Canada. Laws, Statutes, etc.

KE
T2
C36 (2d. Sess.)
17-5 1931
2-100

36410
S·73

INDEX TO BILLS

First Session, Seventeenth Parliament,
(20 Geo.V., 1930)

Second Session, Seventeenth Parliament,
(21-22 Geo.V., 1931)

PART I.

	Bill No.
Aaron, Gordon. Act for relief of,,....	Q.
Acme Assurance Co. Act to incorporate,	C.
Australian Trade Agreement Act, 1931,..	123
Alberta Natural Resources Act (to amend)	84
Algoma Central & Hudson Bay Railway Co, Act respecting, ...	D.
Appropriation Act, No. 1, 1931, ...	17
" " No. 2, 1931, ...	25
" " No. 3, 1931, ...	81
" " No. 4, 1931, ...	124
" " No. 5, 1931, ...	145
Armistice Day Act, (to amend), ...	8
Army & Navy Veterans in Canada (to amend)	K1.
Bank Act (to amend), ...	49
Bankruptcy Act (to amend)	73
" " " (locality of debtor).....	B.
" " " (Priority of Claims)	28
Barder, Annie Bick, Act for relief of,.	Z1
Barlow, Barbara Wallace, (relief of-)..	B1
Beauharnois Light, Heat & Power Co.Ltd. Act respecting-	143
Beauharnois Light, Heat & Power Co.Ltd. (To declare for general advantage of Canada)	144
Berger, Joseph Norman, (relief of-)....	S.

Biological Board Act (to repeal)..... 78

Burrard Inlet Tunnel & Bridge Co.
Act respecting, ... 31

Burrows, Mary Ellen Margaret Montague,
(for relief of-) ..... L.

Bush, Ada Jane Woodhams (relief of-) ... W1.
Canada Evidence Act (to amend) 10
Canada Shipping Act (to amend) 45

Canada Shipping Act, (to amend) 97

Canadian National Railways Act (to amend) 5

Canadian National Railways Financing
Act, 1931, ... 79

Canadian National Railways Guarantee
Act, 1931, ... 83

Canadian National Railways, Act re use
by C.N.R. of tracks etc. of C.P.R.
at Regina, ... 9

Canadian Nationals Act, 1931 24

Canadian Pacific Railway Co.,Act respecting. 15

Canadian Red Cross Society Act (to
amend) 131

Canadian Woodmen of the World. Act
respecting- ..... F.

Checketts, Rosa Maud Thomson,(to relieve-) K.

Chicoutimi Harbour Loan Act, 1931, ... 141

City of Ottawa. Agreement with 80

Civil Service Act (to amend).
(Returned Soldiers' Preference).. 18

Civil Service Act (to amend). (Vacancies,
Outside Service) 132

Companies Act (to amend) 108

Companies Act (to amend) (Auditors).... 33

Consolidated Revenue & Audit Act, (to amend) 102

Cooper, Marjorie Kathleen Younger, (for relief of-) S1

Copyright Act. (to amend) 4

Criminal Code. To amend- (Bail) 46

Criminal Code. To amend- (Cheques without Funds) 43

Criminal Code. To amend - (Escape by flight) ..... G.

Criminal Code. To amend - (Nude parades) 113

Criminal Code. To amend - (Superior Criminal Courts and order of Addresses to Jury) 7

Criminal Code. To amend- (Trade Marks).. 34

Criminal Code. To amend- (Unlawful Assemblies) 19

Customs Act. To amend- 39

Customs Tariff. To amend 111

Dairy Industry Act. To amend- (Increase of Penalties)..... 16

Diamond, Bruce Raymond. (Relief of-).... B2

Dominion Agricultural Credit Co.Ltd. Act respecting 88

Dumaresq, Beatrice Marie. (Relief of-).. F1

Dyson, Lily Adèle Caswell.(Relief of-).. Q1

Eastern Telephone & Telegraph Co.
Act respecting, ... J1

Essex Terminal Railway Co. Act respecting- 23

Evangelical Lutheran Joint Synod,
(to change name to American Lutheran
Church &c.) 52

Finkelstein, Ray. (Relief of-) C1

Fish Inspection Act. To amend- 6

Guaranty Trust Co. of Canada. Act respecting.12

Gauron, Marie Rose Agnès Bélanger.
(Act for relief of-) X1

Graham, Ellen Jane Easton. (Relief of-) .. P.

Grain Insurance & Guarantee Co.
Act respecting- 13

Government Annuities Act. To amend..... D1

Government Employees Compensation Act.
To amend 37

Guttman, Lillian Freedman. (Relief of-)... Z.

Halifax Harbour Commissioners. (Loan-)... 103

Hospital Sweepstakes Act. ..... E.

Income War Tax Act. To amend- 109

Immigration Act. To amend- 44

Interpretation Act. To amend- 105

Johnston, Albert Thompson. (Relief of-).. 01

Judges Act. To amend- 40

Kettle Valley Railway Co. Act respecting- 14

Lawson, Eleanor Fritz. (Relief of-)..... N.

Loan Act, 1931, ... 100

Loggie, Joan Marguerite. (Relief of-) ... U.

Longmore, Rita Margaret Mary.(Relief of-) R.

Macculloch, Emily Hughes. (Relief of-) .. H1

McNaught, Agnes Sarah Evelyn Ballard. (Relief of-) ..... I.

MacNicol, Helen Borland Beattie. (Relief of-) ..... Y.

Mann, Olive Hamley Fraser. (Relief of-). M.

Marshall, Florence. (Relief of-) ..... O.

Martin, Robert Ruff. (Relief of-) M1

Ministers of the Crown. (Re-election).... 35

Montreal and Atlantic Railway Co. Act respecting. 21

Montreal Central Terminal Co. Act respecting- 32

Morris Finance Corporation. To incorporate, L1

Naturalization Act. To amend- 3

New Westminster Harbour Loan Act, 1931 .. 104

North Fraser Harbour Commissioners Amendment Act, 1931..... 139

Northern Alberta Railways Co. Act..... 36

Old Age Pensions Act. To amend..... 136

Ostiguy, Alice Boyne. (Relief of-)..... V.

Pension Act. To amend- 110

Post Office Act. To amend- 107

Post Office Act. To amend 133

Precious Metals Marketing Act, 1928.
To amend- 82

Prisons & Reformatories Act. To amend- .. 72

Rabinovitch, Minnie Fagan. (Relief of-).. Y1

Railway Employees Casualty Insurance Co.
Act respecting ..... H.

Rees, William Henry. (Relief of-)..... G1

Registration Act, 1931 ..... A.

Representation Act. To amend 2

Restigouche Log Driving & Boom Co. Act... 26

Root Vegetables Act. To amend 87

Rosenberg, Ruth. (Relief of-) ..... W.

Royal Canadian Mint Act. 101

Royal Canadian Mounted Police Act.
(To amend) 29

Safety of Life at Sea and Load Line
Conventions Act, 1931, ... 96

Salaries Act. To amend- (Solicitor General) 38

Saint John Harbour Loan Act, 1931 134

Saint Lawrence River Bridge Co. Act..... 30

St. Lawrence River, bridge at Caughnawaga, 22

St. Lawrence River, bridge between the
Island of Orléans and the coast
of Beaupré, ... 77

Sarnia & Port Huron Vehicular Tunnel Company Act. 86

Saskatchewan Natural Resources Act, To amend 85

Scott, Norah Kathleen Nevins. (Relief of) N1

Soldier Settlement Act. To amend- 41

Soldier's Aid Society. To incorporate ... 95

Special War Revenue Act. To amend 106

Subsidiary High Court of the Ancient Order of Foresters in the Dominion of Canada, Act respecting..... 27

Tait, Emma E. (Patent) I1

Tariff Board Act 47

Three Rivers Harbour Loan Act, 1931 135

Ticket of Leave Act. To amend- 11

Trust Companies Act. To amend- 89

Unemployment Relief Act 142

Ventura, Mary Ann. (Relief of-)..... E1

Vocational Education in Canada Act,1931. 53

Vohwinkel, Carl. (Relief of-) ..... T.

Walker, Thora Mary Balfry. (Relief of-). R1

Wapiti Insurance Co. Act U1

Wheat. Act respecting- 140

Whelan, Pearl. (Relief of-)..... A2

White, Isabel Catherine Rohrer.(Relief-) P1

Wilfley & Sons, Inc. (Patent) 20

Wilson, Frank Godsoe. (Relief of-)..... T1

Wiseblatt, Rebecca Jacobs. (Relief of-).. V1

Wolfe, Eileen Sybil. (Relief of-)..... X.

First Session, Seventeenth Parliament, 21 George V, 1930

THE HOUSE OF COMMONS OF CANADA.

BILL 2.

An Act for the granting of aid for the Relief of Unemployment.

AS PASSED BY THE HOUSE OF COMMONS, 15th SEPTEMBER, 1930.

OTTAWA
F. A. ACLAND
PRINTER TO THE KING'S MOST EXCELLENT MAJESTY
13586 1930

1st Session, 17th Parliament, 21 George V, 1930

THE HOUSE OF COMMONS OF CANADA.

BILL 2.

An Act for the granting of aid for the Relief of Unemployment.

Preamble.

WHEREAS unemployment, which is primarily a provincial and municipal responsibility, has become so general throughout Canada as to constitute a matter of national concern, and whereas it is desirable that assistance should be rendered by the Government of Canada towards the relief of such unemployment: Therefore, His Majesty, by and with the advice and consent of the Senate and House of Commons of Canada, enacts as follows:—

Short title.

1. This Act may be cited as *The Unemployment Relief Act, 1930.*

Grant of $20,000,000.

2. For the relief of unemployment, a sum not exceeding twenty million dollars is hereby appropriated and may be paid out of the Consolidated Revenue Fund of Canada for such purposes and under such terms and conditions as may be approved by the Governor in Council.

Purposes to which grant may be applied.

3. Without restricting the generality of the terms of the next preceding section hereof, and notwithstanding the provisions of any statute, the said sum of twenty million dollars may be expended in constructing, extending or improving public works and undertakings, railways, highways, bridges and canals, harbours and wharves; assisting in defraying the cost of distribution of products of the field, farm, forest, sea, lake, river and mine; granting aid to provinces and municipalities in any public work they may undertake for relieving unemployment and reimbursing expenditures made by provinces and municipalities in connection with unemployment, and generally in any way that will assist in providing useful and suitable work for the unemployed.

Report to Parliament.

4. A report shall be laid before Parliament within fifteen days after the opening of the next session thereof, containing a full and correct statement of the monies expended under this Act and the purposes to which they have been applied.

Unexpended portion to lapse.

5. Any portion of the said sum of twenty million dollars, remaining unexpended or unappropriated for the purposes of this Act on the thirty-first day of March, 1931, shall thereupon lapse.

First Session, Seventeenth Parliament, 21 George V, 1930

THE HOUSE OF COMMONS OF CANADA.

BILL 3.

An Act to amend the Customs Act.

First reading, September 15, 1930.

THE MINISTER OF NATIONAL REVENUE.

OTTAWA
F. A. ACLAND
PRINTER TO THE KING'S MOST EXCELLENT MAJESTY
13397 1930

1st Session, 17th Parliament, 21 George V, 1930

THE HOUSE OF COMMONS OF CANADA

BILL 3.

An Act to amend the Customs Act

R.S., c. 42.

HIS MAJESTY, by and with the advice and consent of the Senate and House of Commons of Canada, enacts as follows:—

1. Section thirty-six of the *Customs Act*, chapter forty-two of the Revised Statutes of Canada, 1927, is repealed, and the following is substituted therefor:—

Fair market value.

"**36.** (1) Such market value shall be the fair market value of such goods in the usual and ordinary commercial acceptation of the term, and as sold in the ordinary course of trade,

Not less than wholesale price.

such value in no case to be lower than the selling price thereof to jobbers or wholesalers generally at the time and place of shipment direct to Canada.

Cost plus reasonable profit.

(2) Provided that the value for duty of new or unused goods shall in no case be less than the actual cost of production of similar goods at date of shipment direct to Canada, plus a reasonable advance for selling cost and profit, and the Minister shall be the sole judge of what shall constitute a reasonable advance in the circumstances and his decision thereon shall be final." (New)

2. Section thirty-seven of the said Act is repealed, and the following is substituted therefor:—

Goods of which prices published.

"**37.** In determining the fair market value for duty of goods imported into Canada, the prices of which are published or listed by the manufacturers or producers, or persons acting on their behalf,

Governor in Council may determine.

the Governor in Council may from time to time fix and determine a certain rate of discount which may be applied to such published or listed prices, and such published or listed prices, subject to deduction of the amount of discount according to such rate, shall be deemed and taken to be the fair market values of any such manufactures or productions respectively as are specified in such Order in Council."

EXPLANATORY NOTES.

1. The section to be repealed reads as follows:—

"**36.** Such market value shall be the fair market value of such goods, in the usual and ordinary commercial acceptation of the term, and as sold in the ordinary course of trade: *Provided that a discount for cash for duty purposes, shall not exceed two and one-half per cent and shall not be allowed unless it has been actually allowed and deducted by the exporter on the invoice to the importer.*"

The words underlined and also subsection two on the opposite page are new. The words in italics above are struck out.

2. The section to be repealed reads as follows:—

"**37.** *If any difficulty arises* in determining the fair market value for duty of goods imported into Canada, *which are the manufacture or production of foreign countries or of Great Britain, such as musical instruments, sewing machines, agricultural machines or implements, medical preparations, commonly called patent medicines, and other goods,* the prices of which are published by the manufacturers or producers, or persons acting on their behalf, the Governor in Council may, from time to time, fix and determine a certain rate of discount which may be applied to such published prices of any such manufactures or productions, and such published prices, subject to deduction of the amount of discount according to such rate, shall be deemed and taken to be the fair market values of any such manufactures or productions respectively as are specified in such order in council."

The words in italics above are struck out and the underlined words "or listed" on the opposite page are added.

Discounts.

3. Subsection six of section thirty-eight of the said Act is repealed, and the following is substituted therefor:—

"(6) In estimating the value for duty no discount or deduction shall be allowed which is not shown and allowed on invoices covering sales for home consumption in the country of export in the usual and ordinary course of trade." (New)

Valuation of imports prejudicially or injuriously affecting Canadian producers.

4. Section forty-three of the said Act is repealed, and the following is substituted therefor:—

"**43.** If at any time it appears to the satisfaction of the Governor in Council on a report from the Minister that goods of any kind are being imported into Canada, either on sale or on consignment, under such conditions as prejudicially or injuriously to affect the interests of Canadian producers or manufacturers, the Governor in Council may authorize the Minister to fix the value for duty of any class or kind of such goods, and notwithstanding any other provision of this Act, the value so fixed shall be deemed to be the fair market value of such goods."

3. The subsection to be repealed reads as follows:—

"6. The appraiser, or collector acting as appraiser, in estimating the value for duty may disregard trifling fluctuations in market values occurring after the purchase of the goods by the Canadian importer, and may allow a *bona fide* discount for cash, not exceeding two and one-half per cent, when allowed and deducted by the exporter on his invoice."

4. The section to be repealed reads as follows:—

"**43.** If at any time it appears to the satisfaction of the Governor in Council on a report from the Minister, that *natural products of a class or kind produced in Canada* are being imported into Canada, either on sale or on consignment, under such conditions as prejudicially or injuriously to affect the interests of Canadian producers, the Governor in Council may, *in any case or class of cases*, authorize the Minister to value such goods for duty, notwithstanding any other provisions of this Act, and the value so *determined* shall be held to be the fair market value thereof."

The words in italics above are struck out and the words underlined on the opposite page are new.

Second Session, Seventeenth Parliament, 21 George V, 1931

THE HOUSE OF COMMONS OF CANADA

BILL 2.

An Act to amend the Representation Act.

First reading, March 16, 1931.

MR. HEENAN.

OTTAWA
F. A. ACLAND
PRINTER TO THE KING'S MOST EXCELLENT MAJESTY
23660 1931

2nd Session, 17th Parliament, 21 George V, 1931

THE HOUSE OF COMMONS OF CANADA

BILL 2.

An Act to amend the Representation Act.

R.S., c. 176.

HIS Majesty, by and with the advice and consent of the Senate and House of Commons of Canada, enacts as follows:—

1. The Schedule to the *Representation Act*, chapter one hundred and seventy-six of the Revised Statutes of Canada, 1927, is amended as follows:—

Paragraph twenty-eight of the said Schedule, which describes the electoral district of Kenora-Rainy River in the Province of Ontario, is repealed, and the following is substituted therefor:—

Kenora-Rainy River.

"28. KENORA-RAINY RIVER consisting of those parts of the territorial district of Kenora, Rainy River and Patricia lying west of the fifth meridian passing between the townships of Melgund and Revell and its projection northerly to the northern boundary of Ontario."

Explanatory Note

The purpose of this amendment is to provide representation for electors resident in the district of Patricia north of the electoral district of Kenora-Rainy River.

The description, therefore, of the electoral district of Kenora-Rainy River is amended to include that part of the district of Patricia immediately north of the said electoral district. The underlined words in the text of the Bill show the proposed changes.

Second Session, Seventeenth Parliament, 21 George V, 1931

THE HOUSE OF COMMONS OF CANADA.

BILL 3.

An Act to amend the Naturalization Act.

First reading, March 17, 1931.

THE SECRETARY OF STATE.

OTTAWA
F. A. ACLAND
PRINTER TO THE KING'S MOST EXCELLENT MAJESTY
22335 1931

2nd Session, 17th Parliament, 21 George V, 1931

THE HOUSE OF COMMONS OF CANADA.

BILL 3.

An Act to amend the Naturalization Act.

R.S., c. 138.

HIS Majesty, by and with the advice and consent of the Senate and House of Commons of Canada, enacts as follows:—

1. Section thirteen of the *Naturalization Act*, chapter one hundred and thirty-eight of the Revised Statutes of Canada, 1927, is repealed, and the following is substituted therefor:—

National status of married women.

"**13.** (1) The wife of a British subject shall be deemed to be a British subject, and the wife of an alien shall be deemed to be an alien, except as in this section otherwise provided.

Marriage of woman with an alien.

(2) A woman, having been a British subject, shall not be deemed to have ceased to be a British subject upon her marriage with an alien, except upon condition that in consequence of such marriage she acquires the nationality of her husband.

Where man ceases to be a British subject.

(3) Where a man, during the continuance of his marriage, ceases to be a British subject, his wife shall not be deemed to have ceased to be a British subject, except upon condition that in consequence of such change in the nationality of the husband she acquires his new nationality; and, in any case, when the husband ceases to be a British subject, it shall be lawful for his wife to make and file with the Minister a declaration that she desires to remain a British subject, and thereupon she shall be deemed to retain her status as a British subject.

Wife may remain British Subject.

Wife's consent necessary to change in her nationality.

(4) The naturalization of the husband during marriage under Part II of this Act shall not involve a change in the nationality of the wife except with her written consent.

Declaration by wife of alien of desire to resume status of British subject.

(5) Where an alien is a subject of a State at war with His Majesty it shall be lawful for his wife, if she was at birth a British subject, to make a declaration that she desires to resume her status as a British subject, and thereupon the Minister, if he is satisfied that it is desirable that she be permitted to do so, may grant her a certificate of naturalization."

Second Session, Seventeenth Parliament, 21 George V, 1931

THE HOUSE OF COMMONS OF CANADA

BILL 4.

An Act to amend the Copyright Act.

First reading, March 18, 1931.

THE SECRETARY OF STATE.

OTTAWA
F. A. ACLAND
PRINTER TO THE KING'S MOST EXCELLENT MAJESTY
22400 1931

2nd Session, 17th Parliament, 21 George V, 1931

THE HOUSE OF COMMONS OF CANADA.

BILL 4.

An Act to amend the Copyright Act.

HIS Majesty, by and with the advice and consent of the Senate and House of Commons of Canada, enacts as follows:—

Short title.

1. This Act may be cited as *The Copyright Amendment Act, 1931.*

2. (1) The *Copyright Act*, chapter thirty-two of the Revised Statutes of Canada, 1927, is amended by inserting the two following paragraphs immediately after paragraph *(t)* of the second section thereof:—

"Literary, dramatic, musical and artistic work."

"*(u)* 'Every original literary, dramatic, musical and artistic work' shall include every production in the literary, scientific and artistic domain, whatever may be the mode or form of its expression, such as books, pamphlets and other writings, lectures, dramatic or dramatico-musical works, musical works or compositions with or without words, illustrations, sketches, and plastic works relative to geography, topography, architecture or science;

"Work."

"*(v)* 'work' shall include the title thereof when such title has other than a general, geographically descriptive or commonplace meaning."

"Legal representatives."

(2) Paragraph *(m)* of section two of the said Act is repealed and the following paragraph is substituted therefor:

"*(m)* 'legal representatives' includes heirs, executors, administrators, successors and assigns, or agents or attorneys who are thereunto duly authorized in writing;"

"Performance."

(3) Paragraph *(q)* of section two of the said Act is repealed and the following paragraph is substituted therefor:—

"*(q)* 'performance' means any acoustic representation of a work or any visual representation of any dramatic action in a work, including a representation made by means of any mechanical instrument or by radio communication."

3. The first subsection of section three of said Act is hereby amended by inserting therein immediately after paragraph *(d)* thereof the two following paragraphs:—

"Copyright": further defined.

"*(e)* In the case of any literary, dramatic, musical or artistic work, to reproduce, adapt and publicly present such work by cinematograph; provided that the author has given such work an original character; and provided also that if such original character is absent the cinematographic production shall be protected as a photograph;

(f) In case of any literary, dramatic, musical or artistic work, to communicate such work by radio communication."

4. Section eight of said Act is hereby repealed, and the following section is substituted therefor:—

Cases of joint authorship.

"**8.**(1) In the case of a work of joint authorship, copyright shall subsist during the life of the author who dies last and for a term of fifty years after his death, and references in this Act to the period after the expiration of any specified number of years from the death of the author shall be construed as references to the period after the expiration of the like number of years from the death of the author who dies last, and in the provisions of this Act with respect to the grant of compulsory licences a reference to the date of the death of the author who dies last shall be substituted for the date of the death of the author.

(2) Authors who are nationals of any country which grants a term of protection shorter than that mentioned in subsection two of this section shall not be entitled to claim a longer term of protection in Canada."

5. Section twelve of said Act is hereby amended by adding thereto the following subsection:—

Author's right to restrain acts prejudicial to his honour or reputation.

"(5) Independently of the author's copyright, and even after the assignment, either wholly or partially, of the said copyright, the author shall have the right to claim authorship of the work, as well as the right to restrain the publication of any distortion, mutilation or other modification of the said work which would be prejudicial to his honour or reputation."

6. The first subsection of section twenty of said Act is amended by adding thereto the following:—

Assessment of damages.

"Provided that if any person shall infringe the copyright in any work which is protected under the provisions of this Act such person shall be liable to pay such damages to the owner of the right infringed as he may have suffered due to the infringement, as well as all or such part of the profits which the infringer shall have made from such

infringement as the court may decide to be just and proper; and in proving profits the plaintiff shall be required to prove only receipts or revenues derived from the publication, sale or other disposition of an infringing work, or from any unauthorized performance of the work in which copyright subsists; and the defendant shall be required to prove every element of cost which he claims."

7. Section twenty of the said Act is also hereby amended by adding thereto the two following subsections:—

Protection of separate rights.

"(4) The author or other owner of any copyright or any person or persons deriving any right, title or interest by assignment or grant in writing from any author or other owner as aforesaid, may each, separately for himself, in his own name as party to a suit, action, or proceeding, protect and enforce such rights as he may hold, and to the extent of his right, title, and interest is entitled to the remedies provided by this Act.

Concurrent jurisdiction of Exchequer Court.

(5) The Exchequer Court of Canada shall have concurrent jurisdiction with provincial courts to hear and determine all civil actions, suits, or proceedings which may be instituted for violation of any of the provisions of this Act or to enforce the civil remedies provided by this Act."

8. Section thirty of the said Act is hereby repealed and the following is substituted therefor:—

Powers of Commissioner and Registrar.

"**30.** The Commissioner of Patents shall exercise the powers conferred and perform the duties imposed upon him by this Act under the direction of the Minister, and, in the absence or inability to act of the Commissioner of Patents, the Registrar of Copyrights or other officer temporarily appointed by the Minister, may, as Acting Commissioner, exercise such powers and perform such duties under the direction of the Minister."

9. Section forty of said Act is hereby repealed and the following section is substituted therefor:—

Registration of assignments, grants and instruments.

"**40.** (1) Assignments, grants, licences and mortgages of copyright or of any separate right, title or interest therein, or any other instrument or paper writing relating to or affecting a copyright or any right, title or interest therein, may be registered in the Copyright Office at any time after execution; Provided that failure so to register shall not affect the validity of any such instrument; and provided also that no unregistered assignment, grant, licence, mortgage or other instrument shall be valid or of any effect against any previously registered assignment, grant, licence, mortgage or instrument to an assignee, grantee, licensee, or other transferee for value and without notice, whether such unregistered instrument be prior in date of execution or not, and whether subsequently registered or not.

Execution of instruments in United Kingdom, Dominions, or in United States.

(2) Any instruments referred to in this section may be executed, subscribed and acknowledged at any place in the United Kingdom or in any of His Majesty's dominions, colonies or possessions, or in the United States of America, by the assignor, grantor, licensor or mortgagor, before any notary public, commissioner or other official or the judge of any court, who is authorized by law to administer oaths or perform notarial acts in such place, and who also subscribes his signature and affixes thereto or impresses thereon his official seal or the seal of the court of which he is such judge.

Execution of instruments in foreign countries.

(3) Any such instrument executed in any other foreign country by the assignor, grantor, licensor or mortgagor may be acknowledged or subscribed by the parties thereto before any notary public, commissioner, or other official or judge of any court of such foreign country, who is authorized to administer oaths or perform notarial acts in such foreign country and whose authority shall be proved by the certificate of a diplomatic or consular officer of the United Kingdom or of Canada exercising his functions in such foreign country.

Seals to be *prima facie* evidence.

(4) Such official seal or seal of the court or such certificate of a diplomatic or consular officer shall be *prima facie* evidence of the execution of the instrument; and the instrument with such seal or certificate affixed or attached thereto shall be admissible as evidence in any action or proceeding brought under this Act."

Performing rights.

10. (1) Each and every association, society or company which carries on in Canada, either as principal or agent, the business of acquiring, assigning, granting or licensing copyrights or of any separate interest therein, or which deals with the issue or grant of licences for the performance in Canada of any literary, dramatic, musical or artistic work in which copyright subsists under the provisions of the *Copyright Act* as amended by this Act, shall, from time to time, file with the Minister at the Copyright Office:—

Complete lists of work to be filed.

(a) Complete lists of all literary, dramatic, musical and artistic works, in respect of which such association, society or company claims authority to issue or grant licences or to collect fees, charges or royalties for the performance of such works in Canada; and

Statement of fees, charges and royalties.

(b) A statement of all fees, charges or royalties which such society, association or company proposes to collect in compensation for the issue or grant of licences in respect of the performance of each of such works in Canada.

Revision of fees, charges and royalties by Governor in Council.

(2) The Governor in Council, on the recommendation of the Minister, is authorized from time to time to revise, reduce, increase or otherwise prescribe the fees, charges or royalties which any such society, association or company

may lawfully collect in respect of the issue or grant by it of licences for the performance of any of such works in Canada.

No excess fees, charges or royalties permitted.

(3) No such society, association or company shall be entitled to sue for or to collect in any legal proceedings any fees, charges or royalties in respect of licences for the performance of any such works in Canada which are not specified in the lists from time to time filed by it at the Copyright Office as herein provided, nor to sue for or collect in any legal proceedings any fees, charges or royalties in excess of those specified in the statements so filed by it, or those otherwise prescribed by Order of the Governor in Council.

Performance by churches, colleges, etc.

11. Nothing contained in the *Copyright Act* nor in this Act shall be construed to prohibit the performance of any musical works in which copyright subsists by churches, colleges, schools, or by philanthropic, charitable or fraternal organizations, provided the performance is given for religious, educational, benevolent or charitable purposes.

Copies for Library.

12. The publisher of every book published in Canada, within three months after the publication thereof, shall deliver or cause to be delivered, at his own expense, to the Librarian of Parliament, who shall give a written receipt therefor, two copies of the first edition and two copies of each subsequent edition if such subsequent edition contains additions or alterations either in the letter press or in the maps, prints or other engravings thereto belonging.

Regulations and forms.

13. Section forty-four of the *Copyright Act* shall apply to said Act as amended by this Act.

Adherence to Rome Copyright Convention.

14. The Governor in Council may take such action as may be deemed necessary to secure the adherence of Canada to the revised Convention for the protection of artistic and literary works which was signed at Rome the second day of June, 1928, as set out in Schedule A to this Act.

SCHEDULE A

THE ROME COPYRIGHT CONVENTION, 1928.

The International Convention for the protection of literary and artistic works signed at Berne on the 9th September, 1886, and revised at Berlin on the 13th November, 1908, was further revised by the Copyright Convention which was signed at Rome on the 2nd June, 1928.

The following is an English translation of the Convention signed at Rome with the omission of the formal beginning and end:—

Article 1.

The countries to which the present convention applies are constituted into a Union for the protection of the rights of authors over their literary and artistic works.

Article 2.

(1) The term "literary and artistic works" shall include every production in the literary, scientific and artistic domain, whatever may be the mode or form of its expression, such as books, pamphlets and other writings; lectures, addresses, sermons and other works of the same nature; dramatic or dramatico-musical works, choreographic works and entertainments in dumb show, the acting form of which is fixed in writing or otherwise; musical compositions with or without words; works of drawing, painting, architecture, sculpture, engraving and lithography; illustrations, geographical charts, plans, sketches, and plastic works relative to geography, topography, architecture or science.

(2) Translations, adaptations, arrangements of music and other reproductions in an altered form of a literary or artistic work, as well as collections of different works, shall be protected as original works without prejudice to the rights of the author of the original work.

(3) The countries of the Union shall be bound to make provision for the protection of the above-mentioned works.

(4) Works of art applied to industrial purposes shall be protected so far as the domestic legislation of each country allows.

Article 2 bis.

(1) The right of partially or wholly excluding political speeches and speeches delivered in legal proceedings from the protection provided by the preceding article is reserved for the domestic legislation of each country of the Union.

(2) The right of fixing the conditions under which lectures, addresses, sermons and other works of the same

nature may be reproduced by the press is also reserved for the domestic legislation of each country of the Union. Nevertheless the author shall have the sole right of making a collection of the said works.

ARTICLE 3.

The present Convention shall apply to photographic works and to works produced by a process analogous to photography. The countries of the Union shall be bound to make provision for their protection.

ARTICLE 4.

(1) Authors who are nationals of any of the countries of the Union shall enjoy in countries other than the country of origin of the work, for their works, whether unpublished or first published in a country of the Union, the rights which the respective laws do now or may hereafter grant to natives, as well as the rights specially granted by the present Convention.

(2) The enjoyment and the exercise of these rights shall not be subject to the performance of any formality; such enjoyment and such exercise are independent of the existence of protection in the country of origin of the work. Consequently, apart from the express stipulations of the present Convention, the extent of protection, as well as the means of redress secured to the author to safeguard his rights, shall be governed exclusively by the laws of the country where protection is claimed.

(3) The country of origin of the work shall be considered to be: in the case of unpublished works, the country to which the author belongs; in the case of published works, the country of first publication; and in the case of works published simultaneously in several countries of the Union, the country the laws of which grant the shortest term of protection. In the case of works published simultaneously in a country outside the Union and in a country of the Union, the latter country shall be considered exclusively as the country of origin.

(4) By "published works" must be understood, for the purposes of the present Convention, works copies of which have been issued to the public. The representation of a dramatic or dramatico-musical work, the performance of a musical work, the exhibition of a work of art, and the construction of a work of architecture shall not constitute a publication.

ARTICLE 5.

Authors who are nationals of one of the countries of the Union and who first publish their works in another country

of the Union shall have in the latter country the same rights as native authors.

ARTICLE 6.

(1) Authors who are not nationals of one of the countries of the Union, and who first publish their works in one of those countries, shall enjoy in that country the same rights as native authors, and in the other countries of the Union the rights granted by the present Convention.

(2) Nevertheless, where any country outside the Union fails to protect in an adequate manner the works of authors who are nationals of one of the countries of the Union, the latter country may restrict the protection given to the works of authors who are at the date of the first publication thereof nationals of the other country and are not effectively domiciled in one of the countries of the Union.

(3) No restrictions introduced by virtue of the preceding paragraph shall in any way affect the rights which an author may have acquired in respect of a work published in a country of the Union before such restrictions were put in force.

(4) The countries of the Union which restrict the grant of copyright in accordance with the present article shall give notice thereof to the Government of the Swiss Confederation by a written declaration specifying the countries in regard to which protection is restricted and the restrictions to which rights of authors who are nationals of those countries are subjected. The Government of the Swiss Confederation will immediately communicate this declaration to all the countries of the Union.

ARTICLE 6 bis.

(1) Independently of the author's copyright, and even after transfer of the said copyright, the author shall have the right to claim authorship of the work, as well as the right to object to any distortion, mutilation or other modification of the said work which would be prejudicial to his honour or reputation.

(2) The determination of the conditions under which these rights shall be exercised is reserved for the national legislation of the countries of the Union. The means of redress for safeguarding these rights shall be regulated by the legislation of the country where protection is claimed.

ARTICLE 7.

(1) The term of protection granted by the present Convention shall be the life of the author and fifty years after his death.

(2) Nevertheless, in case such term of protection should not be uniformly adopted by all the countries of the Union, the term shall be regulated by the law of the country where protection is claimed, and must not exceed the term fixed in the country of origin of the work. Consequently the countries of the Union shall only be bound to apply the provisions of the preceding paragraph in so far as such provisions are consistent with their domestic laws.

(3) For photographic works and works produced by a process analogous to photography, for posthumous works, for anonymous or pseudonymous works, the term of protection shall be regulated by the law of the country where protection is claimed, provided that the said term shall not exceed the term fixed in the country of origin of the work.

ARTICLE 7 bis.

(1) The term of copyright protection belonging in common to joint authors of a work shall be calculated according to the date of the death of the author who dies last.

(2) Authors who are nationals of the countries which grant a term of protection shorter than that mentioned in paragraph (1) cannot claim a longer term of protection in the other countries of the Union.

(3) In no case may the term of protection expire before the death of the author who dies last.

ARTICLE 8.

The authors of unpublished works, who are nationals of one of the countries of the Union, and the authors of works first published in one of those countries, shall enjoy, in the other countries of the Union, during the whole term of the right in the original work, the exclusive right of making or authorizing a translation of their works.

ARTICLE 9.

(1) Serial stories, tales, and all other works, whether literary, scientific, or artistic, whatever their object, published in the newspapers or periodicals of one of the countries of the Union may not be reproduced in the other countries without the consent of the authors.

(2) Articles on current economic, political or religious topics may be reproduced by the press unless the reproduction thereof is expressly reserved. Nevertheless the source must always be clearly indicated; the legal consequences of the breach of this obligation shall be determined by the laws of the country where protection is claimed.

(3) The protection of the present Convention shall not apply to news of the day or to miscellaneous information which is simply of the nature of items of news.

ARTICLE 10.

As regards the liberty of extracting portions from literary or artistic works for use in publications destined for educational purposes, or having a scientific character, or for chrestomathies, the effect of the legislation of the countries of the Union and of special arrangements existing, or to be concluded, between them is not affected by the present Convention.

ARTICLE 11.

(1) The stipulations of the present Convention shall apply to the public representation of dramatic or dramatico-musical works and to the public performance of musical works, whether such works be published or not.

(2) Authors of dramatic or dramatico-musical works shall be protected during the existence of their right over the original work against the unauthorized public representation of translations of their works.

(3) In order to enjoy the protection of the present Article, authors shall not be bound in publishing their works to forbid the public representation or performance thereof.

ARTICLE 11 bis.

(1) Authors of literary and artistic works shall enjoy the exclusive right of authorizing the communication of their works to the public by radiocommunication.

(2) The national legislations of the countries of the Union may regulate the conditions under which the right mentioned in the preceding paragraph shall be exercised, but the effect of those conditions will be strictly limited to the countries which have put them in force. Such conditions shall not in any case prejudice the moral right (droit moral) of the author, nor the right which belongs to the author to obtain an equitable remuneration which shall be fixed, failing agreement, by the competent authority.

ARTICLE 12.

The following shall be specially included among the unlawful reproductions to which the present Convention applies: Unauthorized indirect appropriations of a literary or artistic work, such as adaptations, musical arrangements, transformations of a novel, tale, or piece of poetry, into a dramatic piece and vice versa, etc., when they are only the reproduction of that work, in the same form or in another form, without essential alterations, additions, or abridgments and do not present the character of a new original work.

ARTICLE 13.

(1) The authors of musical works shall have the exclusive right of authorizing (1) the adaptation of those works to instruments which can reproduce them mechanically; (2) the public performance of the said works by means of these instruments.

(2) Reservations and conditions relating to the application of this Article may be determined by the domestic legislation of each country in so far as it is concerned; but the effect of any such reservations and conditions will be strictly limited to the country which has put them in force.

(3) The provisions of paragraph (1) shall not be retroactive, and consequently shall not be applicable in any country of the Union to works which have been lawfully adapted in that country to mechanical instruments before the coming into force of the Convention signed at Berlin on the 13th November, 1908, and in the case of a country which has acceded to the Union since that date, or accedes in the future, before the date of its accession.

(4) Adaptations made in virtue of paragraphs (2) and (3) of the present Article, and imported without the authority of the interested parties into a country where they would not be lawful, shall be liable to seizure in that country.

ARTICLE 14.

(1) Authors of literary, scientific or artistic works shall have the exclusive right of authorizing the reproduction, adaptation and public presentation of their works by cinematography.

(2) Cinematographic productions shall be protected as literary or artistic works if the author has given the work an original character. If this character is absent the cinematographic production shall enjoy protection as a photographic work.

(3) Without prejudice to the rights of the author of the work reproduced or adapted, a cinematographic work shall be protected as an original work.

(4) The above provisions apply to reproduction or production effected by any other process analogous to cinematography.

ARTICLE 15.

(1) In order that the authors of works protected by the present Convention shall, in the absence of proof to the contrary, be considered as such, and be consequently admitted to institute proceedings against pirates before the Courts of the various countries of the Union, it will be sufficient that their name be indicated on the work in the accustomed manner.

(2) For anonymous or pseudonymous works the publisher whose name is indicated on the work shall be entitled to protect the rights belonging to the author. He shall be, without other proof, deemed to be the legal representative of the anonymous or pseudonymous author.

ARTICLE 16.

(1) Pirated works may be seized by the competent authorities of any country of the Union where the original work enjoys legal protection.

(2) In such a country the seizure may also apply to reproductions imported from a country where the work is not protected, or has ceased to be protected.

(3) The seizure shall take place in accordance with the domestic legislation of each country.

ARTICLE 17.

The provisions of the present Convention cannot in any way derogate from the right belonging to the Government of each country of the Union to permit, to control, or to prohibit, by measures of domestic legislation or police, the circulation, representation, or exhibition of any works or productions in regard to which the competent authority may find it necessary to exercise that right.

ARTICLE 18.

(1) The present Convention shall apply to all works which at the moment of its coming into force have not yet fallen into the public domain in the country of origin through the expiration of the term of protection.

(2) If, however, through the expiration of the term of protection which was previously granted, a work has fallen into the public domain of the country where protection is claimed, that work shall not be protected anew in that country.

(3) The application of this principle shall take effect according to the stipulations contained in special Conventions existing, or to be concluded, to that effect between countries of the Union. In the absence of such stipulations, the respective countries shall regulate, each in so far as it is concerned, the manner in which the said principle is to be applied.

(4) The above provisions shall apply equally in case of new accessions to the Union, and also in the event of the term of protection being extended by the application of Article 7 or by abandonment of reservations.

ARTICLE 19.

The provisions of the present Convention shall not prevent a claim being made for the application of any wider provisions which may be made by the legislation of a country of the Union in favour of foreigners in general.

ARTICLE 20.

The Governments of the countries of the Union reserve to themselves the right to enter into special arrangements between each other, provided always that such arrangements confer upon authors more extended rights than those granted by the Union, or embody other stipulations not contrary to the present Convention. The provisions of existing arrangements which answer to the above-mentioned conditions shall remain applicable.

ARTICLE 21.

(1) The International Office established under the name of the "Office of the International Union for the Protection of Literary and Artistic Works" shall be maintained.

(2) That Office is placed under the high authority of the Government of the Swiss Confederation, which regulates its organization and supervises its working.

(3) The official language of the Office shall be French.

ARTICLE 22.

(1) The International Office collects every kind of information relative to the protection of the rights of authors over their literary and artistic works. It arranges and publishes such information. It undertakes the study of questions of general interest concerning the Union, and, by the aid of documents placed at its disposal by the different Administrations, edits a periodical publication in the French language on the questions which concern the objects of the Union. The Governments of the countries of the Union reserve to themselves the power to authorize by common accord the publication by the Office of an edition in one or more other languages, if experience should show this to be requisite.

(2) The International Office will always hold itself at the disposal of members of the Union with the view to furnish them with any special information which they may require relative to the protection of literary and artistic works.

(3) The Director of the International Office shall make an annual Report on his Administration, which shall be communicated to all the members of the Union.

ARTICLE 23.

(1) The expenses of the Office of the International Union shall be shared by the countries of the Union. Until a fresh arrangement be made, they cannot exceed the sum of 120,000 Swiss francs a year. This sum may be increased, if necessary, by the unanimous decision of one of the Conferences provided for in Article 24.

(2) The share of the total expense to be paid by each country shall be determined by the division of the countries of the Union and those subsequently acceding to the Union into six classes, each of which shall contribute in the proportion of a certain number of units, viz.:—

	Units
1st class	25
2nd class	20
3rd class	15
4th class	10
5th class	5
6th class	3

(3) These coefficients are multiplied by the number of countries of each class, and the total product thus obtained gives the number of units by which the total expense is to be divided. The quotient gives the amount of the unit of expense.

(4) Each country shall declare, at the time of its accession, in which of the said classes it desires to be placed, but it may subsequently declare that it wishes to be placed in another class.

(5) The Swiss Administration prepares the Budget of the Office, superintends its expenditure, makes the necessary advances, and draws up the annual account which shall be communicated to all the other Administrations.

ARTICLE 24.

(1) The present Convention may be submitted to revisions in order to introduce therein amendments calculated to perfect the system of the Union.

(2) Questions of this kind, as well as those which are of interest to the Union in other respects, shall be considered in Conferences to be held successively in the countries of the Union by delegates of the said countries. The Administration of the country where a Conference is to meet prepares, with the assistance of the International Office, the programme of the Conference. The Director of the Office shall attend at the sittings of the Conferences, and shall take part in the discussions without the right to vote.

(3) No alteration in the present Convention shall be binding on the Union except by the unanimous consent of the countries composing it.

ARTICLE 25.

(1) Countries outside the Union which make provision for the legal protection of the rights forming the object of the present Convention may accede thereto on request to that effect.

(2) Such accession shall be notified in writing to the Government of the Swiss Confederation, who will communicate it to all the other countries of the Union.

(3) Such accession shall imply full adhesion to all the clauses and admission to all the advantages provided by the present Convention, and shall take effect one month after the date of the notification made by the Government of the Swiss Confederation to the other unionist countries, unless some later date has been indicated by the adhering country. In may, nevertheless, contain an indication that the adhering country wishes to substitute, provisionally at least, for Article 8, which relates to translations, the provisions of Article 5 of the Convention of 1886 revised at Paris in 1896, on the understanding that those provisions shall apply only to translations into the language or languages of that country.

ARTICLE 26.

(1) Any country of the Union may at any time notify in writing to the Government of the Swiss Confederation that the present Convention shall apply to all or any of its colonies, protectorates, territories under mandate or any other territories subject to its sovereignty or to its authority, or any territories under suzerainty, and the Convention shall thereupon apply to all the territories named in such notification. Failing such notification, the Convention shall not apply to any such territories.

(2) Any country of the Union may at any time notify in writing to the Government of the Swiss Confederation that the present Convention shall cease to apply to all or any of the territories which have been made the subject of a notification under the preceding paragraph, and the Convention shall cease to apply in the territories named in the notification given under this paragraph twelve months after the receipt of the latter notification by the Government of the Swiss Confederation.

(3) All notifications given to the Government of the Swiss Confederation in accordance with the provisions of paragraphs (1) and (2) of the present article shall be communicated by that Government to all the countries of the Union.

ARTICLE 27.

(1) The present Convention shall replace, in regard to the relations between the countries of the Union, the Convention of Berne of the 9th September, 1886, and the subsequent revisions thereof. The instruments previously in force shall continue to be applicable in regard to relations with countries which do not ratify the present Convention.

(2) The countries on whose behalf the present Convention is signed may retain the benefit of the reservations which they have previously formulated on condition that they make a declaration to that effect at the time of the deposit of their ratifications.

(3) The countries which are actually members of the Union, but on whose behalf the present Convention is not signed may adhere to the Convention at any time. In that event they may enjoy the benefit of the provisions of the preceding paragraph.

ARTICLE 28.

(1) The present Convention shall be ratified, and the ratifications deposited at Rome, not later than the 1st July, 1931.

(2) It shall come into force, between the countries which have ratified it, one month after that date, nevertheless, if before that date, it has been ratified by at least six countries of the Union, it shall come into force between those countries one month after the deposit of the sixth ratification has been notified to them by the Government of the Swiss Confederation and, in the case of countries which ratify thereafter, one month after the notification of each of such ratifications.

(3) Until the 1st August, 1931, countries outside the Union may accede to the Union by adhering either to the Convention signed at Berlin on the 13th November, 1908, or to the present Convention. On or after the 1st August, 1931, they may adhere only to the present Convention.

ARTICLE 29.

(1) The present Convention shall remain in force for an indefinite period until the termination of a year from the day on which it may have been denounced.

(2) Such denunciation shall be made to the Government of the Swiss Confederation. It shall only take effect in regard to the country making it, the Convention remaining in full force and effect for the other countries of the Union.

ARTICLE 30.

(1) The countries which shall introduce in their legislation the duration of protection for fifty years contemplated by Article 7, paragraph (1), of the present Convention, shall give notice thereof in writing to the Government of the Swiss Confederation, who will communicate it at once to all the other countries of the Union.

(2) The same procedure shall be followed in the case of the countries renouncing the reservations made or maintained by them in virtue of Articles 25 and 27.

In faith whereof the respective Plenipotentiaries have signed the present Convention.

Done at Rome, the 2nd day of June, 1928, in a single copy, which shall be deposited in the archives of the Royal Italian Government. A copy, duly certified, shall be transmitted by the diplomatic channel to each country of the Union.

Second Session, Seventeenth Parliament, 21 George V, 1931

THE HOUSE OF COMMONS OF CANADA.

BILL 5.

An Act to amend the Canadian National Railways Act.

First reading, March 18, 1931.

The MINISTER OF RAILWAYS AND CANALS.

OTTAWA
F. A. ACLAND
PRINTER TO THE KING'S MOST EXCELLENT MAJESTY
1931

23582

2nd Session, 17th Parliament, 21 George V, 1931

THE HOUSE OF COMMONS OF CANADA.

BILL 5.

An Act to amend the Canadian National Railways Act.

R.S., c. 172.

HIS Majesty, by and with the advice and consent of the Senate and House of Commons of Canada, enacts as follows:—

1. Subsection one of section three of the *Canadian National Railways Act*, chapter one hundred and seventy-two of the Revised Statutes of Canada, 1927, is repealed and the following is substituted therefor:—

Nomination of directors.

"**3.** (1) The Governor in Council may nominate such persons as may be deemed expedient, not less than five, nor more than seventeen, to be directors of the Company hereby incorporated, and upon such nomination being made the persons so nominated, and their successors, and such other persons as may from time to time be nominated by the Governor in Council as directors, shall be and are hereby incorporated as a company, under the name of "Canadian National Railway Company," hereinafter called "the Company"."

2. Section thirty-four of the said Act is repealed and the following is substituted therefor:—

Inquiry and report regarding company or operation of Government Railways.

"**34.** The Minister of Railways and Canals may appoint or direct any person to enquire into and report upon any matters or things relating to or affecting the Company or its works and undertakings, including its management and operation of the Government Railways, or relating to or affecting any other company and the works and undertakings thereof, owned, controlled or operated by the Company, and any person so appointed or directed may, for the purposes of and in connection with any such enquiry or report, do all such things and exercise all such powers as are referred to or mentioned in section seventy of the Railway Act."

EXPLANATORY NOTES.

1. Subsection one of section three of the Canadian National Railways Act reads as follows:—

"**3.** The Governor in Council may nominate such persons as may be deemed expedient, not less than five, nor more than *fifteen*, to be directors of the Company hereby incorporated, and upon such nomination being made the persons so nominated, and their successors, and such other persons as may from time to time be nominated by the Governor in Council as directors, shall be and are hereby incorporated as a company, under the name of "Canadian National Railway Company," hereinafter called "the Company."

The proposed amendment of the said subsection is to the effect of increasing the number of directors of the Canadian National Railway Company that may be appointed from fifteen to seventeen by substituting the word "*seventeen*" for the word "*fifteen*" where it appears in the subsection.

2. Section thirty-four of the Canadian National Railways Act reads as follows:—

"**34.** The Minister of Railways and Canals may appoint or direct any person to enquire into and report upon any matters or things relating to or affecting the Company or its works and undertakings, including its management and operation of the Government Railways, or relating to or affecting any other company and the works and undertakings thereof, owned, controlled or operated by the Company, and any person so appointed or directed may, for the purposes of and in connection with any such enquiry or report, do all such things and exercise all such powers as are referred to or mentioned in section *sixty-one* of the Railway Act."

The proposed amendment of the said section is to the effect of correcting an error in the Canadian National Railways Act, as enacted in the Revised Statutes of 1927 where reference is made to Section "*sixty-one*" of the Railway Act instead of Section "*seventy*" thereof, by substituting the word "*seventy*" for the word "*sixty-one*" where it appears in the section.

Second Session, Seventeenth Parliament, 21 George V, 1931.

THE HOUSE OF COMMONS OF CANADA.

BILL 6.

An Act to amend the Fish Inspection Act.

First reading, March 18, 1931.

The MINISTER OF FISHERIES.

OTTAWA
F. A. ACLAND
PRINTER TO THE KING'S MOST EXCELLENT MAJESTY
23476 1931

2nd Session, 17th Parliament, 21 Geo. V, 1931

THE HOUSE OF COMMONS OF CANADA.

BILL 6.

An Act to amend the Fish Inspection Act.

R.S., c. 72.

HIS Majesty, by and with the advice and consent of the Senate and House of Commons of Canada, enacts as follows:—

1. Subsections one and two of section eight of the *Fish Inspection Act*, chapter seventy-two of the Revised Statutes of Canada, 1927, are hereby repealed and the following is substituted therefor:—

Containers must be inspected.

"**8.** (1) All containers used for packing such fish as come under the provisions of this Act and such other fish and fish oils as may hereafter come under such provisions, shall be made and marked by the maker in accordance with the regulations, and such containers shall not be used, sold, bought or shipped unless they have been inspected and marked by an inspecting officer, provided that boxes for smoked herring and boxes for dry salted herring shall not be inspected and marked until they have been packed and made ready for shipment.

Fish must be inspected.

(2) Such fish as come under the provisions of this Act shall be cured, graded and packed, and such fish oils as may hereafter come under the provisions of this Act shall be graded, and the containers thereof marked by the packer or producer in accordance with the regulations, and such fish and fish oils shall not be sold, bought or shipped unless they have been inspected and the containers thereof marked by an inspecting officer."

2. Subsection one of section nine of the said Act is hereby repealed and the following is substituted therefor:—

Imported fish.

"**9.** (1) All fish imported into Canada from other countries shall be packed in containers of a similar character and equal quality to those required in this Act and shall be clearly marked with the kind, grade and weight of fish they contain, and with the name of the country of origin, including the name and address of the packer, or the license number of the packer."

Explanatory Notes.

The *Fish Inspection Act*, chapter 72 of the Revised Statutes of Canada, 1927, requires that barrels or other containers of such fish as come under the provisions of the Act, be made in accordance with defined standards, that the fish be cured, graded and packed as prescribed in the regulations, and that the marks placed on the containers by the packer correctly represent the kind, grade and weight of the contents.

Inspectors appointed under the Act are not at present required to inspect and mark every barrel or container of fish packed within their respective districts. They are authorized, however, to inspect as many of such as they find it possible to do. This necessarily leaves much room for a great number of barrels of fish of poor quality to slip through the market without inspection.

The purpose of the attached bill, therefore, is to make it obligatory for inspectors to inspect all fish and barrels which come under the provisions of the Act, by prohibiting the sale or shipment of such until they have been inspected and officially marked. It is proposed to secure this by amending subsections 1 and 2 of section 8 of the existing Act.

1. Section 1 of the bill is intended to amend subsections 1 and 2 of section 8 of the Act.

Subsection 1 at present simply requires that containers used for packing fish be made and marked in accordance with the regulations. The amendment to this subsection will require inspecting officers to see that all containers are of the standard quality and size, and to officially stamp such as come up to the standard before sale or shipment. Boxes for smoked herring and dry salted herring are to be exempted from this requirement as these are usually put together by the packer just before packing, and can be inspected when filled.

Fish oils are not at present subject to the provisions of the Act. By an amendment to the Act, however, assented to May 30, 1930, the Governor in Council has authority to at any time order anyone or more of such provisions to apply to fish oils.

Subsection 2 at present requires only that fish be graded, packed and marked in accordance with the regulations. The proposed amendment is intended to require inspecting officers to see that all fish subject to this inspection are properly cured, graded and packed and to mark the containers of such as are found to be in accordance with the regulations with a suitably designed official stamp before sale or shipment.

2. This section is intended to amend subsection 1 of section 9 of the Act which deals with imported fish, by adding to it the words "including the name and address of the packer or the license number of the packer".

3. Section fifteen of the said Act is hereby repealed and the following is substituted therefor:—

Penalty for altering official marks

"**15.** Any person who alters, destroys, erases or falsifies any declaration or other document, or any marks placed on the containers by an inspecting officer prescribed for use under the provisions of this Act, or under the regulations, shall be liable to a penalty of not less than twenty dollars and costs, and in default of payment to imprisonment for a term of not less than two months, or both, and not more than five hundred dollars or six months' imprisonment, or both."

Commencement of Act.

4. This Act shall come into force on the first day of January, 1932.

3. This section is intended to amend section 15 of the Act in order to bring it into line with the new system of inspection and marking to be instituted, by providing penalties for altering, destroying, erasing, etc., any marks placed on the containers by the inspecting officer.

4. This section provides for the amended Act coming into force on January 1, 1932. This date is considered to be the most suitable and convenient for the inauguration of the changes, as it comes between seasons, and will allow of sufficient time to make the industry fully acquainted with the changes required, before the beginning of the 1932 season.

Second Session, Seventeenth Parliament, 21 George V, 1931

THE HOUSE OF COMMONS OF CANADA

BILL 7.

An Act to amend the Criminal Code (Superior Criminal Courts and order of Addresses to Jury).

First reading, March 18, 1931.

Mr. LaVergne.

OTTAWA
F. A. ACLAND
PRINTER TO THE KING'S MOST EXCELLENT MAJESTY
24145 1931

2nd Session, 17th Parliament, 21 George V, 1931

THE HOUSE OF COMMONS OF CANADA.

BILL 7.

An Act to amend the Criminal Code (Superior Criminal Courts and order of Addresses to Jury).

R.S., c. 36.

HIS Majesty, by and with the advice and consent of the Senate and House of Commons of Canada, enacts as follows:—

1. Paragraph *(b)* of subsection thirty-eight of section two of the *Criminal Code*, chapter thirty-six of the Revised Statutes of Canada, 1927, is repealed, and the following is substituted therefor:—

Superior Court of criminal jurisdiction.

"*(b)* in the Province of Quebec a Judge of the Sessions of the Peace."

2. Section nine hundred and forty-four of the said Act is repealed, and the following is substituted therefor:—

Right of accused to close case.

"**944.** After the hearing of evidence of both prosecutor and defence, and all necessary evidence in rebuttal, parties may address the jury either personally or by counsel in the following order:—

(a) the prosecution,

(b) the defence.

The presiding judge shall then state the case to the jury, directing them in law, but without commenting on facts, which shall be left to the entire discretion and appreciation of the said jury."

EXPLANATORY NOTES.

1. The paragraph to be repealed reads as follows:—

"(38) 'superior court of criminal jurisdiction' means and includes the Courts following or such Courts as may be substituted therefor:—

"*(b)* in the province of Quebec, the Court of King's Bench."

2. The section to be repealed reads as follows:—

"**944.** If an accused person, or any one of several accused persons being tried together, is defended by counsel, such counsel shall, at the end of the case for the prosecution, declare whether he intends to adduce eivdence or not on behalf of the accused person for whom he appears; and if he does not thereupon announce his intention to adduce evidence, the counsel for the prosecution may address the jury by way of summing up.

2. Upon every trial for an indictable offence, the counsel for the accused, or the accused if he is not defended by counsel, shall be allowed, if he thinks fit, to open the case for the defence, and after the conclusion of such opening to examine such witnesses as he thinks fit, and when all the evidence is concluded to sum up the evidence.

3. If no witnesses are examined for the defence the counsel for the accused, or the accused in case he is not defended by counsel, shall have the privilege of addressing the jury last, otherwise such right shall belong to the counsel for the prosecution: Provided, that the right of reply shall be always allowedto the Attorney General or Solicitor General, or to any counsel acting on behalf of either of them."

Second Session, Seventeenth Parliament, 21 George V, 1931

THE HOUSE OF COMMONS OF CANADA.

BILL 8.

An Act to amend the Armistice Day Act.

First reading, March 18, 1931.

Mr. NEILL.

OTTAWA
F. A. ACLAND
PRINTER TO THE KING'S MOST EXCELLENT MAJESTY
1931

23844

2nd Session, 17th Parliament, 21 George V, 1931

THE HOUSE OF COMMONS OF CANADA.

BILL 8.

An Act to amend the Armistice Day Act.

R.S., c. 9.

HIS Majesty, by and with the advice and consent of the Senate and House of Commons of Canada, enacts as follows:—

1. Sections two and three of the *Armistice Day Act*, chapter nine of the Revised Statutes of Canada, 1927, are repealed, and the following is substituted therefor:—

"**2.** Throughout Canada in each and every year, the eleventh day of November, being the day in the year one thousand nine hundred and eighteen on which the Great War was triumphantly concluded by an armistice, shall be a legal holiday, and shall be kept and observed as such under the name of Armistice Day."

EXPLANATORY NOTE.

The sections to be repealed read as follows:—

"2. Throughout Canada in each and every year the Monday in the week in which the eleventh day of November shall occur, being the day in the year one thousand nine hundred and eighteen on Which the Great War was triumphantly concluded by an armistice, shall be a legal holiday and shall be kept and observed as such under the name of Armistice Day.

"3. The holiday commonly called Thansgiving Day being a day usually appointed in the month of October or November by Proclamation as a day of general thanksgiving to Almighty God, shall whenever appointed be proclaimed and observed for and on Armistice Day."

Second Session, Seventeenth Parliament, 21 George V, 1931

THE HOUSE OF COMMONS OF CANADA.

BILL 9.

An Act to ratify and confirm certain agreements respecting the joint use by Canadian National Railways of certain tracks and premises of Canadian Pacific Railway Company at Regina.

First reading, March 19, 1931.

THE MINISTER OF RAILWAYS AND CANALS.

OTTAWA
F. A. ACLAND
PRINTER TO THE KING'S MOST EXCELLENT MAJESTY
23347 1931

2nd Session, 17th Session, 21 George V, 1931

THE HOUSE OF COMMONS OF CANADA.

BILL 9.

An Act to ratify and confirm certain agreements respecting the joint use by Canadian National Railways of certain tracks and premises of Canadian Pacific Railway Company at Regina.

HIS Majesty, by and with the advice and consent of the Senate and House of Commons of Canada, enacts as follows:—

Supplementary and amending agreements ratified.

1. The supplementary agreement made by the Canadian Pacific Railway Company, Canadian Northern Railway Company and The Grand Trunk Pacific Railway Company, dated the twenty-eighth day of January, 1926, a copy of which forms Schedule "A" to this Act, and the amending agreement made by Canadian Pacific Railway Company, Canadian Northern Railway Company, The Grand Trunk Pacific Railway Company, The Grand Trunk Pacific Branch Lines Company, and Canadian National Railway Company, dated the fifth day of May, 1930, a copy of which forms Schedule "B" to this Act, are hereby ratified and confirmed and declared to be valid and binding on the parties thereto in all respects whatsoever, as fully and completely as if the said agreements were set out at length and enacted in this Act, and, subject to the provisions of the Railway Act, the parties to the said agreements are hereby authorized and empowered to do whatever may be necessary on their respective parts to give full effect to the provisions of the said agreements for the unexpired portion of the term of ninety-nine years referred to in the agreement between the Canadian Pacific Railway Company and the Canadian Northern Railway Company, dated the first day of January, 1912, which forms the Schedule to chapter ninety-four of the Statutes of Canada, 1913.

EXPLANATORY NOTE.

The object of this Bill is to ratify and confirm two Agreements between the Canadian Pacific Railway Company and the Canadian National Railways, supplementing and amending the original agreement of the 1st of January, 1912, between the Canadian Pacific Railway Company and The Canadian Northern Railway Company, for the joint use of certain tracks and premises of the Canadian Pacific Railway Company at Regina, Saskatchewan, and thus validating the Agreements for the full period of ninety-nine years from the date of the original agreement, unless sooner terminated in accordance with the provisions of the said original agreement.

SCHEDULE A.

THIS AGREEMENT made in quadruplicate this twenty-eighth day of January, A.D. 1926.

BETWEEN

CANADIAN PACIFIC RAILWAY COMPANY, hereinafter called "the Pacific Company,"

Of the first part,

THE CANADIAN NORTHERN RAILWAY COMPANY, hereinafter called "the Northern Company,"

Of the second part,

AND

THE GRAND TRUNK PACIFIC RAILWAY COMPANY, hereinafter called " the Trunk Company,"

Of the third part.

WHEREAS by Agreement in triplicate dated the First day of January, A.D. 1912, made between the Pacific Company and the Northern Company (and hereinafter referred to as "the Joint Section Agreement") reciting that the Northern Company was about to establish its own yard shops and other railway facilities at or in the vicinity of the City of Regina, in the Province of Saskatchewan, but desired to have track connection between its railway and the railway of the Pacific Company at the points indicated by the letters "A" and "B" on the plan annexed to said Agreement, and to operate its trains over certain tracks of the Pacific Company (therein and hereinafter referred to as "the Joint Tracks") and to have the benefit and enjoyment of the passenger facilities of the Pacific Company at Regina Station, the Pacific Company did permit the Northern Company to operate its trains over the said Joint Tracks and to have the benefit and enjoyment of the passenger station and passenger facilities of the Pacific Company at Regina aforesaid (therein and hereinafter referred to as "the Joint Premises") upon and subject to the terms, covenants, conditions, provisions and agreements therein contained.

AND WHEREAS the Trunk Company is now under the management and operation of those who constitute the Board of Directors of the Northern Company and the Northern Company and the Trunk Company are parts of one system of railways known as the Canadian National Railways;

AND WHEREAS the Northern Company and the Trunk Company desire to operate the trains of the systems of the Northern Company and the Trunk Company (which systems are hereinafter jointly referred to as "the Co-ordinated

System") over the Joint Tracks and to have and enjoy for the Co-ordinated System all the privileges and advantages granted to the Northern Company under the Joint Section Agreement;

AND WHEREAS the Pacific Company has agreed thereto upon and subject to the observance and performance by the Northern Company and the Trunk Company of the terms, covenants, conditions, provisions and agreements in the said Joint Section Agreement set out as varied hereby;

THEREFORE, the parties hereto respectively covenant and agree each with the other of them as follows:—

1. The Pacific Company covenants and agrees with the Northern Company and the Trunk Company that the Northern Company and the Trunk Company operating as the Co-ordinated System may, during the continuance of this Agreement, operate the trains of the Co-ordinated System over the Joint Tracks and that the Co-ordinated System shall have the benefit and enjoyment of the Joint Premises all upon the terms, covenants, conditions, provisions and agreements herein and in the Joint Section Agreement particularly set out, and in conjunction with the Pacific Company and any other Company or Companies to which the Pacific Company may in pursuance of the Joint Section Agreement give similar privileges.

2. The Northern Company and the Trunk Company jointly covenant and agree to pay to the Pacific Company all sums payable by the Northern Company to the Pacific Company under the Joint Section Agreement except that in lieu of the sums payable under sub-paragraphs (c), (e) and (f) of Clause 24 of the Joint Section Agreement the following sums shall be payable by the Northern Company and the Trunk Company jointly to the Pacific Company: (1) thirty-five per cent. (35%) of the cost and expense of maintenance and repair of the Joint Premises, including the maintenance and operation of the passenger station and services incidental thereto; (2) thirty-five per cent. (35%) of all insurance premiums, if any, payable in respect of any building or structure comprised in the Joint Premises, including premiums charged by the Pacific Company in respect of any insurance carried in its own Insurance Fund: and (3) thirty-five per cent. (35%) of all such other cost and expense incurred in the maintenance and repair of the Joint Premises not included in the foregoing, but which according to the usual practice of railway companies is properly chargeable to maintenance and repair, being an increase of five per cent. (5%) in the percentages agreed to be paid by the Northern Company to the Pacific Company under sub-paragraphs (c), (e) and (f) of Clause 24 of the Joint Section Agreement, and the said sub-paragraphs (c), (e) and (f) of said Clause 24 of the Joint Section Agreement are hereby amended accordingly.

3. The Northern Company and the Trunk Company hereby covenant and agree with the Pacific Company and the Pacific Company hereby covenants and agrees with the Northern Company and the Trunk Company that except as herein otherwise provided all the rights, terms, covenants, conditions, provisions and agreements in the said Joint Section Agreement contained, shall enure to the benefit of and be binding upon the Trunk Company and shall apply to the operation of the trains of the Co-ordinated System over the Joint Tracks and to the use and enjoyment by the Co-ordinated System of the Joint Premises, and that wherever the words the "Northern Company" or the word "Company," when the same means the Northern Company appear in the Joint Section Agreement the same shall hereafter be construed as meaning the Northern Company and/or the Trunk Company, and the Northern Company and the Trunk Company hereby covenant and agree with the Pacific Company to observe, perform and fully comply with all of the terms, covenants, conditions, provisions and agreements in the Joint Section Agreement contained, as varied hereby.

4. The Pacific Company further agrees with the Northern Company and the Trunk Company that, whenever it receives a request in writing from the Northern Company or its successor (by amalgamation or otherwise) so to do, it will permit any other Company or Railway forming part of the Canadian National Railways to exercise the same rights as are hereby granted to the Trunk Company, upon and subject to the same terms, covenants and conditions herein and in the Joint Section Agreement contained, subject, however, in that event to this variation, that the share of the cost and expenses mentioned in sub-paragraphs (c), (e) and (f) of the said Clause 24 of the Joint Section Agreement payable by the Northern Company, the Trunk Company and such other Company or Companies, Railway or Railways forming part of the Canadian National Railways, shall be the proportion of the total of such cost and expenses which the number of their engines and cars passing over the Joint Tracks or any portion thereof bears to the total number of engines and cars passing over the Joint Tracks or any portion thereof, but in no event shall such share be less than the percentages provided for in Clause 2 of this Agreement; Provided, however, and it is hereby agreed that should the freight trains of either of the parties hereto be hereafter diverted so as not to pass over the Joint Tracks, such trains shall not be included in the count of wheelage herein provided for, even though it should be necessary in order to make such diversion, for such trains to cross over the Joint Tracks at or near both or one of the termini thereof.

5. This Agreement shall, subject to the sooner determination thereof as provided in the Joint Section Agreement, continue in force from the date hereof for the term of twenty (20) years computed from the first day of January, 1912, PROVIDED, HOWEVER, that the Pacific Company will join with the Northern Company and the Trunk Company in applying to Parliament for the necessary legislation confirming and ratifying this Agreement and making it effective from the date hereof and for and during the unexpired portion of the term of ninety-nine (99) years referred to in the Joint Section Agreement, and when so ratified and confirmed this Agreement shall be and continue in force for the unexpired portion of the last mentioned term.

IN WITNESS WHEREOF the parties hereto have caused their respective Corporate Seals to be hereunto affixed, attested by the hands of their respective proper officers in that behalf, the day and year first above written.

SIGNED, SEALED and DELIVERED
In the Presence of

THE CANADIAN NORTHERN RAILWAY COMPANY,

GERARD RUEL,
Vice-President.

HENRY, PHILIP,
Assistant Secretary.

(L.S.)

THE GRAND TRUNK PACIFIC
RAILWAY COMPANY,

GERARD RUEL,
Vice-President.

HENRY PHILIPS,
Assistant Secretary.

(L.S.)

CANADIAN PACIFIC RAILWAY COMPANY,

D. C. COLEMAN,
Vice-President,

H. C. OSWALD,
Assistant Secretary.

(L.S.)

S. J. HUNGERFORD.
Approved

GEO. P. GRAHAM,
Minister of Railways and Canals.
Receiver.

SCHEDULE B.

Approved as to form only G.M.H.

Approved A.A.T.

G.C.H.

THIS AGREEMENT made in duplicate this fifth day of May, A.D. 1930.

BETWEEN:

CANADIAN PACIFIC RAILWAY COMPANY, Hereinafter called "the Pacific Company",

Of the first part,

AND

THE CANADIAN NORTHERN RAILWAY COMPANY, Hereinafter called "the Northern Company" THE GRAND TRUNK PACIFIC RAILWAY COMPANY, hereinafter called "the Trunk Company", THE GRAND TRUNK PACIFIC BRANCH LINES COMPANY, Hereinafter called "the Branch Lines Company" and CANADIAN NATIONAL RAILWAY COMPANY, Hereinafter called "the National Company"

Of the second part.

WHEREAS by Agreement in triplicate dated the First day of January, A.D. 1912, made between the Pacific Company and the Northern Company (and hereinafter referred to as "the Joint Section Agreement") reciting that the Northern Company was about to establish its own yard, shops and other railway facilities at or in the vicinity of the City of Regina, in the Province of Saskatchewan, but desired to have track connection between its railway and the railway of the Pacific Company at the points indicated by the letters "A" and "B" on the plan annexed to said Agreement, and to operate its trains over certain tracks of the Pacific Company (therein and hereinafter referred to as "the Joint Tracks") and to have the benefit and enjoyment of the passenger facilities of the Pacific Company at Regina Station, the Pacific Company did permit the Northern Company to operate its trains over the said Joint Tracks and to have the benefit and enjoyment of the passenger stations and passenger facilities of the Pacific Company at Regina aforesaid (therein and hereinafter referred to as "the Joint Premises") upon and subject to the terms, covenants, conditions, provisions and agreements therein contained;

AND WHEREAS by Agreement made in quadruplicate dated the twenty-eighth day of January, A.D. 1926, and made between the Pacific Company of the First Part, the Northern Company of the Second Part, and the Trunk Company of the Third Part, reciting the hereinbefore recited Joint Section Agreement of the First day of January, A.D. 1912, and reciting that the Trunk Company was then

under the management and operation of those who constitute the Board of Directors of the Northern Company, and the Northern Company and the Trunk Company were parts of one system of railways known as the "Canadian National Railways", and further reciting that the Northern Company and the Trunk Company desired to operate the trains of the systems of the Northern Company and the Trunk Company (which systems were therein jointly referred to as "the Co-ordinated System") over the joint tracks, and to have and enjoy for the Co-ordinated System all the privileges and advantages granted to the Northern Company under the Joint Section Agreement, the Pacific Company did thereby covenant and agree with the Northern Company and the Trunk Company that the Northern Company and the Trunk Company, operating as the Co-ordinated System, might, during the continuance of the Agreement, operate the trains of the Co-ordinated System over the Joint Tracks and that the Co-ordinated System should have the benefit and enjoyment of the Joint Premises all upon the terms, covenants, conditions, provisions and agreements therein and in the Joint Section Agreement particularly set out and in conjunction with the Pacific Company and any other Company or Companies to which the Pacific Company may, in pursuance of the Joint section Agreement, give similar privileges;

AND WHEREAS it has been agreed by and between the parties hereto that the said Joint Section Agreement of the First day of January, A.D. 1912, and the said Supplementary Agreement of the Twenty-eighth day of January, A.D. 1926, shall be amended as hereinafter provided;

THEREFORE, the parties hereto respectively covenant and agree each with the other of them as follows:—

1. The words "National Companies" wherever they hereinafter occur in this Agreement shall mean and include the Northern Company, the Trunk Company, the Branch Lines Company and the National Company.

2. The Pacific Company hereby agrees to instruct the staff employed in the Information Bureau, or such other staff as from time to time may handle the commercial business of the Pacific Company, in the said Joint Station, to accept commercial telegraph messages for transmission over the wires of the National Companies in the same manner as commercial telegraph messages are now accepted by said staff for transmission over the wires of the Pacific Company. The National Companies shall furnish the said staff with the necessary telegraph blank forms of the National Companies, which said telegraph forms shall be available and displayed to the public in the same manner as the telegraph forms of the Pacific Company. The National Companies hereby agree to pay the said staff the usual commission of ten per cent (10%) on all commercial

telegraph messages accepted by the said staff for or on behalf of the National Companies, or such other commission as the Pacific Company may from time to time pay on its commercial telegraph messages. Subject to the foregoing the said staff in handling commercial telegraphs shall be deemed common employees.

3. The Pacific Company hereby agrees with the National Companies that in the event of the Pacific Company installing in the Joint Station a separate office, and telegraph and telephone instruments for the purpose of transmitting directly from the said Joint Station the commercial telegraph messages of the Pacific Company, then the National Companies shall have the privilege, if they so desire, of installing in the Joint Station a separate office and their own telegraph and telephone instruments for transmitting directly from the Joint Station the commercial telegraph messages of the National Companies and the Pacific Company will, upon the request in writing of the said parties, furnish the National Companies with suitable space in the said Joint Station for said purpose, the location, importance and size of the said space to be determined by the Pacific Company, but to be relatively equal in area and importance to the space provided for the like purpose for the Pacific Company, due regard being had to the volume of commercial telegraph business being done by each party hereto respectively at the said Joint Station. In the event of separate offices for the handling of commercial telegraph messages being installed in the Joint Station as aforesaid then it is hereby understood and agreed that each party shall pay the salaries, wages and expenses of its own telegraph operators and other employees employed in or about its separate office and all other expense incidental to the equipment and operation of its telegraph office, none of which expense shall be included in the operating and maintenance expense of the Joint Premises.

4. The Pacific Company agrees that, in the event of the Pacific Company constructing a new station building upon the Joint Premises or so extending, remodelling or re-arranging the existing station so as to render available space for separate ticket offices, it will, if requested so to do by the National Companies, provide suitable space for a separate ticket office for the National Companies in the said station building, as so re-constructed, extended, remodelled or re-arranged, the location and size of the said space to be determined by the Pacific Company, but to be relatively equal in area and importance to the space provided for the like purpose for the Pacific Company, due regard being had to the volume of passenger business being done by each party hereto respectively at the said Joint Station. In the event of separate ticket offices for

the handling of passenger business being installed in the Joint Station as aforesaid, then it is hereby understood and agreed that each party shall pay the salaries, wages and expenses of its own ticket agents, clerks and other employees employed in or about its separate ticket offices and all other expenses incidental to the equipment and operation of its ticket office, none of which expense shall be included in the operating and maintenance expense of the Joint Premises.

5. The Pacific Company agrees that the National Companies shall have the right, in common with the Pacific Company and with such other Company or Companies as the Pacific Company may grant, similar privileges, to park their sleeping cars, coaches, parlour cars, baggage, express and mail and business cars at such times and at such places on the Joint Tracks in the vicinity of the said Station Premises as may be agreed upon between the Operating Officials of the parties hereto and so as to permit reasonable satisfactory access thereto for passenger, baggage, express or mail business, due regard being had, however, to the space available and the volume of business being done by the parties hereto respectively upon the said Joint Premises.

6. The National Companies shall, for a reasonable time before and after the arrival and departure of the trains of the National Companies, have the right of switching the said sleeping cars, coaches, parlour cars, baggage, express and mail cars to and from the said Joint Tracks and into and out of the trains of the National Companies, whether through or local, by means of the engines and employees of the National Companies, such switching to be done under the direction of and at such times and in such manner as may be satisfactory to the Operating officials of the Pacific Company. Nothing herein contained shall be construed as permitting the National Companies to otherwise make up trains on the Joint Tracks.

7. Uniformed employees of the National Companies shall be permitted access to the Joint Station and platform for the purpose of giving service to passengers of the National Companies, and to remain while so giving such service, but not otherwise.

8. The Pacific Company shall require all common employees employed in and upon the Joint Premises to be neutral in the performance of their duties as between the parties hereto and to do the business of each party without discrimination.

9. IT IS UNDERSTOOD AND AGREED by and between the parties hereto that, in addition to advertising their train service in the Joint Station, as provided by paragraph 23 of the Joint Section Agreement, the National Companies may also advertise their and their allied steamship, telegraph, express and other services in the said Joint Station

in the same manner and to the same extent as similar advertising of the Pacific Company.

10. IT IS FURTHER UNDERSTOOD AND AGREED by and between the parties hereto that the reference to clauses 5 and 6 contained in clause 1 of the Joint Section Agreement should be read and construed as clauses 7 and 8 thereof.

11. IT IS HEREBY ALSO AGREED AND UNDERSTOOD by and between the parties hereto that the said hereinbefore recited agreements of the First day of January, A.D. 1912 and the twenty-eighth day of January, A.D. 1926, as amplified and amended hereby, shall remain in full force and effect, subject to all the terms, covenants and conditions therein and herein contained for and during the term in said agreements mentioned, unless sooner terminated as therein provided.

IN WITNESS WHEREOF the parties hereto have caused their respective corporate seals to be hereunto affixed, attested by the hands of their respective proper officers in that behalf, the day and year first above written.

CANADIAN PACIFIC RAILWAY COMPANY,

GRANT HALL,
Vice-President.

PARKER GRANT. (Seal)

H. C. OSWALD,
Assistant-Secretary.

THE CANADIAN NORTHERN RAILWAY COMPANY,

S. J. HUNGERFORD,
Vice-President.

G. C. HEBERT. (Seal)

D. H. GUNN,
Assistant-Secretary.

THE GRAND TRUNK PACIFIC RAILWAY COMPANY,

S. J. HUNGERFORD,
Vice-President.

G. C. HEBERT. (Seal)

D. H. GUNN,
Assistant-Secretary.

THE GRAND TRUNK PACIFIC BRANCH LINES COMPANY,

S. J. HUNGERFORD,
Vice-President.

G. C. HEBERT. (Seal)

D. H. GUNN,
Assistant-Secretary.

CANADIAN NATIONAL RAILWAY COMPANY,

S. J. HUNGERFORD,
Vice-President.

G. C. HEBERT. (Seal)

D. H. GUNN,
Assistant-Secretary.

Second Session, Seventeenth Parliament, 21 George V, 1931

THE HOUSE OF COMMONS OF CANADA.

BILL 10.

An Act to amend the Canada Evidence Act.

First reading, March 20, 1931.

THE MINISTER OF JUSTICE.

OTTAWA
F. A. ACLAND
PRINTER TO THE KING'S MOST EXCELLENT MAJESTY
22349 1931

2nd Session, 17th Parliament, 21 George V, 1931

THE HOUSE OF COMMONS OF CANADA

BILL 10.

An Act to amend the Canada Evidence Act.

R.S. c. 59.

HIS MAJESTY, by and with the advice and consent of the Senate and House of Commons of Canada, enacts as follows:—

Proof of entries in Dominion books.

1. Section twenty-six of the *Canada Evidence Act*, chapter fifty-nine of the Revised Statutes of Canada, 1927, is hereby amended by adding thereto the following subsection:—

Proof that no licence or other document has been issued.

"(2) Where by any statute of Canada or regulation thereunder provision is made for the issue by a department, commission, board or other branch of the public service, of a licence requisite to the doing or having of any act or thing or for the issue of any other document, an affidavit of an officer of the department, commission, board or other branch of the public service, sworn before any commissioner or other person authorized to take affidavits, that he has charge of the appropriate records and that after careful examination and search of such records he has been unable to find in any given case that any such licence or other document has been issued, shall be received as *prima facie* evidence that in such case no licence or other document has been issued."

Second Session, Seventeenth Parliament, 21 George V, 1931.

THE HOUSE OF COMMONS OF CANADA

BILL 11.

An Act to amend the Ticket of Leave Act.

First reading, March 20, 1931.

THE MINISTER OF JUSTICE.

OTTAWA
F. A. ACLAND
PRINTER TO THE KING'S MOST EXCELLENT MAJESTY
1931

23475

2nd Session, 17th Parliament, 21 Geo. V, 1931

THE HOUSE OF COMMONS OF CANADA.

BILL 11.

An Act to amend the Ticket of Leave Act.

R.S., c. 197.

HIS Majesty, by and with the advice and consent of the Senate and House of Commons of Canada, enacts as follows:—

1. Section two of the *Ticket of Leave Act*, chapter one hundred and ninety-seven of the Revised Statutes of Canada, 1927, is repealed, and the following is substituted therefor:—

Administration.

"**2.** It shall be the duty of the Minister of Justice, or of such other member of the Government as may be designated by the Governor in Council, to advise the Governor General upon all matters connected with or affecting the administration of this Act."

Second Session, Seventeenth Parliament, 21 George V, 1931

THE HOUSE OF COMMONS OF CANADA

BILL 12.

An Act respecting Guaranty Trust Company of Canada.

First reading, March 23, 1931.

(PRIVATE BILL)

MR. ROBINSON.

OTTAWA
F. A. ACLAND
PRINTER TO THE KING'S MOST EXCELLENT MAJESTY
23201 1931

2nd Session, 17th Parliament, 21 Geo. V, 1931

THE HOUSE OF COMMONS OF CANADA

BILL 12.

An Act respecting Guaranty Trust Company of Canada.

Preamble. 1925, c. 65.

WHEREAS Guaranty Trust Company of Canada has by its petition prayed that it be enacted as hereinafter set forth, and it is expedient to grant the prayer of the said petition: Therefore His Majesty, by and with the advice and consent of the Senate and House of Commons of Canada, enacts as follows:—

Increase of capital stock.

1. Section three of chapter sixty-five of the Statutes of 1925 is hereby repealed and the following is substituted therefor:—

Capital stock.

"**3.** The capital stock of the company shall be one million five hundred thousand dollars which may be increased to two million five hundred thousand dollars.

Explanatory Note

1. The section to be repealed reads as follows:—

"**3.** The capital stock of the company shall be five hundred thousand dollars."

Second Session, Seventeenth Parliament, 21 George V, 1931

THE HOUSE OF COMMONS OF CANADA

BILL 13.

An Act respecting Grain Insurance and Guarantee Company.

First reading, March 23, 1931.

(PRIVATE BILL)

MR. KENNEDY (Winnipeg).

OTTAWA
F. A. ACLAND
PRINTER TO THE KING'S MOST EXCELLENT MAJESTY
23202 1931

2nd Session, 17th Parliament, 21 George V, 1931

THE HOUSE OF COMMONS OF CANADA.

BILL 13.

An Act respecting Grain Insurance and Guarantee Company.

Preamble. 1919, c. 97.

WHEREAS Grain Insurance and Guarantee Company, incorporated by chapter ninety-seven of the statutes of 1919, hereinafter called "the Company" has, by its petition prayed for the passing of an Act to increase its capital stock and for other amendments to its Act of incorporation and it is expedient to grant the prayer of the said petition: Therefore His Majesty, by and with the advice and consent of the Senate and House of Commons of Canada, enacts as follows:—

Capital stock increased.

1. Section three of chapter ninety-seven of the statutes of 1919 is hereby repealed and the following section is substituted therefor:—

Capital stock.

"**3.** The capital stock of the Company shall be two million five hundred thousand dollars."

By Laws.

2. The directors of the Company may make by-laws—

(a) for creating and issuing any part of the unissued capital stock as preferred stock, and

(b) for the conversion into preferred stock of the shares of the capital stock of the Company subscribed for and issued before the coming into force of this Act together with any additional shares of the capital stock issued after the said date and arising from the declaration, or issued in satisfaction of dividends declared prior to or contemporaneously with the passing of the first by-law under the provisions of this section.

Conditions of preferred stock.

3. The preferred stock authorized by this Act may by the by-law creating the same be given such preference and priority as respects dividends and in any other respect over ordinary stock and may also be made subject to such restrictions as respects dividends and voting rights and in any other respect as is by such by-law declared.

EXPLANATORY NOTE.

1. The section to be repealed reads as follows:—

"3. The capital stock of the Company shall be five hundred thousand dollars, which may be increased to one million dollars."

Rights of holders of preferred stock.

4. (1) Any such by-law may provide that the holders of shares of the preferred stock shall have the right to select a certain stated proportion of the board of directors or may give them such other control or may so limit their control over the affairs of the Company as is considered expedient and may provide for the redemption of such shares by the Company as therein set out: Provided, however, that on any such redemption no premium shall be paid to the holders of such shares.

Rate of dividend.

(2) The said preferred stock shall not carry a higher rate of dividend than seven per centum per annum, excepting, however, that the holders of shares of preferred stock may from time to time be paid such additional dividends or distributions as may from time to time be declared by the directors out of any surplus or portion of surplus which may be accrued and undistributed at the time of the passing of the first by-law made under the provisions of this Act if such surplus or portion of surplus is by said by-law set apart solely and particularly for the benefit of the holders of shares of preferred stock.

Terms to be set out in certificates.

(3) Any term or provision of any such by-law, whereby the rights of holders of shares of preferred stock are limited or restricted, shall be fully set out in the certificate of such shares.

Redemption or conversion.

5. Unless preferred stock is issued subject to redemption or conversion, the same shall not be subject to redemption or conversion without the consent of the holders thereof.

Coming into force of by-laws.

6. No such by-law shall have any force or effect whatever until after it has been sanctioned by at least two-thirds of the votes cast at a special general meeting of the shareholders of the Company duly called for considering the same.

No conversion without consent.

7. Notwithstanding anything herein contained the holders of ordinary shares of the Company issued prior to the passing of any by-law pursuant to section two hereof, shall not be bound without their consent, to convert into preferred stock any ordinary shares held by them.

Holders of preferred stock to be shareholders.

8. Holders of shares of preferred stock shall be shareholders within the meaning of the Acts applicable to the Company, and shall in all respects possess the rights and be subject to the liabilities of shareholders within the meaning thereof: Provided that in respect of dividends, and in any other respect declared by by-law as authorized by this Act, they shall, as against the ordinary shareholders, be entitled to the preferences and rights given by such by-law.

Second Session, Seventeenth Parliament, 21 George V, 1931

THE HOUSE OF COMMONS OF CANADA.

BILL 14.

An Act respecting The Kettle Valley Railway Company.

First reading, March 23, 1931.

(PRIVATE BILL)

Mr. STIRLING.

OTTAWA
F. A. ACLAND
PRINTER TO THE KING'S MOST EXCELLENT MAJESTY
24284 1931

2nd Session, 17th Parliament, 21 George V, 1931

THE HOUSE OF COMMONS OF CANADA.

BILL 14.

An Act respecting The Kettle Valley Railway Company.

1901, c. 68;
1903, c. 138;
1904, c. 89;
1906, c. 117;
1909, c. 95;
1910, c. 115;
1911, c. 101;
1912, c. 110;
1913, c. 140;
1914, c. 92;
1915, c. 46;
1916, c. 45;
1918, c. 54;
1920, c. 78;
1922, c. 61.

WHEREAS The Kettle Valley Railway Company has by its petition prayed for the passing of an Act authorizing it to construct a certain line of railway, as hereinafter set forth, and it is expedient to grant the prayer of the said petition: Therefore His Majesty, by and with the advice and consent of the Senate and House of Commons of Canada, enacts as follows:—

Line of railway authorized.

1. The Kettle Valley Railway Company, hereinafter called "the Company", may within two years after the passing of this Act commence to construct a line of railway from a point on the Osoyoos subdivision of the Kettle Valley Railway at or near Skaha, thence in a generally southerly direction to a point at or near Okanagan Falls on the said line of railway, all in the province of British Columbia; and may within five years after the passing of this Act complete the said line of railway, and if within the said periods respectively the said line of railway is not commenced and is not completed and put in operation, the powers of construction conferred upon the Company by Parliament shall cease and be null and void as respects so much of the said line of railway as shall not then have been commenced or completed, as the case may be.

Time for completion.

Issue of securities.

2. The securities issued by the Company shall not exceed seventy thousand dollars per mile of the railway authorized by this Act, and may be issued only in proportion to the length of railway constructed or under contract to be constructed.

Second Session, Seventeenth Parliament, 21 George V, 1931

THE HOUSE OF COMMONS OF CANADA.

BILL 15.

An Act respecting the Canadian Pacific Railway Company.

First reading, March 23, 1931.

(PRIVATE BILL.)

Mr. WILLIS.

OTTAWA
F. A. ACLAND
PRINTER TO THE KING'S MOST EXCELLENT MAJESTY
24283 1931

2nd Session, 17th Parliament, 21 George V, 1931

THE HOUSE OF COMMONS OF CANADA.

BILL 15.

An Act respecting the Canadian Pacific Railway Company.

Preamble.

1919, c. 79; 1920, c. 75; 1922, c. 55; 1924, c. 78; 1927, c. 80; 1929, c. 65; 1930, c. 53.

WHEREAS the Canadian Pacific Railway Company has by its petition prayed for the passing of an Act authorizing it to construct a certain line of railway; to extend the time for the commencement and completion of certain other lines of railway; and to extend the time for the completion of a certain other line of railway, all as hereinafter set forth, and it is expedient to grant the prayer of the said petition: Therefore His Majesty, by and with the advice and consent of the Senate and House of Commons of Canada, enacts as follows:—

Line of railway authorized.

From Breslay station to L'Epiphanie.

Completion within five years.

1. The Canadian Pacific Railway Company, hereinafter called "the Company", may within two years after the passing of this Act commence to construct a line of railway from a point on the Company's railway between Breslay station and its terminus at Place Viger in the city of Montreal, county of Hochelaga, thence in a generally northerly direction through the counties of Hochelaga and L'Assomption, to a connection with the Company's railway at or near L'Epiphanie, all in the province of Quebec; and may within five years after the passing of this Act complete the said line of railway, and if within the said periods respectively, the said line of railway is not commenced or is not completed and put in operation the powers of construction conferred upon the Company by Parliament shall cease and be null and void as respects so much of the said line of railway as shall not then have been commenced or completed, as the case may be.

Extension of time.

2. The Company may within two years after the passing of this Act commence to construct the lines of railway which it was authorized to construct by paragraphs *(a)*, *(b)*, *(c)*, *(d)*, *(e)*, *(h)* and *(j)*, of section one of chapter sixty-five of the statutes of 1929, namely:—

From a point on the Lac du Bonnet branch to the eastern boundary of Manitoba.

(a) From a point on the Lac du Bonnet branch of the Canadian Pacific Railway in township fifteen, range eleven, east of the principal meridian, thence in a generally northerly and easterly direction to a point on or near the eastern boundary of the province of Manitoba in or near township sixteen, seventeen or eighteen, range seventeen, east of the principal meridian in the said province;

Bredenbury-Esterhazy.

(b) From a point at or near Bredenbury on the main line of the Manitoba and North Western Railway in township twenty-two or twenty-three, range one, west of the second meridian, thence in a generally southerly direction to a point at or near Esterhazy, on the Pheasant Hills branch of the Canadian Pacific railway, in township nineteen, range one, west of the second meridian, all in the province of Saskatchewan;

Nipawin-Island Falls.

(c) From a point at or near Nipawin on the Tuffnell-Prince Albert branch of the Manitoba and North Western Railway, in township fifty or fifty-one, range fourteen or fifteen, west of the second meridian, thence in a generally northeasterly direction to a point at or near Island Falls on the Churchill River, all in the province of Saskatchewan;

Gronlid-Pontrilas.

(d) From a point at or near Gronlid on the Lanigan Northeasterly branch of the Canadian Pacific Railway in township forty-seven, range seventeen, west of the second meridian, thence in a generally northeasterly direction to a point in the vicinity of Pontrilas on the Tuffnell-Prince Albert branch of the Manitoba and North Western Railway, in township forty-nine, range fourteen; west of the second meridian, all in the province of Saskatchewan;

Prince Albert-Foster Lakes.

(e) From a point on the Tuffnell-Prince Albert branch of the Manitoba and North Western Railway at or near the junction of the said branch with the Paddockwood branch of the Canadian National Railways, thence in a generally northerly direction to a point in the vicinity of Foster Lakes, all in the province of Saskatchewan;

Hazeldine-Cold Lake.

(h) From a point at or near Hazeldine on the Cutknife-Whitford Lake branch of the Canadian Pacific Railway in township fifty-three, range three or four, west of the fourth meridian, thence in a generally northerly direction to a point at or near Cold Lake in or near township sixty-three, range one or two, west of the fourth meridian, all in the province of Alberta;

From Trail to where Pend d'Oreille crosses boundary.

(j) From a point on the Columbia and Western Railway at or near Trail, thence in a generally easterly, southerly and easterly direction to a point on the International Boundary at or near the point where the Pend d'Oreille River crosses such boundary;

Time for commencement and completion.

and may within five years after the passing of this Act complete the said lines of railway, and, if within the said periods respectively, any of the said lines of railway is or are not commenced or is or are not completed and put in operation, the powers of construction conferred upon the Company by Parliament shall cease and be null and void as respects so much of such of the said lines of railway as shall not then have been commenced or completed, as the case may be.

Extension of time for completion.

3. The Company may within five years after the passing of this Act complete and put in operation the line of railway which it was authorized to construct by paragraph *(a)* of section one of chapter seventy-five, of the statutes of 1920, as amended by paragraph *(b)* of section one of chapter fifty-five, of the statutes of 1922, and as further amended by paragraph *(b)* of section two, of chapter seventy-eight of the statutes of 1924, and by section two of chapter eighteen of the statutes of 1926, from a point on the Pheasant Hills branch at or near Asquith, in township thirty-six, ranges nine or ten, west of the third meridian, thence in a generally northwesterly direction to a point on the Wilkie Northwesterly Branch at or near Cloan, in township forty-two, range twenty, west of the third meridian, all in the province of Saskatchewan; and if the said line of railway is not so completed and put in operation within the said period, the powers of construction conferred upon the Company by Parliament shall cease and be null and void as respects so much of the said line of railway as shall then remain uncompleted.

Asquith-Cloan.

Issue of securities.

4. (1) The Company may issue bonds, debentures, or other securities to an amount not exceeding the cost of the line of railway described in section one hereof, constructed or under contract to be constructed.

Application of Railway Act. R.S., c. 170. Bonds, mortgages and borrowing powers.

(2) Any such issue shall be made in accordance with the provisions of the Company's Special Act as defined in section two of the *Railway Act*, and in all respects not inconsistent with these provisions, the provisions of section one hundred and thirty-two (except of sub-section one thereof) to one hundred and forty-four, both inclusive, of the *Railway Act*, shall also apply to any such issue.

Issue of consolidated debenture stock in lieu of bonds.

5. In lieu of the bonds, the issue of which is authorized by this Act, the Company, being first authorized so to do by at least two-thirds of the shareholders present or represented at an annual meeting, or at a special meeting of the shareholders duly called for the purpose, may issue consolidated debenture stock to the same amount, the

holders of which shall have equal rights in all respects and shall rank pari passu with the holders of such consolidated debenture stock as the Company has, before the passing of this Act, been authorized to issue.

Second Session, Seventeenth Parliament, 21 George V, 1931

THE HOUSE OF COMMONS OF CANADA.

BILL 16.

An Act to amend the Dairy Industry Act (Increase of penalties).

First reading, March 26, 1931.

Mr. GOBEIL.

OTTAWA
F. A. ACLAND
PRINTER TO THE KING'S MOST EXCELLENT MAJESTY
24664 1931

2nd Session, 17th Parliament, 21 George V, 1931

THE HOUSE OF COMMONS OF CANADA.

BILL 16.

An Act to amend the Dairy Industry Act (Increase of penalties).

R.S., c. 45; 1928, c. 19.

HIS Majesty, by and with the advice and consent of the Senate and House of Commons of Canada, enacts as follows:—

Penalties increased.

1. Section ten of the *Dairy Industry Act*, chapter forty-five of the Revised Statutes of Canada, 1927, is repealed and the following is substituted therefor:—

Penalty, sections 5 and 7.

"**10.** Any person who violates any provision of sections five or seven of this Act shall be guilty of an offence and upon summary conviction, shall be liable

(a) in the case of a first offence to a fine not exceeding one thousand dollars and not less than five hundred dollars;

(b) in the case of a second offence to a fine not exceeding two thousand dollars and not less than one thousand dollars; in each case together with the cost of prosecution and in default of payment of such penalty and costs, to imprisonment for a term not exceeding six months with or without hard labour, unless the said penalty and costs, with costs of enforcing the same, are sooner paid;

(c) in the case of a third or subsequent offence to imprisonment for a term not exceeding six months with or without hard labour."

Explanatory Notes.

1. The purpose of this Bill is to increase the penalties provided for violation of sections 5 and 7 of the Act. The words underlined on the opposite page are new and it is intended they should replace certain words in section ten as it now stands. Section ten now reads as follows:—(The words to be replaced are in italics).

"**10.** Any person who violates any provision of sections five or seven of this Act shall be guilty of an offence and upon summary conviction, shall be liable

(a) In the case of a first offence to a fine not exceeding *four hundred* dollars and not less than *two* hundred dollars;

(b) in the case of a second offence to a fine not exceeding *one* thousand dollars and not less than *five hundred* dollars; in each case together with the costs of prosecution, and in default of payment of such penalty and costs, to imprisonment for a term not exceeding six months with or without hard labour, unless the said penalty and costs, with costs of enforcing the same, are sooner paid;

(c) in the case of a third or subsequent offence to imprisonment for a term not exceeding six months with or without hard labour."

Sections 5 and 7 for which the penalties are provided read as follows:

"**5.** No person shall

(a) manufacture, import into Canada, or offer, sell or have in his possession for sale, any oleomargarine, margarine, butterine, or other substitute for butter, manufactured wholly or in part from any fat other than that of milk or cream;

(b) mix with or incorporate with butter, by any process of heating, soaking, rechurning, reworking, or otherwise, any cream, milk, skim-milk, buttermilk or water to cause such butter when so treated to contain over sixteen per centum of water or less than eighty per centum of milk fat;

(c) melt, clarify, refine, rechurn, or otherwise treat butter to produce "process" or "renovated" butter;

(d) manufacture, import into Canada, or sell, offer, expose or have in possession for sale, any milk or cream or substitute therefor which contains any fat or oil other than that of milk.

(e) have upon premises occupied by him where any dairy produce is treated, manipulated, manufactured, or reworked, any substance that might be used for the adulteration of any such product and the presence upon any such premises of any fat or oil capable of being used for such adulteration shall be *prima facie* proof of intent so to use it.

"**7.** No person shall manufacture, import into Canada, sell, offer, or have in possession for sale, any cheese which contains any fat or oil other than that of milk or cream."

Second Session, Seventeenth Parliament, 21 George V, 1931

THE HOUSE OF COMMONS OF CANADA.

BILL 17.

An Act for granting to His Majesty certain sums of money for the public service of the financial year ending the 31st March, 1931.

First reading, March 31, 1931.

THE MINISTER OF FINANCE.

OTTAWA
F. A. ACLAND
PRINTER TO THE KING'S MOST EXCELLENT MAJESTY
1931

25113

2nd Session, 17th Parliament, 21 George V, 1931

THE HOUSE OF COMMONS OF CANADA.

BILL 17.

An Act for granting to His Majesty certain sums of money for the public service of the financial year ending the 31st March, 1931.

MOST GRACIOUS SOVEREIGN,

Preamble.

WHEREAS it appears by message from the Deputy of His Excellency the Administrator of the Government of Canada, and the estimates accompanying the said message, that the sums hereinafter mentioned are required to defray certain expenses of the public service of Canada, not otherwise provided for, for the financial year ending the thirty-first day of March, one thousand nine hundred and thirty-one, and for other purposes connected with the public service: May it therefore please Your Majesty that it may be enacted, and be it enacted by the King's Most Excellent Majesty, by and with the advice and consent of the Senate and House of Commons of Canada, that:—

Short title.

1. This Act may be cited as *The Appropriation Act, No. 1, 1931.*

$6,148,655.29 granted for 1930-31.

2. From and out of the Consolidated Revenue Fund there may be paid and applied a sum not exceeding in the whole six million, one hundred and forty-eight thousand, six hundred and fity-five dollars and twenty-nine cents towards defraying the several charges and expenses of the public service, from the first day of April, one thousand nine hundred and thirty to the thirty-first day of March, one thousand nine hundred and thirty-one, not otherwise provided for, and set forth in Schedule A to this Act.

$13,694,008.93 granted for 1930-31.

3. From and out of the Consolidated Revenue Fund there may be paid and applied a sum not exceeding in the whole thirteen million, six hundred and ninety-four thousand, eight dollars and ninety-three cents, towards

defraying the several charges and expenses of the public service, from the first day of April, one thousand nine hundred and thirty, to the thirty-first day of March, one thousand nine hundred and thirty-one, not otherwise provided for, and set forth in Schedule B to this Act.

Account to be rendered in detail.

4. A detailed account of the sums expended under the authority of this Act shall be laid before the House of Commons of Canada during the first fifteen days of the then next session of Parliament.

SCHEDULE A.

Based on Further Supplementary Estimates, 1930-31. The amount hereby granted is $6,148,655.29.

SUMS granted to His Majesty by this Act for the financial year ending 31st March, 1931, and the purposes for which they are granted.

No. of Vote	Service	Amount	Total
		$ cts.	$ cts.
	CIVIL GOVERNMENT		
1	Agriculture—		
	Contingencies—Further amount required	3,000 00	
2	Civil Service Commission—		
	Contingencies—Further amount required	20,000 00	
3	Insurance—		
	Contingencies—Further amount required	11,500 00	
4	Justice—		
	Contingencies—Further amount required	2,500 00	
5	Marine—		
	Salaries—Further amount required for an Assistant Private Secretary	1,710 00	
	Contingencies—Further amount required	13,000 00	
6	National Defence—		
	Contingencies—Further amount required	10,000 00	
			61,710 00
	ADMINISTRATION OF JUSTICE		
7	Supreme Court of Canada—		
	Law books and books of reference for Library, and binding of same—Further amount required	.....	2,550 00
	LEGISLATION		
	THE SENATE		
8	Salaries and contingent expenses—Further amount required	7,296 39	
	HOUSE OF COMMONS		
9	Expenses of Committees, clerical assistance, etc.—Further amount required	6,000 00	
	Contingencies—Further amount required	18,500 00	
	Estimates of Sergeant-at-Arms—Further amount required	23,000 00	
			54,796 39
	AGRICULTURE		
10	Fruit—Further amount required	20,000 00	
11	Live Stock—Further amount required	100,000 00	
12	Health of Animals—Administration of the Animal Contagious Diseases Act and Meat and Canned Foods Act—Further amount required	300,000 00	
13	Administration of the Destructive Insect and Pest Act—Further amount required	20,000 00	
14	Publications—Further amount required	3,000 00	
			443,000 00
	PENSIONS		
15	Salaries and contingent expenses of the Board of Pension Commissioners for Canada—Further amount required	.....	40,000 00

SCHEDULE A—*Continued*

No. of Vote	Service	Amount	Total
		$ cts.	$ cts.
	RAILWAYS AND CANALS		
	(Chargeable to Capital)		
16	Welland Ship Canal; Construction and betterments—Further amount required		2,000,000 00
	PUBLIC WORKS		
	(Chargeable to Capital)		
	PUBLIC BUILDINGS		
17	Ottawa—Addition to Central Heating Plant—Further amount required	21,500 00	
	Ottawa—National Research Council Laboratories and equipment—Further amount required	41,330 00	
		62,830 00	
	HARBOURS AND RIVERS		
18	Burlington Channel—Improvements—Further amount required	151,495 00	
	Port Arthur and Fort William—Harbour improvements—Further amount required	288,530 00	
		440,025 00	
			502,855 0
	PUBLIC WORKS		
	(Chargeable to Income)		
	PUBLIC BUILDINGS		
	Maritime Provinces Generally		
19	Dominion Public Buildings—Improvements and repairs, etc.—Further amount required	5,500 00	
	Quebec		
20	Ville Marie—Public Building—Further amount required	14,370 00	
	Ontario		
21	Dominion Public Buildings—Improvements, repairs, etc.—Further amount required	7,000 00	
	Sturgeon Falls—Public Building—Further amount required	1,873 95	
		8,873 95	
	Saskatchewan		
22	Dominion Public Buildings—Improvements, repairs, etc.—Further amount required	3,500 00	
	Alberta		
23	Delia—Public Building—Further amount required	2,000 00	

SCHEDULE A—*Continued*

No. of Vote	Service	Amount	Total
		$ cts.	$ cts.
	PUBLIC WORKS—*Continued*		
	(Chargeable to Income)—Continued		
	Rents, Repairs, Furniture, Heating, etc.		
	Ottawa Public Buildings and Grounds—		
	Elevator Attendants—Further amount required	2,700 00	
	Departments Generally—Char Service—Further amount required	23,300 00	
	Repairs, improvements, additions and maintenance—Further amount required	17,000 00	
	Water—Further amount required	2,250 00	
24	Rideau Hall—Amount required to complete payment for additional furniture and furnishings, including the purchase from the retiring Governor General of the Chinese Gallery	15,000 00	
	Dominion Public Buildings—		
	Fittings, general supplies and furniture—Further amount required	5,000 00	
	Light and Power—Further amount required	40,000 00	
	Supplies for caretakers—Further amount required	12,000 00	
		117,250 00	
	HARBOURS AND RIVERS		
	Nova Scotia		
	Breen's Pond—Breakwater extension—Further amount required	1,009 55	
	Lloyd's Cove (Sydney Mines)—Breakwater—Further amount required	3,086 14	
25	Lunenburg—Dredging—Further amount required	39,441 74	
	Meteghan—Breakwater extension—Further amount required	2,034 60	
	Meteghan—Harbour improvements—Further amount required	4,714 04	
	Yarmouth Harbour—Dredging—Further amount required	30,442 40	
		80,728 47	
	New Brunswick		
26	Fairhaven—Wharf repairs—Further amount required	2,218 12	
	Quebec		
	Anse à Louise (Cap des Rosiers)—Wharf—Further amount required	2,011 45	
	Baie des Sables—Wharf extension—Further amount required	2,063 80	
	Berthierville—Dredging—Further amount required	1,803 76	
	Grande Anse (Gaspé Co.)—Wharf—Further amount required	780 00	
	Lachine—Wharf repairs—Further amount required	2,123 63	
27	Laprairie—Extension of dyke—Further amount required	41,070 00	
	Louiseville—Dredging—Further amount required	3,026 49	
	Rivière Blanche (St. Ulric)—Wharf improvements and repairs—Further amount required	9,805 49	
	Rivière des Prairies—Improvements—Further amount required	10,031 04	
	Ste. Anne de la Pocatière—Wharf extension—Further amount required	1,461 65	
	St. Joachim—Wharf extension—Further amount required	15,629 24	
	Yamaska River (Baie Lavallière)—Dredging—Further amount required	18,752 20	
		108,558 75	

SCHEDULE A—*Continued*

No. of Vote	Service	Amount	Total
		$ cts.	$ cts.
	PUBLIC WORKS—*Concluded*		
	(Chargeable to Income—Concluded		
	HARBOURS AND RIVERS—*Continued*		
	Ontario		
28	Cobourg—Harbour improvements—Further amount required..	48,995 40	
	Port Elgin—Breakwater repairs—Further amount required....	2,909 93	
	Sarnia—Harbour improvements—Further amount required....	11,770 00	
	Sault Ste. Marie—Harbour improvements—Further amount required.....	56,556 58	
		120,231 91	
	British Columbia		
29	Comox—Wharf repairs.....	2,200 00	
	Fraser River—In full and final settlement of claim of Coast Quarries Ltd., Vancouver, B.C., in connection with their contract No. 15,942 for section 5 of the North Jetty at Steveston, B.C.....	12,260 16	
		14,460 16	
	DREDGING		
30	Dredging—Maritime Provinces—Further amount required.....	25,000 00	
	ROADS AND BRIDGES		
31	Dominion Roads and Bridges Generally—Further amount required.....	10,100 00	
	Interprovincial Bridge over Ottawa River at Hawkesbury, the Quebec Government to contribute one-third of cost of construction only, the Ontario Government to contribute one-fourth of cost of construction and to pay annually one-fourth the maintenance costs—Further amount required..	28,300 00	
		38,400 00	
	MISCELLANEOUS		
32	Accounts Branch—Salaries of agents, clerks, travelling and contingent expenses of outside service—Further amount required.....	2,500 00	
	Compensation to C. S. Boone Dredging & Construction Co. for loss sustained as a result of an injunction which forced delay in its dredging contract at Goderich in 1929.....	630 89	
	To pay Sin-Mac Lines Ltd., half the cost of service and equipment in connection with the recovery of bodies and the blowing up of the drill boat *King* in Brockville Narrows..	3,173 23	
		6,304 12	
			547,395 48
	LIGHTHOUSE AND COAST SERVICE		
33	Construction, maintenance and supervision of aids to navigation, including salaries and allowances to lightkeepers—Further amount required.....	.....	200,000 00

SCHEDULE A—*Continued*

No. of Vote	Service	Amount	Total
		$ cts.	$ cts.
	MINES AND GEOLOGICAL SURVEY		
	Mines Branch—		
34	For maintenance of the Peat Plant at Alfred, Ontario—Further amount required	1,450 00	
	Geological Survey—		
35	For publication of English and French editions of reports, maps, illustrations, etc.—Further amount required	25,600 00	27,050 00
	LABOUR		
36	Annuities Act—Further amount required	30,000 00	
37	Combines Investigation Act—Further amount required	15,000 00	
38	Conciliation and Labour Act—Further amount required	15,000 00	60,000 00
	PUBLIC PRINTING AND STATIONERY		
39	Printing, Binding and Distributing the Annual Statutes—Further amount required		1,433 63
	INDIANS		
	Prince Edward Island—		
40	Relief for destitute Indians—Further amount required	1,000 00	
	Nova Scotia—		
41	Relief for destitute Indians—Further amount required	8,000 00	
	Medical and hospital attendance—Further amount required	1,000 00	
		9,000 00	
	New Brunswick—		
42	Relief for destitute Indians—Further amount required	7,000,00	
	Medical and hospital attendance—Further amount required	3,500 00	
		10,500 00	
	Ontario and Quebec—		
43	Relief for destitute Indians—Further amount required	50,000 00	
	Medical and hospital attendance—Further amount required	50,000 00	
		100,000 00	
	Manitoba, Saskatchewan, Alberta and Northwest Territories—		
44	Relief for destitute Indians—Further amount required	25,000 00	
	British Columbia—		
45	Relief for destitute Indians—Further amount required	25,000 00	
	Yukon—		
46	Relief for destitute Indians—Further amount required	3,000 00	
	General (Remote districts)—		
47	Relief for destitute Indians—Further amount required	50,000 00	
	Indian Education—		
48	Further amount required	245,000 00	468,500 00
	GOVERNMENT OF THE NORTHWEST TERRITORIES		
49	Contribution to new hospital at Fort Simpson, N.W.T.		20,000 00

SCHEDULE A—*Concluded*

No. of Vote	Service	Amount	Total
		$ cts.	$ cts.
	DOMINION LANDS AND PARKS		
50	Amount required to pay for relief provided by way of necessary supplies of food, clothing, fuel, etc., also fodder for animals, to needy settlers of the Provinces of Alberta and Saskatchewan by cooperation and agreement with the Provincial Governments or otherwise, and under regulations made by the Governor-in-Council		10,677 74
	PENSIONS AND NATIONAL HEALTH		
51	Unemployment relief—Further amount required		90,000 00
	MISCELLANEOUS		
52	Expenses under the Canada Temperance Act—Further amount required	1,263 41	
53	Expenses under the Naturalization Act—Further amount required	1,790 00	3,053 41
	POST OFFICE—OUTSIDE SERVICE		
54	Miscellaneous—For printing and stationery—Further amount required		375,623 18
	TRADE AND COMMERCE		
55	Printing of Parliamentary and Departmental Publications—Further amount required	13,500 00	
56	Dominion Bureau of Statistics—Further amount required	40,000 00	53,500 00
			4,962,144 83
	GOVERNOR GENERAL'S WARRANTS, 1930-31		
57	Relief of fire sufferers at Hebertville Station, Quebec (Governor General's Warrant of September 26, 1930)	5,000 00	
58	Administration, Combines Investigation Act (Governor General's Warrant of September 30, 1930)	50,000 00	
59	Repairs—Central Heating Plant, Ottawa (Governor General's Warrant of October 24, 1930)	25,000 00	
60	Relief of pensioners (Governor General's Warrant of November 20, 1930)	275,000 00	
61	Removal, Ordnance Stores from Ross Rifle Factory Buildings, Quebec—(Governor General's Warrant of November 27, 1930)	26,000 00	
62	Relief of pensioners (Governor General's Warrant of February 17, 1931)	225,000 00	
63	Relief of pensioners (Governor General's Warrant of March 6, 1931)	75,000 00	681,000 00
	UNPROVIDED ITEMS, 1929-30		
64	To cover unprovided items, 1929-30, as per Auditor General's Report, Vol. 1, page 5, 1929-30	505,510 46	505,510 46
			1,186,510 46
	Total		6,148,655 29

SCHEDULE B.

Based on Further Supplementary Estimates, 1930-31. The amount hereby granted is $13,694,008.93.

SUMS granted to His Majesty by this Act for the financial year ending 31st March, 1931, and the purposes for which they are granted.

No. of Vote	Service	Amount	Total
		$ cts.	$ cts.
	RAILWAYS, CANADIAN NATIONAL STEAMSHIPS AND MARITIME FREIGHT RATES ACT		
	LOANS TO CANADIAN NATIONAL RAILWAY COMPANY		
65	Amount not exceeding $11,410,400.85 to meet expenditures made or indebtedness incurred (where amounts available from net operating income or investments may be insufficient) by or on behalf of the Canadian National Railway Company, herein called "the Company" or any Company specified or referred to in Chapter 172 of the Revised Statutes of Canada, 1927, and Chapter 13 of the Statutes of 1920, or any Company formed by way of amalgamation or consolidation of any such companies, or now or hereafter comprised in the Canadian National Railways or by the Company in respect of any railways, properties and works entrusted to it from time to time under the provisions of Section 19 of Chapter 172 of the Revised Statutes of Canada, 1927, or any one or more of such companies, on any or all of the following accounts, such expenditures or indebtedness being herein called authorized expenditures: *(a)* Interest on securities, notes and other obligations: rentals for lease of lines and equipment; *(b)* Equipment Principal Payments; Sinking Funds; Miscellaneous Maturing or Matured notes and other obligations secured or unsecured: *(c)* Operating Income deficit, whenever incurred or ascertained: *(d)* Construction and betterments, including co-ordinations; acquisition of real or personal property, and Working Capital: *(e)* Acquisition of stock or securities of the Grand Trunk Western Railroad Company when duly issued under the authority of the Interstate Commerce Commission. The stock or securities so acquired to be deposited with the Minister of Finance and Receiver General to be disposed of only when thereto authorized by the Governor-in-Council. *(f)* Acquisition of stock or securities of the Central Vermont Railway, Inc. when duly issued under the authority of the Interstate Commerce Commission. The stock or securities so acquired to be deposited with the Minister of Finance and Receiver General to be disposed of only when thereto authorized by the Governor-in-Council. The amount herein authorized may be applied from time to time to meet authorized expenditures in the discretion of the Governor-in-Council. *(a)* In respect of railways, properties and works entrusted to the Company as aforesaid: *(b)* In respect of railways, properties and works not so entrusted: by way of loans in cash, or by way of guarantee, or partly one way and partly the other, subject, however, as follows:		

SCHEDULE B—*Continued*

No. of Vote	Service	Amount	Total
		$ cts.	$ cts.
	RAILWAYS, CANADIAN NATIONAL STEAMSHIPS AND MARITIME FREIGHT RATES ACT—*Continued*		
	LOANS TO CANADIAN NATIONAL RAILWAY COMPANY —*Continued*		
65	If by way of loans from His Majesty, the amount or amounts advanced to any one or more of the said Companies shall be repayable on demand, with interest payable half-yearly at the rate fixed from time to time by the Governor-in-Council, secured if and when directed by the Governor-in-Council by mortgage or mortgages upon such properties, in such form and containing such terms and conditions, not inconsistent herewith, as the Governor-in-Council may approve. If by way of loans from persons other than His Majesty (without the guarantee of His Majesty) the amounts, terms and conditions of such loans shall be such as the Governor-in-Council may from time to time approve. If by way of guarantee, any such guarantee may be either a general guarantee covering the total amount of the issue, or by a separate guarantee endorsed on each obligation, and may be of the principal, interest and sinking funds (if any) of the notes, obligations or securities of one or more of the said Companies specified by the Governor-in-Council, which notes, obligations or securities the Companies so specified are hereby authorized to make and issue from time to time, provided that the total principal amount thereof at any one time outstanding shall not, together with any part of the loans represented by cash, exceed the total amount mentioned in this vote,—namely $11,410,400.85, and any such guarantee may be signed by the Minister of Finance or such other person as the Governor-in-Council may authorize on behalf of His Majesty, in such form and on such terms and conditions as the Governor-in-Council may determine to be appropriate and applicable thereto. Any guarantee so signed shall be conclusive evidence for all purposes of the validity of the guarantee and that the provisions of this enactment have been complied with. Should temporary loans be made or negotiated before the lapse of this appropriation either from His Majesty or other persons, guaranteed notes, obligations or securities may subsequently be issued under the provisions of the preceding paragraph of this enactment to renew, refund or adjust such loans, or any part thereof. Each Company herein mentioned or referred to is hereby authorized to aid and assist, in any manner any other or others of the said Companies, which expression as used here and hereinafter shall include the Canadian Government Railways, entrusted as aforesaid, and, without limiting the generality of the foregoing, may for its own requirements and also for the requirements of any or all of such other Companies from time to time: *(a)* Issue notes, obligations or other securities, joint or several, at discretion, for the purpose of any guarantee made or to be made under the provisions of this enactment; *(b)* Apply the proceeds of any such guaranteed issue, or the amount of loans received by virtue of this enactment, in meeting authorized expenditures on its own account or on account of any or all of such other Companies. *(c)* Made advances for the purpose of meeting authorized expenditures to any or all of such other Companies, upon or without any security, at discretion. No purchaser of such guaranteed notes, securities or obligations shall be under any obligation to inquire into the application of the proceeds of any guaranteed issue.		

SCHEDULE B—*Concluded*

No. of Vote	Service	Amount	Total
		$ cts.	$ cts.
	RAILWAYS, CANADIAN NATIONAL STEAMSHIPS AND MARITIME FREIGHT RATES ACT—*Concluded*		
	LOANS TO CANADIAN NATIONAL RAILWAY COMPANY—*Concluded*		
65	Further amount required, in addition to the sum of $51,600,000 already appropriated, due to increase in the amount of deficit arising from operations in the year 1930.....	11,410,400 85	
	LOAN TO CANADIAN GOVERNMENT MERCHANT MARINE, LTD.		
66	Loan to the Canadian National Steamships (Canadian Government Merchant Marine, Limited), repayable on demand with interest at a rate to be fixed by the Governor-in-Council, upon such terms and conditions as the Governor-in-Council may determine, and to be applied in payment of:— Deficits in operation of the Company and of the vessels under the Company's control during the year ending December 31, 1930. Additional amount required in excess of the sum of $400,000 already appropriated.....	434,210 89	
	LOAN TO CANADIAN NATIONAL (WEST INDIES) STEAMSHIPS, LTD.		
67	Loan to the Canadian National (West Indies) Steamships, Limited, repayable on demand with interest at a rate to be fixed by the Governor-in-Council, upon such terms and conditions as the Governor-in-Council may determine, and to be applied in payment of:— Deficits in operation of the Company and of the vessels under the Company's control during the year ending December 31, 1930, and Interest requirements. Additional amount required in excess of the sum of $870,000 already appropriated.....	122,730 62	
		556,941 51	
	MARITIME FREIGHT RATES ACT		
68	Additional amount, in excess of the sum of $4,750,000 already appropriated, required to provide for the payment from time to time to the Canadian National Railway Company of the deficit in receipts and revenues, occurring during the year 1930, of the Eastern Lines, as provided by the Maritime Freight Rates Act:— (a) Amount of the deficit (less that amount thereof occurring on account of the reduction in tolls under the application of the Maritime Freight Rates Act) in the receipts and revenues.....	1,726,666 57	
	Total.....	.....	13,694,008 93

Second Session, Seventeenth Parliament, 21 George V, 1931

THE HOUSE OF COMMONS OF CANADA.

BILL 18.

An Act to amend the Civil Service Act.
(Returned Soldiers' Preference.)

First reading, March 30, 1931.

Mr. BOULANGER

OTTAWA
F. A. ACLAND
PRINTER TO THE KING'S MOST EXCELLENT MAJESTY
24881 1931

2nd Session, 17th Parliament, 21 George V, 1931

THE HOUSE OF COMMONS OF CANADA.

BILL 18.

An Act to amend the Civil Service Act.
(Returned Soldiers' Preference.)

HIS Majesty, by and with the advice and consent of the Senate and House of Commons of Canada, enacts as follows:—

1. Section twenty-nine of the *Civil Service Act*, chapter twenty-two of the Revised Statutes of Canada, 1927, is amended by adding thereto the following subsection:—

Preference to Canadian Nationals only.

"(5) Notwithstanding anything to the contrary in this section, or in any regulations made by the Civil Service Commission, the preference mentioned in subsection four of this section shall be granted only in the case of Canadian Nationals as defined in section two of chapter twenty-one of the Revised Statutes of Canada, 1927, or as defined in any amendment or re-enactment thereof."

2. Subsection one of section thirty-three of the said Act is repealed and the following is substituted therefor:—

Appointees must be British subjects of five years' residence.

"**33.** No person shall, without the authority of the Governor in Council, given separately for each individual case, be admitted to any examination unless he is a natural born or naturalized British subject, and also has been a resident of Canada for at least five years."

EXPLANATORY NOTES.

1. The object of this subsection, which is new is to provide that the preference, commonly referred to as "the returned soldiers' preference" shall be granted Canadian soldiers only.

2. The underlined words on the opposite page are new. The word *five* is being substituted for the word *three*.

The intention is to do away with such regulations of the Civil Service Commission as seem to be contrary to the spirit of the Civil Service Act, as for example rule No. 11 which reads as follows:—

"11. In cases where, after due publicity, the Commission has been unable to secure an adequately qualified applicant with the necessary three years residence in Canada, persons may be admitted to examination despite the fact that they have not resided in Canada for three years, provided they are otherwise qualified under the law and regulations.".

Second Session, Seventeenth Parliament, 21 George V, 1931

THE HOUSE OF COMMONS OF CANADA.

BILL 19.

An Act to amend the Criminal Code (Unlawful Assemblies).

First reading, March 30, 1931.

Mr. WOODSWORTH.

OTTAWA
F. A. ACLAND
PRINTER TO THE KING'S MOST EXCELLENT MAJESTY
24144 1931

2nd Session, 17th Parliament, 21 George V, 1931

THE HOUSE OF COMMONS OF CANADA.

BILL 19.

An Act to amend the Criminal Code (Unlawful Assemblies).

R.S., c. 36.

HIS Majesty, by and with the advice and consent of the Senate and House of Commons of Canada, enacts as follows:—

1. Section eighty-seven of the *Criminal Code*, chapter thirty-six of the Revised Statutes of Canada, 1927, is amended by adding the following subsection thereto:—

Right of discussion of public affairs preserved.

"(4) Nothing in this section shall restrict or interfere with the right of all persons peacefully to assemble for the purpose of discussing or hearing any discussion upon any matter of public interest, and such persons when so assembled shall not become an unlawful assembly merely by reason of speeches made to them or discussion carried on by them unless the general nature and character of such speeches or discussion would be likely, in the opinion of firm and reasonable persons, to cause an immediate breach of the peace."

Explanatory Note.

This Bill is intended simply to provide a safe-guarding clause to insure that the general nature and character of speeches upon public affairs must be the ground for regarding any meeting as unlawful.

Second Session, Seventeenth Parliament, 21 George V, 1931

THE HOUSE OF COMMONS OF CANADA.

BILL 20.

An Act respecting a certain patent of A. R. Wilfley & Sons, Inc.

First reading, April 1, 1931.

(PRIVATE BILL).

Mr. ANDERSON.
(Toronto—High Park)

OTTAWA
F. A. ACLAND
PRINTER TO THE KING'S MOST EXCELLENT MAJESTY
23938 1931

2nd Session, 17th Parliament, 21 George V, 1931

THE HOUSE OF COMMONS OF CANADA.

BILL 20.

An Act Respecting a certain patent of A. R. Wilfley & Sons, Inc.

Preamble

WHEREAS A. R. Wilfley & Sons, Inc., a corporation of the State of Colorado in the United States of America, and having its head office in the city of Denver in the said State, has by its petition set forth that it is the owner by assignment of a certain patent for centrifugal pumps for which one Arthur R. Wilfley of the city and county of Denver in the State of Colorado, United States of America, pursuant to the provisions of the *Patent Act*, on the 7th day of October, 1919, made application, which said application was filed under Serial No. 233,888, and was allowed by the Commissioner of Patents on the 30th day of January, 1920, and issued to patent under No. 198,319 on the 16th day of March, 1920, and which said patent became void on the 16th day of March, 1926, through the failure of the said A. R. Wilfley to pay the fees payable six years from the grant of the patent, pursuant to the terms of subsections one and three of section forty-three of *The Patent Act*, and whereas the said A. R. Wilfley & Sons, Inc., has by its petition prayed that it may be enacted as hereinafter set forth, and it is expedient to grant the prayer of the said Petition:

1906, c. 69.

1923, c. 23.

Therefore His Majesty, by and with the consent of the Senate and the House of Commons of Canada, enacts as follows:—

Extension of time for application ro revive patent.

1. If the said A. R. Wilfley & Sons, Inc., or its assignee or other legal representative makes, within three months after the date of the passing of this Act, an application for an order restoring and reviving the patent mentioned in the preamble to this Act, notwithstanding non-payment of fees, the provisions of section forty-seven of the *Patent Act*, chapter one hundred and fifty of the Revised Statutes of Canada, 1927 except the two years' limitation of time for such application contained in the said section, shall

R.S., c. 127, c. 150.

Authority to Commissioner.

apply to such patent, and complying with those provisions the Commissioner of Patents may make either an order restoring and reviving the said patent or an order dismissing the application.

Second Session, Seventeenth Parliament, 21 George V, 1931

THE HOUSE OF COMMONS OF CANADA.

BILL 21.

An Act respecting The Montreal and Atlantic Railway Company.

First reading, April 1, 1931.

(PRIVATE BILL).

Mr. PICKEL.

OTTAWA
F. A. ACLAND
PRINTER TO THE KING'S MOST EXCELLENT MAJESTY
25268 1931

2nd Session, 17th Parliament, 21 George V, 1931

THE HOUSE OF COMMONS OF CANADA.

BILL 21.

An Act respecting The Montreal and Atlantic Railway Company.

Preamble. 1891, c. 68; 1893, c. 55.

WHEREAS, The Montreal and Atlantic Railway Company has by its petition prayed that it be enacted as hereinafter set forth, and it is expedient to grant the prayer of the said petition: Therefore His Majesty, by and with the advice and consent of the Senate and House of Commons of Canada, enacts as follows:—

Issue of bonds. Amount increased.

1. Notwithstanding the provisions of section eleven of chapter sixty-eight of the statutes of 1891, The Montreal and Atlantic Railway Company may issue bonds, debentures or other securities to the extent of forty thousand dollars per mile of its railway between the town of Farnham, in the province of Quebec, and the province line at the town of Newport, in the State of Vermont, and twenty-five thousand dollars per mile of its railway between Drummondville and Enlaugra, in the province of Quebec.

Explanatory Note.

1. Section eleven of chapter sixty-eight of the statutes of 1891, reads as follows:—

"**11.** The Company may issue bonds, debentures or other evidences of debt to the extent of twelve thousand five hundred dollars per mile of its railway actually constructed, and may mortgage all or any of its properties as security therefor."

Second Session, Seventeenth Parliament, 21 George V, 1931

THE HOUSE OF COMMONS OF CANADA.

BILL 22.

An Act respecting the construction and maintenance of a bridge over the river St. Lawrence at Caughnawaga.

First reading, April 1, 1931.

(PRIVATE BILL.)

Mr. DUPUIS.

OTTAWA
F. A. ACLAND
PRINTER TO THE KING'S MOST EXCELLENT MAJESTY
25276 1931

2nd Session, 17th Parliament, 21 George V, 1931

THE HOUSE OF COMMONS OF CANADA.

BILL 22.

An Act respecting the construction and maintenance of a bridge over the river St. Lawrence at Caughnawaga.

Preamble.

WHEREAS it is in the interest of the cities, towns and villages situated in the electoral districts of Beauharnois, Châteauguay-Huntingdon and Napierville-Laprairie, on the south shore of river St. Lawrence and of the cities, towns and villages situated on the island of Montreal, and of the whole province of Quebec, to construct a bridge connecting the north and south shores of the river St. Lawrence opposite the Caughnawaga Indian reserve on Lake St. Louis, province of Quebec; and whereas to assure the construction, maintenance, repairs, operations and administration of such bridge a commission named "La Corporation du Pont du Lac St-Louis", with the powers necessary to those purposes, composed of five members appointed by the Lieutenant-Governor in Council, of the province of Quebec, has been created by a Special Act of the Legislature of the province of Quebec assented to the 22nd of March, 1928, the said Act subsequently amended by another Act assented to the 4th of April, 1930 (Schedules "A" and "B"); and whereas an Act of the Parliament of Canada authorizing the construction and maintenance of the said bridge and approving the site and plans of the said bridge, is necessary: Therefore His Majesty, by and with the consent of the Senate and House of Commons of Canada, enacts as follows:—

Construction of bridge authorized.

1. La Corporation du Pont du Lac St-Louis is authorized to construct, maintain, repair, operate and administer, under the powers to it already granted by the Legislature of the province of Quebec by special Acts hereto annexed as Schedules "A" and "B", a bridge and its approaches connecting the north and south shores of the river St. Lawrence opposite the Caughnawaga Indian reserve on Lake St. Louis in the province of Quebec.

Submission of plans for approval.

2. The plans and site of the said bridge and the approaches thereof shall be submitted for the approval of the Governor in Council and by him approved before the beginning of the works of construction of the said bridge.

SCHEDULE "A".

An Act respecting the construction and maintenance of a bridge over the river St. Lawrence at Caughnawaga.

[*Assented to, the 22nd of March, 1928.*]

WHEREAS, it is in the interest of the cities, towns and villages situated in the electoral districts of Beauharnois, Châteauguay-Huntingdon and Napierville-Laprairie on the south shore of river St. Lawrence, and of the cities, towns and villages situated on the Island of Montreal, and of the whole province, to construct a bridge connecting the north and south shores of the St. Lawrence opposite the Caughnawaga reserve, on Lake St. Louis; and whereas, to assure the construction of such bridge it is necessary to create a corporation with the powers necessary to this purpose; and whereas such bridge shall be a toll-bridge, the annual revenues therefrom, which cannot fail to increase, shall assure the maintenance, operation and administration of the said bridge and of its approaches: Therefore His Majesty, with the advice and consent of the Legislative Council and of the Legislative Assembly of Quebec, enacts as follows:—

1. The Lieutenant-Governor in Council may authorize the issuing of letters patent, under the Great Seal of the Province, for the purpose of forming a corporation under the name of "The Corporation of Lake St. Louis Bridge" or under whatever name he may deem fit to give in the letters patent or by supplementary letters patent. Such corporation shall be composed of five members, appointed in accordance with section 2, for the objects hereinafter mentioned.

2. The members of the corporation shall be appointed by Order of the Lieutenant-Governor in Council.

The corporation shall elect a president from among its members.

3. The affairs of the corporation shall be administered by its members, three of whom shall form a quorum.

4. Any member of the corporation may be dismissed for cause by an Order of the Lieutenant-Governor in Council.

5. The corporation shall not be dissolved by one or more vacancies among its members or by the disappearance of all its members.

6. In case of the vacancy of one or more or of all the members of the corporation, such vacancies shall be filled in the manner in which the appointment of the original members of the corporation was made.

7. The corporation shall appoint its officers and employees, and fix their remuneration, subject to the approval of the Lieutenant-Governor in Council.

8. The corporation may adopt and alter, from time to time, rules for its government and the conduct of its affairs.

9. As to the rest, the corporation shall be governed by the provisions of the Civil Code respecting corporations and it may:—

(a) Have a common seal and alter it at will;

(b) Appear before the courts;

(c) Administer its property and draw the revenues thereof, rent, sell, exchange, cede and alienate the same in any way whatsoever, or otherwise dispose of same;

(d) Borrow, subject to the provisions of section 14, on the credit of the corporation, in any lawful manner, all sums required to attain the objects for which it is incorporated;

(e) Issue bonds or other securities of the corporation and sell, exchange, pledge or give the same in guarantee;

(f) Hypothecate, mortgage or pledge the moveable or immoveable property, present or future, or the corporation, to assure the payment of such bonds or other securities, or to give a part only of these guarantees for the same object; and constitute the hypothec, mortgage or pledge, mentioned in this sub-paragraph, by a deed of trust in accordance with sections 10, 11, 12 and 13 of chapter 227 of the Revised Statutes, 1925, or in any other way;

(g) Hypothecate or mortgage the immoveables, or pledge or otherwise affect the moveables of the corporation, or give all such kinds of guarantees, to secure the payment of loans made otherwise than by bond issue, as well as the payment or execution of other debts, contracts or undertakings of the corporation;

(h) Adopt all by-laws, ordinances and rules necessary for its organization, government and management; the continuance of its existence; the administration of

its properties and employment of its funds; the realization of its purposes, and, generally, for the direction of its works and exercise of all its powers.

10. Subject to the competent authorities and the observance of the Dominion and Provincial laws in this connection, the object of the corporation shall be to construct, maintain, repair, operate and administer a bridge connecting the north the south shores of the St. Lawrence river opposite Caughnawaga reserve, on Lake St. Louis, as well as the approaches and roads giving access to the said bridge.

11. The plans and specifications of the said bridge and of its approaches and of the necessary incidental work must be approved by the Lieutenant-Governor in Council, upon the recommendation of the Minister of Public Works and Labour, without prejudice to any obligation prescribed by the terms of the contracts to be passed in accordance with section 12 of this act.

12. The corporation is authorized to make the contracts necessary for the purpose of this act, with all persons, corporations or companies.

13. The corporation is authorized to acquire, by agreement or by expropriation, all lands, immoveable rights, charges, leases for occupation, emphyteutic leases, constituted rents, or any other rights whatsoever for the approaches, abutments or other works necessary.

Any expropriation required for the purposes of this act shall be subject to the provisions of the Quebec Railway Act (Revised Statutes, 1925, chapter 230).

14. For the purposes aforesaid, the corporation is authorized, by means of debentures or otherwise, to contract one or more loans for a total amount of not more than one million seven hundred thousand dollars, repayable in a period not to exceed forty years and at a rate of interest of not more than five per cent payable yearly or half-yearly.

15. The proceeds of such loan or loans shall be used for paying the cost of the construction, maintenance, repair, operation and administration of the said bridge and approaches, and that of the acquisition of the necessary property, and for the payment of the remuneration of the officers and employees of the corporation, and of all other expenditure which the corporation may incur in the exercise of its powers.

16. The municipalities situated in whole or in part in the electoral districts and also in the Island of Montreal, as mentioned in the preamble of this act, are authorized to contribute towards the construction, maintenance, operation and administration of the said bridge, out of the general funds of the corporation or by means of a loan by by-law submitted to the electors accordingly the law governing same respecting the approval of by-laws.

17. The said bridge shall be subject to the tolls in accordance with a tariff approved by the Lieutenant-Governor in Council. Such tariff shall come into force only after its publication in the Quebec Official Gazette, and it may be amended in the same manner.

18. Such tolls shall be collected by the corporation and devoted to the payment of the expenses of the corporation, interest on loans and also to the creating of a sinking-fund sufficient to reimburse the annuities or the capital at maturity.

19. This act shall come into force on the day of its sanction.

(S.Q. 18 Geo. V, 1928, ch. 110.)

SCHEDULE "B".

An Act to amend the act respecting the construction and maintenance of a bridge over the river St. Lawrence at Caughnawaga.

[*Assented to, the 4th of April, 1930.*]

HIS Majesty, with the advice and consent of the Legislative Council and of the Legislative Assembly of Quebec, enacts as follows:—

1. Section 9 of the act 18 George V, chapter 110, is amended by adding thereto, after the word: "corporation", in the second line of sub-paragraph *g* thereof, the words: "including the tolls".

2. Section 12 of the said act is amended by adding thereto, after the word: "with", in the second line thereof, the words: "the Federal Government and".

3. The said act is amended by adding thereto, after section 15 thereof, the following sections:—

"**15A.** The Lieutenant-Governor in Council may authorize the Minister of Public Works and Labour to make

into a contract, for and in the name of the Government of this Province, with the corporation to aid in the construction, maintenance and operation of the said bridge over the river St. Lawrence, opposite the Caughnawaga reserve, on lake St. Louis.

"**15B.** In the same contract or in any subsequent contract, it may be provided that, in case the amount of money derived from the tolls established under section 17 of this act is insufficient to cover every year at maturity the sums required to pay the annual operating and maintenance charges of the said bridge and of its approaches, the interest on any loan contracted for the purpose of constructing said bridge and its approaches, and the sinking-fund of the loan, the Government shall undertake to pay two-thirds of the said annual deficit to the corporation, as long as such deficit exists but for a period of not more than forty years.

"**15C.** The contributions provided for above shall be paid to those entitled thereto by the Provincial Treasurer, out of the consolidated revenue fund, upon the certificate of the Minister of Public Works and Labour declaring that the conditions of the contract have been observed up to the date thereof and specifying the amount due.

"**15D.** The Lieutenant-Governor in Council may order the insertion in the said contract of any other conditions not inconsistent with this Act, which might assure the construction, maintenance and operation of the bridge and at the same time better protect and secure the Province, as regards the obligations assumed by it under this act."

4. This act shall come into force on the day of its sanction.

(S.Q. 20 Geo. V, 1930, ch. 3.)

Second Session, Seventeenth Parliament, 21 George V, 1931

THE HOUSE OF COMMONS OF CANADA.

BILL 23.

An Act respecting The Essex Terminal Railway Company.

First reading, April 1, 1931.

(PRIVATE BILL)

Mr. ROBINSON.

OTTAWA
F. A. ACLAND
PRINTER TO THE KING'S MOST EXCELLENT MAJESTY
23939 1931

2nd Session, 17th Parliament, 21 George V, 1931

THE HOUSE OF COMMONS OF CANADA.

BILL 23.

An Act respecting The Essex Terminal Railway Company.

Preamble. 1902, c. 62; 1904, c. 76; 1906, c. 93; 1910, c. 98; 1915, c. 43; 1917, c. 51; 1919, c. 84; 1921, c. 60; 1923, c. 77; 1925, c. 60; 1927, c. 84; 1929, c. 68;

WHEREAS The Essex Terminal Railway Company has, by its petition, prayed that it be enacted as hereinafter set forth, and it is expedient to grant the prayer of the said petition: Therefore His Majesty, by and with the advice and consent of the Senate and House of Commons of Canada, enacts as follows:

Extension of time for construction.

1. The Essex Terminal Railway Company, hereinafter called "the Company", may commence and construct the line of railway authorized by section one of chapter fifty-one of the statutes of 1917, namely, —

From a point on or near the navigable waters of the Detroit river, in or near the town of Ojibway, to a point at or near Pelton, in the County of Essex.

Limitation of time for commencement and completion.

2. If the said line is not commenced within two years, and is not completed and put in operation within five years from the passing of this Act, the powers of construction conferred upon the Company by Parliament, shall cease and be null and void as respects such part of the said line of railway as then remains uncompleted.

Second Session, Seventeenth Parliament, 21 George V, 1931

THE HOUSE OF COMMONS OF CANADA.

BILL 24.

An Act to define Canadian Nationals and to provide for loss or renunciation of Canadian Nationality.

First reading, April 14, 1931.

THE SECRETARY OF STATE.

OTTAWA
F. A. ACLAND
PRINTER TO THE KING'S MOST EXCELLENT MAJESTY
22334 1931

2nd Session, 17th Parliament, 21 George V, 1931

THE HOUSE OF COMMONS OF CANADA

BILL 24.

An Act to define Canadian Nationals and to provide for loss or renunciation of Canadian Nationality.

R.S., c. 21.

HIS Majesty, by and with the advice and consent of the Senate and House of Commons of Canada, enacts as follows:—

Short title.

1. This Act may be cited as *The Canadian Nationals Act, 1931*.

Definitions.

2. In this Act the following expressions have the meanings hereby assigned to them respectively, that is to say—

"Alien."

(a) "Alien" means a person who is not a British subject.

"Disability."

(b) "Disability" means the status of being a lunatic, idiot, or any other status of a similar nature.

"Domicile."

(c) "Domicile" means the place or country where a person resides and has the present intention to reside permanently.

"Canadian Domicile."

(d) "Canadian Domicile" means the person concerned resides in Canada and has the present intention to reside permanently in Canada, or that he resides out of Canada in the employ of the public service of the Government of Canada or of a Province of Canada.

"Loss of Canadian Domicile."

(e) "Loss of Canadian Domicile" means the voluntary residence out of Canada of the person concerned, not merely for a special or temporary purpose, but with the present intention to reside permanently out of Canada.

"Natural-born British Subject."

(f) "Natural-born British Subject" means a natural-born British subject as defined in Part I of the *Naturalization Act*.

"Naturalized British Subject."

(g) "Naturalized British Subject" means a person to whom a certificate of naturalization, which has not been revoked, has been granted in Canada under Part II of the *Naturalization Act*; or a person to whom a certificate of naturalization, which has not been revoked and which is lawful in Canada, has been granted in some other part of His Majesty's dominions.

"Secretary of State."

(h) "Secretary of State" means the Secretary of State of Canada.

Canadian Nationals defined.

3. The following classes of persons shall be deemed to be Canadian nationals, viz.:—

Born in Canada.

(a) Any person born in Canada;

Child born out of His Majesty's dominions.

(b) Any person born out of His Majesty's dominions whose father, at the time of such person's birth, was a Canadian national or possessed all the qualifications of a Canadian national as defined by this Act;

Natural-born British subject not born in Canada.

(c) Any natural-born British subject who, though not born in Canada, has Canadian domicile;

Wife and minor children of natural-born British subject.

(d) The wife and minor children of any natural-born British subject who themselves have Canadian domicile;

Naturalized British subject.

(e) A naturalized British subject, who has Canadian domicile;

Wife of naturalized British subject.

(f) The wife of a naturalized British subject, who is included, with her written consent, in his certificate of naturalization, or who married such naturalized British subject subsequent to the date of such certificate, and who herself has Canadian domicile;

Minor children of naturalized British subject.

(g) The minor children of a naturalized British subject, who are included in his certificate of naturalization or who were born subsequent to the date of such certificate, and who themselves have Canadian domicile.

Loss of status as Canadian national.

4. The status of Canadian national shall be lost:

By person born in Canada or his wife.

(a) By a person of either class defined in paragraphs (*a*) or (*b*) of section three of this Act, upon such person becoming an alien, or renouncing his Canadian nationality as in this Act provided;

By persons not born in Canada.

(b) By a person of either class defined in paragraphs (*c*), (*d*), (*e*), (*f*) or (*g*) of section three of this Act, upon such person becoming an alien, or losing Canadian domicile.

Declaration renouncing Canadian nationality.

5. (1) Any Canadian national born in or out of Canada, who, at the time of his birth or during his minority, became, under the law of the United Kingdom or of any self-governing dominion, a national also of the United Kingdom or of a self-governing dominion, may make a declaration renouncing his Canadian nationality if he is then of the full age of twenty one years and not under disability.

Declaration to be made before notary, etc.

(2) Such declaration may be made before a notary public or other person authorized by law to administer oaths in the locality in which the declaration is made and may be in the form set out in Schedule A to this Act.

Declaration to be transmitted to Secretary of State.

(3) The declarant shall transmit such declaration to the Secretary of State, and upon the Secretary of State being satisfied of the sufficiency of the declaration and that it has been duly executed, it shall be filed of record; whereupon the declarant shall cease to be a Canadian national.

A certified copy of such declaration shall thereupon be forwarded from the office of the Secretary of State to the declarant with an endorsement thereon that the original declaration has been filed of record.

Provisions respecting acquisition of Canadian domicile.

6. A British subject, who is not a Canadian national, to acquire Canadian domicile, must have been ordinarily resident in Canada for a period of at least two consecutive years; and an alien, to acquire Canadian domicile, must have been ordinarily resident in Canada for a period of at least five consecutive years:

Provided that the time spent by a person while confined in or an inmate of any penitentiary, gaol, reformatory, prison or asylum for the insane in Canada shall not be counted in the period of residence in Canada which is necessary in order to acquire Canadian domicile;

Provided also that when an order is issued pursuant to the provisions of the *Immigration Act* for the deportation of any person and an appeal therefrom has not been allowed by the Minister of Immigration and Colonization, or a permit to remain in Canada is issued by such Minister in the case of a person who has been previously landed in Canada within the meaning of the said Act and ordered deported, the time spent in Canada, while such order of deportation or permit is in force, shall not be counted in the period of residence which is necessary to acquire Canadian domicile; and provided further that no person, who belongs to any of the prohibited classes of immigrants within the meaning of the said Act, or who has unlawfully obtained admittance to Canada, shall be capable of acquiring Canadian domicile.

Presumption of loss of Canadian domicile.

7. (1) When a Canadian national of either of the classes defined in paragraphs (*d*), (*e*), (*f*) and (*g*) of section three of this Act shall have resided continuously for five years out of Canada, he shall be presumed to have lost Canadian domicile and to have ceased to be a Canadian national.

Presumption may be rebutted by certificate of certain officers.

(2) Such presumption of the loss of Canadian domicile may be rebutted by the certificate of any diplomatic or consular officer of His Majesty in any foreign country, or of any Commissioner or officer of Canada in the United Kingdom or in any other part of His Majesty's dominions, in the form set out in Schedule B to this Act, that such person appeared before him, before the expiration of the said period of five years, and satisfied him that he has maintained substantial connexion with and interest in Canada, and that it is his intention to retain his Canadian domicile.

Certificate to be transmitted to Secretary of State.

(3) Such certificate shall forthwith be transmitted to the Secretary of State, and upon the Secretary of State being satisfied of the sufficiency of the certificate and that

it has been duly executed, it shall be filed of record; and a certified copy of such certificate shall thereupon be forwarded from the office of the Secretary of State to such person with an endorsement thereon that the original certificate has been filed of record.

Copy of certificate.

(4) In the case of a naturalized British subject, the certified copy of such certificate shall be endorsed on or attached to the certificate of naturalization.

Secretary of State may refuse to sanction extension.

(5) The Secretary of State may, at his discretion, in any particular case and at any time, refuse to sanction any extension of the said period of five years in the case of a naturalized British subject who has resided continuously for three years in his country of origin.

Effect of such certificate.

(6) The effect of such certified copy of such certificate shall be to extend the said period of five years for a further term of two years; and thereafter it may be extended from year to year in the same manner by the Secretary of State, provided that he is satisfied that the person concerned has then the present intention of retaining Canadian domicile and adduces in favour of that intention adequate evidence that he has maintained substantial connexion with and interest in Canada as aforesaid; provided also that the Secretary of State may, at his discretion, in any particular case and at any time, refuse to sanction any extension for any such further term of one year.

Extension beyond seven years.

(7) In the case of a naturalized British subject such certificate shall not be extended beyond seven years, if such person, since the date of the grant of his certificate of naturalization, has been for not less than seven years ordinarily resident out of Canada otherwise than in the service of the Government of Canada, or of the Government of one of the Provinces of Canada, or as the representative of a Canadian national, firm or company carrying on business out of Canada, or as the representative of an institution established in Canada, or in case such person has not otherwise maintained, to the satisfaction of the Secretary of State, substantial connexion with and interest in Canada.

Repeal.

8. The *Canadian Nationals Act*, chapter twenty-one of the Revised Statutes of Canada, 1927, is hereby repealed.

SCHEDULE A.

Declaration of Renunciation of Canadian Nationality.

Schedule A.

I,.....of the .....of.....in the.....of..... do hereby declare:—

1. That I am a Canadian national within the definition of the Canadian Nationals Act by reason of the fact that .....

2. That I am also a national of..... by reason of the fact that.....

3. That I am of the full age of twenty-one years and under no disability.

4. That I hereby renounce my Canadian nationality and declare that it is my desire to be considered and treated as a national of.....

Made and subscribed before me at the..... of..... in the.....of. ..... this.....day of .....19.....

A Notary Public or other person authorized to administer oaths.

SCHEDULE B.

CERTIFICATE OF DIPLOMATIC OR CONSULAR OFFICER.

Schedule B

I, the undersigned,.....
(Name and description of diplomatic

.....
or consular officer, or commissioner or officer of Canada.)

do hereby certify that.....
appeared before me at.....
on the.....day of.....19....,
and proved to my satisfaction that he had been absent from Canada, since the.....day of.....,
19...., but that he had, in the meantime, maintained substantial connexion with and interest in Canada,

(State whether as the representative of a Canadian national, firm or company carrying on business, or as representative of an institution established in Canada, or in the service of the Government of Canada or of the Government of a Province of Canada, or other substantial connexion.)

.....

.....

and that it is his present intention to retain his Canadian domicile.

Dated at.....the.....
day of....., 19.....

Name and description of officer.

Second Session, Seventeenth Parliament, 21 George V, 1931

THE HOUSE OF COMMONS OF CANADA.

BILL 25.

An Act for granting to His Majesty certain sums of money for the public service of the financial year ending the 31st March, 1932.

AS PASSED BY THE HOUSE OF COMMONS, 15th APRIL, 1931.

OTTAWA
F. A. ACLAND
PRINTER TO THE KING'S MOST EXCELLENT MAJESTY
24904 1931

2nd Session, 17th Parliament, 21 George V, 1931

THE HOUSE OF COMMONS OF CANADA.

BILL 25.

An Act for granting to His Majesty certain sums of money for the public service of the financial year ending the 31st March, 1932.

MOST GRACIOUS SOVEREIGN,

Preamble.

WHEREAS it appears by message from His Excellency the Right Honourable the Earl of Bessborough, etc., etc., Governor General of Canada, and the estimates accompanying the said message, that the sums hereinafter mentioned are required to defray certain expenses of the public service of Canada, not otherwise provided for, for the financial year ending the thirty-first day of March, one thousand nine hundred and thirty-two, and for other purposes connected with the public service: May it therefore please Your Majesty that it may be enacted and be it enacted by the King's Most Excellent Majesty, by and with the advice and consent of the Senate and House of Commons of Canada, that:—

Short title.

1. This Act may be cited as *The Appropriation Act, No. 2, 1931.*

$40,199,447.43 granted for 1931-32.

2. From and out of the Consolidated Revenue Fund there may be paid and applied a sum not exceeding in the whole forty million, one hundred and ninety-nine thousand, four hundred and forty-seven dollars and forty-three cents towards defraying the several charges and expenses of the public service, from the first day of April, one thousand nine hundred and thirty-one, to the thirty-first day of March, one thousand nine hundred and thirty-two, not otherwise provided for, and being one-sixth of the amount of each of the several items to be voted, set forth in the Estimates for the fiscal year ending the thirty-first day of March, one thousand nine hundred and thirty-two, as laid before the House of Commons at the present session of Parliament.

$1,887,664.67 granted for 1931-32.

3. From and out of the Consolidated Revenue Fund there may be paid and applied a sum not exceeding in the whole one million, eight hundred and eighty-seven thousand, six hundred and sixty-four dollars and sixty-seven cents towards defraying the several charges and expenses of the public service, from the first day of April, one thousand nine hundred and thirty-one, to the thirty-first day of March, one thousand nine hundred and thirty-two, not otherwise provided for, and being one-sixth of the amount of each of the several items to be voted, set forth in the Schedule to this Act.

Account to be rendered in detail.

4. A detailed account of the sums expended under the authority of this Act shall be laid before the House of Commons of Canada during the first fifteen days of the then next session of Parliament.

SCHEDULE

Based on Estimates, 1931-32. The amount hereby granted is $1,887,664.67.

SUMS granted to His Majesty by this Act for the financial year ending 31st March, 1932, and the purposes for which they are granted.

No. of Vote	Service	Amount	Total
	CANADIAN NATIONAL STEAMSHIPS AND MARITIME FREIGHT RATES ACT	$ cts.	$ cts.
	LOAN TO CANADIAN GOVERNMENT MERCHANT MARINE, LTD.		
379	Loan to the Canadian National Steamships (Canadian Government Merchant Marine, Limited), repayable on demand with interest at a rate to be fixed by the Governor in Council upon such terms and conditions as the Governor in Council may determine, and to be applied in payment of:— Deficits in operation of the Company and of the vessels under the Company's control during the year ending December 31st, 1931	588,500 00	
	LOAN TO CANADIAN NATIONAL (WEST INDIES) STEAMSHIPS, LTD.		
380	Loan to the Canadian National (West Indies) Steamships, Limited, repayable on demand with interest at a rate to be fixed by the Governor in Council, upon such terms and conditions as the Governor in Council may determine, and to be applied in payment of:— Deficits in operation of the Company and of the vessels under the Company's control, during the year ending December 31st, 1931, and Interest Requirements	755,000 00	1,343,500 00
	MARITIME FREIGHT RATES ACT		
381	Amount required to provide for payment from time to time during the fiscal year 1931-32 of the difference, estimated by the Board of Railway Commissioners and certified by the said Board to the Minister of Railways and Canals, as and when required by him, occurring on account of the application of the Maritime Freight Rates Act, between the tariff tolls and the normal tolls (referred to in Section 9 of the said Act) on all traffic moved during 1931, under the tariffs, approved by the following companies:— Canada & Gulf Terminal Railway. Canadian Pacific Railway, including: Fredericton & Grand Lake Coal and Railway Co New Brunswick Coal and Railway Company. Cumberland Railway and Coal Co. Dominion Atlantic Railway. Maritime Coal Railway & Power Co. Sydney & Louisburg Railway. Temiscouata Railway	900,000 00	
382	Amount required to provide for the payment from time to time to the Canadian National Railway Company of the deficit in receipts and revenues, occurring in the year 1931, of the Eastern Lines, as provided by the Maritime Freight Rates Act:— *(a)* Amount of the deficit (less that amount thereof as in the next following paragraph specifically provided for) in the receipts and revenues	6,631,856 00	
	(b) Amount of the deficit in receipts and revenues occurring on account of the reduction in tolls under the application of the Maritime Freight Rates Act	2,450,632 00	9,982,488 00
	Total		11,325,988 00

Second Session, Seventeenth Parliament, 21 George V, 1931

THE HOUSE OF COMMONS OF CANADA.

BILL 26.

An Act respecting The Restigouche Log Driving and Boom Company.

First reading, April 16, 1931.

(PRIVATE BILL).

Mr. HANSON.

OTTAWA
F. A. ACLAND
PRINTER TO THE KING'S MOST EXCELLENT MAJESTY
24516 1931

2nd Session, 17th Parliament, 21 George V, 1931

THE HOUSE OF COMMONS OF CANADA.

BILL 26.

An Act respecting The Restigouche Log Driving and Boom Company.

Preamble. 1910, c. 155; 1925, c. 78.

WHEREAS The Restigouche Log Driving and Boom Company has by its petition represented that the powers granted it by chapter seventy-eight of the statutes of Canada, 1925, *An Act respecting The Restigouche Log Driving and Boom Company*, have never been exercised; and has prayed that the said Act be repealed, and it is expedient to grant the prayer of the said petition: Therefore His Majesty, by and with the advice and consent of the Senate and House of Commons of Canada, enacts as follows:—

Act of 1925 repealed.

1. The Act of the Parliament of Canada, namely, chapter seventy-eight of the statutes of 1925, entitled *An Act respecting The Restigouche Log Driving and Boom Company*, is hereby repealed.

Explanatory Notes.

1. Chapter 78 of the statutes of Canada, 1925, provides that The Restigouche Log Driving and Boom Company may issue renewal bonds not exceeding in the whole the sum of one hundred and fifty thousand dollars par value to replace bonds maturing and maturing due from time to time thereafter. The idea being that operators on the river, members of the Company, who contribute to the payment of the bonds maturing and maturing due, should be reimbursed by the issue of renewal bonds to them.

The directors have decided to reverse that policy and to pay off all bonds as they mature due out of the current assessment and hence desire the repeal of chapter 78 of the statutes of 1925.

The Restigouche Log Driving and Boom Company was incorporated as a Dominion Company by chapter 155 of the statutes of Canada, 1910, and is without share capital, the members of the Company being all the operators on the river having one hundred thousand feet of lumber and upwards passing through the boom in any given year, and while the amending Act, chapter 78 of the statutes of 1925, is being repealed, the Company still retains its charter and will continue to function.

Second Session, Seventeenth Parliament, 21 George V, 1931

THE HOUSE OF COMMONS OF CANADA.

BILL 27.

An Act respecting The Subsidiary High Court of the Ancient Order of Foresters in the Dominion of Canada.

First reading, April 16, 1931.

(PRIVATE BILL).

Mr. CHEVRIER.

OTTAWA
F. A. ACLAND
PRINTER TO THE KING'S MOST EXCELLENT MAJESTY
25275 1931

2nd Session, 17th Parliament, 21 George V, 1931

THE HOUSE OF COMMONS OF CANADA.

BILL 27.

An Act respecting The Subsidiary High Court of the Ancient Order of Foresters in the Dominion of Canada.

Preamble. 1898, c. 91; 1901, c. 101; 1908, c. 108; 1912, c. 93; 1923, c. 108; 1927, c. 106.

WHEREAS The Subsidiary High Court of the Ancient Order of Foresters in the Dominion of Canada, incorporated by chapter ninety-one of the statutes of 1898, hereinafter called "the Society", has by its petition prayed for the passing of an Act authorizing the Society to reallocate certain premiums to be hereafter collected, and declaring that the Executive Council and the High Court Officers of the Society elected in 1927, or regularly appointed subsequently, may hold office until the High Court meeting of the Society in 1931, and it is expedient to grant the prayer of the said petition: Therefore His Majesty, by and with the advice and consent of the Senate and House of Commons of Canada, enacts as follows:—

1. Chapter ninety-one of the Statutes of 1898, *An Act to incorporate The Subsidiary High Court of the Ancient Order of Foresters in the Dominion of Canada*, is amended by inserting therein the following section after section ten thereof:—

Management Fund.

"**10A.** (1) The Society may maintain a Management Fund to which shall be credited all dues and other sums intended to be used for the payment of expenses and administration of the Society other than those of the Insurance Fund, and all the said expenses shall be payable out of the said Management Fund; and the Society may make provision in its constitution whereby in the event of there being a deficiency in the said Management Fund and a surplus above all liabilities in any one or more of the Benefit Funds of the Society other than the said Insurance Fund, the High Court may at any session thereof provide for the allocation to the said Management Fund of such portion of the premiums falling due in the said

Benefit Funds during any twelve months period thereafter or until the next meeting of the High Court, as the Actuary of the Society may recommend; the amount allocated to the Management Fund during any such period shall not exceed, however, two months' premiums in the said Benefit Funds.

Notice of allocation to the management Fund.

(2) Notice of intention to make an allocation to the Management Fund of the premiums or any portion thereof falling due in any month in the said Benefit Funds shall be given in the official organ of the Society at least one month before the due date of such premiums."

Executive Council and High Court officers may hold office.

2. Notwithstanding anything contained in the general by-laws of the Society, and notwithstanding the failure of the Society to hold a meeting of the High Court in the year 1929, the members of the Executive Council and the High Court officers who were regularly elected at the meeting of the High Court of the Society held in the year 1927 or regularly appointed in accordance with the by-laws of the Society since the date of the said meeting, and who, at the date of the coming into force of this Act, were acting as members of the Executive Council and as High Court officers, respectively, shall be deemed to have had, and to continue to have until the date of a meeting of the High Court to be held in the year 1931, the same authority to act for the Society as if a meeting of the High Court of the Society had been held in the year 1929, in accordance with the by-laws of the Society, and the said Executive Council and officers had been regularly elected thereat.

When section one comes into force.

3. Section one of this Act shall not come into force until the said section has been approved by resolution adopted by the meeting of the High Court of the Society to be held in the year 1931. The said section shall come into force on the day on which it is so approved by the High Court, or on such other day as may be provided in the said resolution.

Second Session, Seventeenth Parliament, 21 George V, 1931

THE HOUSE OF COMMONS OF CANADA.

BILL 28.

An Act to amend the Bankruptcy Act (Priority of Claims).

First reading, April 17, 1931.

Mr. HACKETT.

OTTAWA
PRINTER TO THE KING'S MOST EXCELLENT MAJESTY
26083 1931

2nd Session, 17th Parliament, 21 George V, 1931

THE HOUSE OF COMMONS OF CANADA

BILL 28.

An Act to amend the Bankruptcy Act (Priority of Claims).

R.S., c. 11.

HIS Majesty, by and with the advice and consent of the Senate and House of Commons of Canada, enacts as follows:—

1. The third paragraph of subsection one of section one hundred and twenty-one of the *Bankruptcy Act*, chapter eleven of the Revised Statutes of Canada, 1927, (which relates to the priority of wages, salaries, commissions or compensation of any clerk, servant, travelling salesman, labourer or workman) is repealed, and the following is substituted therefor:—

Priority of claims for wages, salaries and commissions.

"Thirdly, all wages, salaries, commissions or compensation of any clerk, servant, travelling salesman, labourer or workman, in respect of services rendered to the bankrupt or assignor during three months before the date of receiving order or assignment: Provided that commission earned more than three months before the date of a receiving order or assignment, but not payable (by the terms of the creditor's agreement) until the shipment or delivery of the goods sold, shall be deemed to have been earned within three months of the date of the receiving order or assignment, when the said goods have been shipped or delivered within three months of the receiving order or assignment; and provided, moreover, that any advances made on account of such commission shall be deemed to have been legally paid on account thereof; and all indebtedness of the bankrupt or authorized assignor under any Workman's Compensation Act;"

Proviso.

Explanatory Note.

1. The paragraph to be repealed reads as follows:—

"Thirdly, all wages, salaries, commissions or compensation of any clerk, servant, travelling salesman, labourer or workman in respect of services rendered to the brankrupt or assignor during three months before the date of the receiving order or assignment and all indebtedness of the bankrupt or authorized assignor under any Workman's Compensation Act;"

The underlined words in the Bill show the proposed changes.

Second Session, Seventeenth Parliament, 21 George V, 1931

THE HOUSE OF COMMONS OF CANADA.

BILL 29.

An Act to amend the Royal Canadian Mounted Police Act.

First reading, April 17, 1931.

The MINISTER OF JUSTICE.

OTTAWA
F. A. ACLAND
PRINTER TO THE KING'S MOST EXCELLENT MAJESTY
23709 1931

2nd Session, 17th Parliament, 21 George V, 1931

THE HOUSE OF COMMONS OF CANADA.

BILL 29.

An Act to amend the Royal Canadian Mounted Police Act.

R.S., c. 160; 1930, c. 39.

HIS Majesty, by and with the advice and consent of the Senate and House of Commons of Canada, enacts as follows:—

Arrangements with local governments.

1. Section five of the *Royal Canadian Mounted Police Act*, chapter one hundred and sixty of the Revised Statutes of Canada, 1927, is amended by adding thereto the following subsection:—

Taking over of certain officers and men of provincial police force.

"(2) There may be included in any such arrangement provisions for the taking over by the Royal Canadian Mounted Police Force of such officers and men of any provincial police force as may be required and for the extension to such officers and men of the pension benefits provided for officers and constables of the Royal Canadian Mounted Police Force, upon such terms and conditions, including recognition of prior service, as may be approved by the Governor in Council and agreed upon between the Dominion Government and the Government of any province."

Commencement of Act.

2. This Act shall be deemed to have come into operation on the first day of April, 1928.

30.

Second Session, Seventeenth Parliament, 21 George V, 1931

THE HOUSE OF COMMONS OF CANADA.

BILL 30.

An Act respecting The St. Lawrence River Bridge Company.

First reading, April 20, 1931.

(PRIVATE BILL).

Mr. ROWE.

OTTAWA
F. A. ACLAND
PRINTER TO THE KING'S MOST EXCELLENT MAJESTY
25274 1931

2nd Session, 17th Parliament, 21 George V, 1931

THE HOUSE OF COMMONS OF CANADA.

BILL 30.

An Act respecting The St. Lawrence River Bridge Company.

Preamble. 1928, c. 65.

WHEREAS The St. Lawrence River Bridge Company has represented that it was incorporated by Act of the Parliament of Canada, chapter sixty-five of the statutes of 1928, and has prayed that an Act may be passed extending the time for the commencement and completion of its undertaking and for other purposes, and it is expedient to grant the prayer of the said petition: Therefore His Majesty, by and with the consent of the Senate and House of Commons of Canada, enacts as follows:—

1. Section thirteen of chapter sixty-five of the statutes of 1928 is repealed and the following is substituted therefor:—

Amalgamation and agreements with other companies.

"**13.** The Company may unite with any company or companies incorporated under the laws of Canada or of the State of New York or of the United States, or any state thereof, or with any public authority, body or commission constituted under the laws of Canada or of the State of New York or of the United States or any State thereof, in financing, controlling, building, working, managing, maintaining and using the said bridge, terminals and approaches, and may make agreements with any such company or companies, public authority, body, or commission respecting the financing, control, construction, maintenance, management and use of the said bridge and its appurtenances, and acquiring the approaches and lands therefor in the state of New York as well as in Canada, and may, subject to the provisions of sections one hundred and fifty-one, one hundred and fifty-two and one hundred and fifty-three of the *Railway Act*, make arrangements with any such company or companies, public authority, body or commission for conveying or leasing the said

R.S., c. 170.

bridge to such company or companies, public authority, body or commission, in whole or in part, or any rights or powers acquired by it, as also the franchise, surveys, plans, works, plant, machinery and other property to it belonging, or for an amalgamation with any such company, public authority, body or commission on such terms and conditions as are agreed upon and subject to such restrictions as the directors deem fit."

2. Section sixteen of chapter sixty-five of the statutes of 1928 is repealed and the following is substituted therefor:—

Extension of time for commencement and completion of bridge.

"**16.** If the construction of the said bridge is not commenced within two years after the Governor in Council and the competent authority representing the state of New York or the United States of America have approved of such bridging, or if the said bridge is not completed within five years after such commencement, then the powers granted by this Act shall cease and be null and vois as respects so much of the undertaking of the Company as then remains uncompleted: Provided, however, that if such approval is not obtained within six years after the passing of this Act, the powers granted for the construction of the said bridge shall cease and be null and void. Section one hundred and sixty-one of the *Railway Act*, shall not apply to the Company."

Proviso.

R.S. c. 170.

Second Session, Seventeenth Parliament, 21 George V, 1931

THE HOUSE OF COMMONS OF CANADA.

BILL 31.

An Act respecting The Burrard Inlet Tunnel and Bridge Company.

First reading, April 20, 1931.

(PRIVATE BILL.)

Mr. MUNN.

OTTAWA
F. A. ACLAND
PRINTER TO THE KING'S MOST EXCELLENT MAJESTY
26349 1931

2nd Session, 17th Parliament, 21 George V, 1931

THE HOUSE OF COMMONS OF CANADA.

BILL 31.

An Act respecting The Burrard Inlet Tunnel and Bridge Company.

Preamble.

1910, c. 74; 1913, c. 80; 1914, c. 73; 1916, c. 34; 1918, c. 61; 1920, c. 74; 1922, c. 54; 1924, c. 76.

WHEREAS The Burrard Inlet Tunnel and Bridge Company (hereinafter called "the Company") was incorporated by Act of the Parliament of Canada, chapter seventy-four of the statutes of 1910; and whereas the Company under authority contained in the said Act of the Parliament of Canada and in accordance with plans duly approved under the *Railway Act* by the Governor in Council and the Board of Railway Commissioners for Canada constructed a bridge across the Second Narrows of Burrard Inlet in the Province of British Columbia for railway, vehicular and foot traffic, and the said bridge was opened for traffic in the year 1925; and whereas the said bridge since its completion has afforded the only direct railway and road communication between the municipalities on the north and south shores of Burrard Inlet; and whereas as the result of a collision the fixed three hundred foot span of the said bridge was dislodged and thrown into Burrard Inlet and the Company is desirous of replacing a fixed three hundred foot span into the said bridge and restoring communication between the north and south shores of Burrard Inlet; and whereas by the judgment of His Majesty upon the advice of the Judicial Committee of His Privy Council the said bridge was declared to have been constructed without statutory authority, and as a result of the said judgment the Company is unable to replace the said span and to restore direct communication between the municipalities on the north and south shores of Burrard Inlet; and whereas a petition has been presented praying that power to reconstruct the said bridge may be granted to the Company and for other purposes, and it is expedient to grant the prayer of the said petition: Therefore His Majesty, by and with the advice and consent of the Senate and House of Commons of Canada, enacts as follows:—

EXPLANATORY NOTE.

8. The words first underlined in the text of the Bill replace the words "so as not to interfere with navigation," and in the second case the words underlined are substituted for the words "section fourteen of this Act." The words "and use a tunnel under the First Narrows of Burrard Inlet" in the second and third lines of the section, as enacted in chapter 76 of the Statutes of 1924, are left out.

1. Section eight of the Act to incorporate The Burrard Inlet Tunnel and Bridge Company, chapter seventy-four of the statutes of 1910, as enacted by section three of chapter seventy-six of the statutes of 1924, is repealed, and the following is substituted therefor:—

Construction of bridge.

"**8.** The Company may lay out, construct, operate, maintain and use a bridge over the Second Narrows of Burrard Inlet, for foot passengers, carriages, street railway and railway purposes, with the necessary approaches, from some convenient points on the south shore in or near the City of Vancouver to points on the opposite shore of Burrard Inlet, in accordance with plans to be approved by the Governor in Council and by the Board of Railway Commissioners under the Railway Act, and may, to connect the said bridge with the lines of the companies named in section fourteen of the Act incorporating the Company as amended by chapter seventy-six of the statutes of 1924, construct and operate one or more lines of railway not exceeding ten miles in length of the guage of four feet eight and one-half inches; and the Company may lay water mains or pipes, high tension or other electric cables, telephone or telegraph cables, gas mains or such other pipes, conduits, cables or conductors as may be convenient or necessary for the transmission of water, light, heat, power or messages across the said bridge."

R.S., c. 170.

Lines of railway.

Water mains, pipes, etc.

Power to reconstruct bridge.

2. (1) Notwithstanding anything in this or any previous Act of the Parliament of Canada, the Company may reconstruct, in accordance with plans to be approved by the Governor in Council and by the Board of Railway Commissioners under the *Railway Act*, the railroad and traffic bridge heretofore constructed by the Company across the Second Narrows of Burrard Inlet.

Water mains, pipes, etc.

(2) The Company may lay water mains or pipes, high tension or other electric cables, telephone or telegraph cables, gas mains or such other pipes, conduits, cables or conductors, as may be convenient or necessary for the transmission of water, light, heat, power or messages across the said bridge.

Declaratory.

3. Notwithstanding anything in this or any previous Act of the Parliament of Canada, it is hereby declared that the bridge heretofore constructed by the Company across the Second Narrows of Burrard Inlet shall be deemed to be a bridge constructed in accordance with the terms of the Act incorporating the Company, chapter seventy-four of the statutes of 1910, and amending Acts, and of the *Railway Act*, and shall not be construed as an interference with navigation.

Power to replace span.

4. The Company is hereby authorized to repair the said bridge by replacing therein a new three hundred foot fixed span in accordance with plans of the said bridge heretofore approved by the Governor in Council and the Board of Railway Commissioners.

R.S., c. 140 not to apply.

5. The *Navigable Waters Protection Act* shall not apply to the works heretofore constructed by the Company nor to any works to be constructed by the Company under this Act.

Second Session, Seventeenth Parliament, 21 George V, 1931

THE HOUSE OF COMMONS OF CANADA.

BILL 32.

An Act respecting The Montreal Central Terminal Company.

First reading, April 21, 1931.

(PRIVATE BILL)

MR. BELL,
(St. Antoine.)

OTTAWA
F. A. ACLAND
PRINTER TO THE KING'S MOST EXCELLENT MAJESTY
25931 1931

2nd Session, 17th Parliament, 21 George V, 1931

THE HOUSE OF COMMONS OF CANADA.

BILL 32.

An Act respecting The Montreal Central Terminal Company.

Preamble.
1890, c. 93; 1891, c. 106; 1894, c. 63; 1897, c. 67; 1905, c. 127; 1909, c. 109; 1912, c. 120; 1912, c. 121; 1917, c. 56.

WHEREAS The Montreal Central Terminal Company has by its petition represented that it is desirous of obtaining an extension of time for commencement of construction and for completion of the works of the Company and for other purposes, and it is expedient to grant the prayer of the said petition: Therefore His Majesty, by and with the advice and consent of the Senate and House of Commons of Canada, enacts as follows:—

Extension of time for construction and completion.

1. The Montreal Central Terminal Company, hereinafter called "the Company", may, within two years after the passing of this Act, commence the construction of the works mentioned in section two of chapter one hundred and nine of the statutes of 1909, and expend fifteen per cent of the amount of its capital stock thereon, including amount heretofore expended, and may within five years after the passing of this Act, complete the works mentioned in section two of the said chapter, and if, within the said periods respectively, such commencement and such expenditure are not so made, or any of the said works are not completed and put in operation, the powers of construction conferred upon the Company by Parliament shall cease and be null and void, as respects so much of the said works as then remains uncompleted.

2. Section four of chapter one hundred and nine of the statutes of 1909 is repealed and the following is substituted therefor:—

Stations.

"**4.** The Company may construct, own, maintain, and operate one or more freight and passenger stations, elevators, warehouses and general freight and passenger terminal facilities in and about the city of Montreal; and may

Branches and Sidings.

construct, own and operate such branches and sidings as may be necessary to connect the same with the Company's lines; and may also construct, maintain, own and operate

one or more hotels, parks and places of amusement along its lines; but no park or place of amusement shall be located or constructed within the city of Montreal without the consent of the council of the city of Montreal, or elsewhere without the consent of the municipality in which such park or place of amusement is situated. The Company shall have power to operate its lines of railway by electricity or any power, but not by steam, that may be approved by the Board of Railway Commissioners for Canada."

Other powers not affected.

3. The provisions of this Act are not to be construed as limiting or excluding the other powers now possessed by the Company under the various Acts concerning it, subject, however, to the same limitations and restrictions under which they were granted.

Second Session, Seventeenth Parliament, 21 George V, 1931

THE HOUSE OF COMMONS OF CANADA.

BILL 33.

An Act to amend the Companies Act (Auditors).

First reading, April 21, 1931.

MR. HACKETT.

OTTAWA
F. A. ACLAND
PRINTER TO THE KING'S MOST EXCELLENT MAJESTY
26305 1931

2nd Session, 17th Parliament, 21 George V, 1931

THE HOUSE OF COMMONS OF CANADA

BILL 33.

An Act to amend the Companies Act (Auditors).

R.S., c. 27; 1930, c. 9.

HIS Majesty, by and with the advice and consent of the Senate and House of Commons of Canada, enacts as follows:—

1. Subsection three of section one hundred and twenty-three of the *Companies Act*, chapter twenty-seven of the Revised Statutes of Canada, 1927, as enacted by section thirty-five of chapter nine of the Statutes of 1930, is repealed and the following is substituted therefor:—

Auditors not to be directors or officers.

"(3) Neither the auditor of any company nor any partner nor associate in any accounting or auditing company or business with the said auditor shall be capable of being appointed a director or officer of the company; Provided, however, that this restriction shall not apply in the case of any company which prohibits any invitation to the public to subscribe for any shares, debentures or debenture stock of the company nor to any company the shares of which are not offered for public subscription."

Exception.

EXPLANATORY NOTE.

(3) The underlined words are added to the existing subsection.

Second Session, Seventeenth Parliament, 21 George V, 1931

THE HOUSE OF COMMONS OF CANADA.

BILL 34.

An Act to amend the Criminal Code (Trade Marks).

First reading, April 21, 1931.

Mr. GEARY.

OTTAWA
F. A. ACLAND
PRINTER TO THE KING'S MOST EXCELLENT MAJESTY
26345 1931

2nd Session, 17th Parliament, 21 George V, 1931

THE HOUSE OF COMMONS OF CANADA.

BILL 34.

An Act to amend the Criminal Code (Trade Marks).

R.S., c. 36.

HIS Majesty, by and with the advice and consent of the Senate and House of Commons of Canada, enacts as follows:—

1. Section four hundred and eighty-six of the *Criminal Code*, chapter thirty-six of the Revised Statutes of Canada, 1927, is repealed and the following is substituted therefor:—

Forgery.

"**486.** (1) Every one is deemed to forge a trade mark who either

Simulating trade mark.

(a) without the assent of the proprietor of the trade mark makes or reproduces in any manner that trade mark or a mark so nearly resembling it as to be calculated to deceive; or

Falsifying trade mark.

(b) falsifies any genuine trade mark, whether by alteration, addition, effacement or otherwise.

Forged trade mark.

(2) Any trade mark or mark so made, or reproduced, or falsified is, in this Part, referred to as a forged trade mark."

2. Section four hundred and eighty-eight of the said Act is repealed and the following is substituted therefor:—

Forging, etc., trade marks.

"**488.** (1) Every one is guilty of an indictable offence who, with intent to defraud,—

(a) forges any trade mark; or,

(b) knowingly and without the assent of the proprietor of the trade mark applies to any goods any trade mark, or any mark so nearly resembling a trade mark as to be calculated to deceive; or

(c) makes any die, block, machine or other instrument, for the purpose of forging, or being used for forging, a trade mark; or

(d) applies any false trade description to goods; or,

(e) disposes of, or has in his possession any forged trade mark, or any die, block machine, or other instrument, for the purpose of forging a trade mark; or

Explanatory Notes.

The object of this Bill is to cover omissions in the present wording of the relative sections in the Criminal Code relating generally to forgery of trade marks, labels, etc. Prosecutions under the existing legislation have disclosed loopholes rendering it possible, for example, for an accused person found in possession of forged trade marks and of the goods to which these are applied and actually dealing or trading in the latter, to escape conviction unless the prosecution is able to prove that the accused himself forged the trade mark or applied the forged trade mark to the goods, or caused either of these things.

1. These amendments are intended to clarify the definition of what constitutes forging a trade mark which at present is limited to "making" without the assent of the owner or "falsifying" by application, etc.

Paragraph *(a)* of subsection one of section four hundred and eighty-six is amended by inserting after the word "makes" in the second line thereof the underlined words "or reproduces in any manner".

Subsection two of the said section is amended by inserting after the words "so made" in the first line thereof the underlined words "or reproduced".

2. Paragraph *(b)* of subsection one of section four hundred and eighty-eight of the said Act is amended by striking out the word "falsely" and substituting therefor the underlined words "knowingly and without the assent of the proprietor."

The existing paragraph makes it an offence to "falsely apply to any goods any trade mark", etc. The amendment is intended to clarify the clause and make it clear that the gist of the offence is to apply a trade mark "knowingly and without the assent of the proprietor".

Paragraph *(e)* of the said subsection is amended by inserting after the words "in his possession", in the first line thereof the underlined words "any forged trade mark or".

This amendment is intended to meet the case above mentioned of a person having in his possession or disposing of forged trade marks within the meaning of the definition of section four hundred and eighty-six. Even with this amendment it will still be necessary for the prosecution to prove the fraudulent intent.

(*f*) causes or is knowingly a party to any of such things.

Burden of proof.

(2) On any prosecution under this section, the burden of proof of the assent of the proprietor shall lie on the defendant."

3. Section four hundred and eighty-nine of the said Act is amended by striking out the first seven lines thereof and substituting therefor the following:—

Selling goods falsely marked.

"**489.** Every one is guilty of an indictable offence who sells or exposes, or has in his possession for sale, or any purpose of trade or manufacture, any forged trade mark or any goods, coverings, labels, or things to which any forged trade mark is applied, or to which any trade mark or false trade description or mark so nearly resembling a trademark as to be calculated to deceive, is knowingly and without the assent of the proprietor of the trade mark, applied, as the case may be, or who causes or is knowingly a party to any such thing, unless he proves"

Paragraph *(f)* is repealed and reenacted.

The present paragraph *(f)* reads "causes any of such things to be done", which words might not apply, for instance, to possession of forged trade mark under the preceding amendment.

Subsection two of the said section is amended by striking out the words "for forging a trade mark" in the first line thereof and substituting therefor the underlined words "under this section".

The present wording of this subsection is—"On any prosecution for forging a trade mark the burden of proof of the assent of the proprietor shall lie on the defendant." The proposed amendment widens the application of this subsection to cover in addition, the other offences in the preceding subsection. The amendment still leaves on the prosecution the burden of proof of intent to defraud.

3. The section to be amended reads as follows:—

"**489.** Every one is guilty of an indictable offence who sells or exposes, or has in his possession, for sale, or any purpose of trade or manufacture, any goods or things to which any forged trade mark or false description is applied, or to which any trade mark, or mark so nearly resembling a trade mark as to be calculated to deceive, is falsely applied, as the case may be, unless he proves

(a) that having taken all reasonable precaution against committing such an offence he had, at the time of the commission of the alleged offence, no reason to suspect the genuineness of the trade mark, mark or trade description; and

(b) that on demand made by or on behalf of the prosecutor he gave all the information in his power with respect to the persons from whom he obtained such goods or things; and

(c) that otherwise he had acted innocently."

The proposed amendment widen this to include having in possession for sale, etc., any forged trade marks, coverings or labels. The word "covering" is defined in the definition clauses of the Act to include wrappers, containers, etc. The remaining amendments include substitution for the word "falsely" the same words as are proposed to be substituted for this word in section four hundred and eighty-eight, and the addition of the words making liable a person who causes or is knowingly a party to the offences described in this section. Under the present section without the proposed amendments a person, for instance, having in his possession forged labels and also packages to which the labels are to be applied, but without the labels being actually applied to the packages at the time of arrest, can escape conviction.

The distinction between section four hundred and eighty-eight and four hundred and eighty-nine is that under section four hundred and eighty-eight a person must commit the offence "with intent to defraud", whereas under section four hundred and eighty-nine he must be proved to have sold, or to have exposed, or have in possession for sale, but no intent need be proven. It is important that both sections be amended as indicated as, for instance, a Corporation cannot have an intent to defraud and, therefore, could not be prosecuted under section four hundred and eighty-eight for having forged labels in its possession.

Second Session, Seventeenth Parliament, 21 George V, 1931

THE HOUSE OF COMMONS OF CANADA.

BILL 35.

Ministers of the Crown (re-election)

An Act to remove the necessity of the re-election of Members of the House of Commons of Canada on acceptance of office.

First reading, April 23, 1931.

Mr. JACOBS.

OTTAWA
F. A. ACLAND
PRINTER TO THE KING'S MOST EXCELLENT MAJESTY
26611 1931

2nd Session, 17th Parliament, 21 George V, 1931

THE HOUSE OF COMMONS OF CANADA.

BILL 35.

An Act to remove the necessity of the re-election of Members of the House of Commons of Canada on acceptance of office.

R.S., c. 147.

HIS Majesty, by and with the advice and consent of the Senate and House of Commons of Canada, enacts as follows:—

Seat of Member not vacated by accepting office of profit.

1. Sections thirteen and fourteen of the *Senate and House of Commons Act*, chapter one hundred and forty-seven of the Revised Statutes of Canada, 1927, are repealed, and the following are substituted therefor:—

"**13.** Notwithstanding anything in this Act contained, a member of the House of Commons shall not vacate his seat by reason only of his acceptance of an office of profit under the Crown, if that office is an office the holder of which is capable of being elected to, or sitting or voting in, the House of Commons.

Members of Privy Council also excepted.

"**14.** Nothing in this Act contained shall render ineligible, as aforesaid, any person, member of the King's Privy Council, holding the recognized position of First Minister, President of the King's Privy Council for Canada, Minister of Finance, Minister of Justice, Minister of National Defence, Secretary of State, Minister of the Interior, Minister of Railways and Canals, Minister of Public Works, Postmaster General, Minister of Agriculture, Minister of National Revenue, Minister of Marine, Minister of Fisheries, Minister of Trade and Commerce, Minister of Labour, Secretary of State for External Affairs, Minister of Immigration and Colonization, Minister of Pensions and National Health or Solicitor General, or any office which is hereafter created, to be held by a member of the King's Privy Council for Canada and entitling him to be a Minister of the Crown, or shall disqualify any such person to sit or vote in the House of Commons, if he is elected while he holds such office, or is a member of the House of Commons at the date of his nomination by the Crown for such office, and is not otherwise disqualified."

Explanatory Note.

The British Parliament has passed an Act for the same purpose as this proposed legislation, in the Imperial Statutes, 16–17 George V, chapter 19, assented to 15th July, 1926. In New South Wales in 1906, the rule of non re-election was adopted, and it has always been in force in South Australia and New Zealand. It is now in force in Tasmania and in Queensland. In the Cape, the Transvaal, the Orange River Colony and Natal it was never introduced, and the Union of South Africa, like the Commonwealth of Australia follows the same model.

Second Session, Seventeenth Parliament, 21 George V, 1931

THE HOUSE OF COMMONS OF CANADA.

BILL 36.

An Act respecting Northern Alberta Railways Company.

First reading, April 23, 1931.

THE MINISTER OF RAILWAYS AND CANALS.

OTTAWA
F. A. ACLAND
PRINTER TO THE KING'S MOST EXCELLENT MAJESTY
1931

23348

2nd Session, 17th Parliament, 21 George V, 1931

THE HOUSE OF COMMONS OF CANADA.

BILL 36.

An Act respecting Northern Alberta Railways Company.

1929, c. 48.

HIS MAJESTY, by and with the advice and consent of the Senate and House of Commons of Canada, enacts as follows:—

Power to construct and complete lines described in schedule.

1. Northern Alberta Railways Company may within two years from the date of the passing of this Act commence to construct lines of railway described in the Schedule hereto, which lines were authorized by section eleven of Schedule "B" to the *Northern Alberta Railways Act, 1929*, and may within five years from the said date complete the said lines, and if within the said periods respectively the said lines are not commenced or are not completed and put in operation the powers of construction conferred upon the Company by Parliament shall cease and be null and void as respects so much of the said lines of railway as shall then remain uncompleted.

SCHEDULE

(1) An extension of the main line of The Edmonton, Dunvegan and British Columbia Railway Company from Spirit River in the province of Alberta, by the most feasible route, and in a generally westerly direction a distance of one hundred and two miles, more or less, to a point in townships seventy-eight or seventy-nine, range eighteen, west of the sixth meridian in the province of British Columbia.

(2) A branch line of the Central Canada Railway from a point at or near Grimshaw in a generally northerly direction to a point that will when surveyed approximate to a point in township one hundred and eleven, range nineteen or twenty, west of the fifth principal meridian, thence in a generally northerly direction approximately parallel to the Hay river to the northern boundary of the province of Alberta.

EXPLANATORY NOTE

The object of this Bill is to extend the time for two years for the commencement and completion of the lines of railway referred to in the Schedule. The construction of these lines was authorized by the Northern Alberta Railways Act, 1929, being chapter 48 of the statutes of Canada, 1929.

Second Session, Seventeenth Parliament, 21 George V, 1931

THE HOUSE OF COMMONS OF CANADA.

BILL 37.

An Act to amend the Government Employees Compensation Act.

First reading, April 23, 1931.

THE MINISTER OF RAILWAYS AND CANALS.

OTTAWA
F. A. ACLAND
PRINTER TO THE KING'S MOST EXCELLENT MAJESTY
23346 1931

2nd Session, 17th Parliament, 21 George V, 1931

THE HOUSE OF COMMONS OF CANADA

BILL 37.

An Act to amend the Government Employees Compensation Act.

R.S., c. 30.

HIS MAJESTY, by and with the advice and consent of the Senate and House of Commons of Canada, enacts as follows:—

1. Section two of the *Government Employees Compensation Act*, chapter thirty of the Revised Statutes of Canada, 1927, is repealed and the following is substituted therefor:—

Definitions.

"Employee".

"**2.** In this Act unless the context otherwise requires, *(a)* 'employee' means and includes persons in the service of His Majesty who are paid a direct wage or salary by or on behalf of His Majesty, but does not include persons who are permanent members of the military, naval or air forces of Canada, and persons who are caused personal injury by or whose death results from accident while performing duties or services by virtue of being appointed, certificated or licensed by His Majesty or by a Minister of the Crown acting in any capacity other than on behalf of His Majesty, and which persons for such duties or services are remunerated otherwise than by a direct wage or salary by or on behalf of His Majesty;

"Compensation".

(b) 'compensation' shall be deemed to include medical and hospital expenses and any other benefits, expenses or allowances that are authorized by the Workmen's Compensation Act of the province in which the accident occured."

2. Subsection one of section three of the said Act is repealed and the following is substituted therefor:—

Compensation to be same as under law of province where accident occurs.

"**3.** (1) An employee who is caused personal injury by accident arising out of and in the course of his employment, and the dependents of an employee whose death results from such an accident, shall, notwithstanding the nature or class of such employment, be entitled to receive compensation at the same rate as is provided for an employee, or a dependent of a deceased employee, of a person other than

EXPLANATORY NOTES

1. Section 2 (a). The object of this amendment is to define the term "employee" so as to exclude permanent members of the military, naval or air forces of Canada, for whom provisions are made under other statutes, and to exclude persons not actually in the service of His Majesty.

Section 2 (b). The object of this amendment is to extend the interpretation of the term "compensation" so as to include any benefits provided for under the provincial Compensation Acts.

The present Section 2 reads as follows:—

"2. For the purpose of this Act the term 'compensation' shall be deemed to include medical and hospital expenses."

2.—Section 3 (1). The object of this amendment is to make the benefits of the Act applicable to all employees in the service of His Majesty, regardless of the Department or Branch for which the employee is working, or the nature or class of such work.

The proviso to this section limits the application of the Act to employees on the Government railways to the extent that the provincial Act of the province in which the accident occurred applies to persons employed by railway companies.

The present section 3, subsection (1), reads as follows:—

"3. An employee in the service of His Majesty who is injured, and the dependents of any such employee who is killed, shall be entitled to the same compensation as the employee, or as the dependent of a deceased employee, of a person other than His Majesty would, under similar circumstances, be entitled to receive under the law of the province in which the accident occurred, and the liability for and the amount of such compensation shall be determined in the same manner and by the same board, officers or authority as that established by the law of the province for determining compensation in similar cases, or by such other board, officers or authority or by such court as the Governor in Council shall from time to time direct."

His Majesty under the law of the province in which the accident occurred for determining compensation in cases of enployees other than of His Majesty, and the liability for and the amount of such compensation shall be determined subject to the above provisions under such law, and in the same manner and by the same board, officers or authority as that established by such law for determining compensation in cases of employees other than of His Majesty, or by such other board, officers or authority, or by such court as the Governor in Council shall from time to time direct:

Proviso. Provided that the benefits of this Act shall apply to an employee on the Government railways who is caused personal injury by accident arising out of and in the course of his employment, and the dependents of such an employee whose death results from such an accident, to such an extent and such an extent only as the Workmen's Compensation Act of the province in which the accident occurred would apply to a person in the employ of a railway company or the dependents of such persons under like circumstances."

Second Session, Seventeenth Parliament, 21 George V, 1931

THE HOUSE OF COMMONS OF CANADA.

BILL 38.

An Act to amend the Salaries Act.

First reading, April 23, 1931.

THE MINISTER OF JUSTICE.

OTTAWA
F. A. ACLAND
PRINTER TO THE KING'S MOST EXCELLENT MAJESTY
23474 1931

2nd Session, 17th Parliament, 21 Geo. V, 1931.

THE HOUSE OF COMMONS OF CANADA.

BILL 38.

An Act to amend the Salaries Act.

R.S., c. 182.

HIS Majesty, by and with the advice and consent of the Senate and House of Commons of Canada, enacts as follows:—

1. Section five of the *Salaries Act*, chapter one hundred and eighty-two of the Revised Statutes of Canada, 1927, is repealed, and the following is substituted therefor:—

Salary of Solicitor General.

"**5.** The salary of the Solicitor General of Canada shall be ten thousand dollars per annum."

Seat not vacated.

2. The acceptance by the Solicitor General of Canada of the increased salary authorized by this Act shall not operate to vacate his seat in the House of Commons.

Commencement of Act.

3. This Act shall be deemed to have come into operation on the seventh day of August, 1930.

Second Session, Seventeenth Parliament, 21 George V, 1931

THE HOUSE OF COMMONS OF CANADA.

BILL 39.

An Act to amend the Customs Act.

First reading, April 28, 1931.

The Minister of National Revenue.

OTTAWA
F. A. ACLAND
PRINTER TO THE KING'S MOST EXCELLENT MAJESTY
23756 1931

2nd Session, 17th Parliament, 21 George V, 1931

THE HOUSE OF COMMONS OF CANADA.

BILL 39.

An Act to amend the Customs Act.

R.S., c. 42; 1930 (2nd Sess)., c. 2.

HIS Majesty, by and with the advice and consent of the Senate and House of Commons of Canada, enacts as follows:—

1. Subsection six of section thirty-eight of the *Customs Act*, chapter forty-two of the Revised Statutes of Canada, 1927, as enacted by section three of chapter two of the statutes of 1930, second session, is repealed, and the following is substituted therefor:—

Discounts.

"(6) In estimating the value for duty no discount or deduction shall be allowed which is not shown and allowed and deducted on invoices covering sales for home consumption in the country of export in the usual and ordinary course of trade."

2. Subsection three of section ninety-six of the said Act is amended by adding thereto the following paragraph:—

Proviso.

"This subsection, however, shall not apply to goods intended to be landed in Canada after being forwarded to another Canadian port if the same have been purchased by and consigned to persons legally entitled to import the same."

Out of Canada.

3. Subsection two of section one hundred and thirty-two of the said Act is amended by adding at the end thereof the following words:—

"and at any place before a Canadian Government Trade Commissioner."

4. The said Act is amended by inserting the following section immediately after section one hundred and thirty-four thereof:—

Power to examine on oath.

"**134**A. (1) The commissioner of customs, assistant commissioner of customs, any inspector of customs ports, any collector of customs, and the chief of the preventive service

EXPLANATORY NOTES.

1. The subsection to be repealed now reads as follows:—

"(6) In estimating the value for duty no discount or deduction shall be allowed which is not shown and allowed on invoices covering sales for home consumption in the country of export in the usual and ordinary course of trade."

The words underlined in the new subsection are added. This is the only change. The object of the proposed amendment is to make it clear that to be allowed a discount must be one which in the home market is actually deducted in the invoice record of the transaction.

2. Subsection three of section ninety-six reads as follows:—

"3. The provisions of this section as to wines, spirituous and fermented malt liquors shall also apply to wines, spirituous and fermented malt liquors reported outward at Customs by sea as cargo and other than ship's stores, whether landed or intended to be landed in Canada or not, the bond in such case to be given by the owner, shipper or consignor of the goods; and no collector or officer shall grant a clearance to a vessel with wines, spirituous or fermented malt liquors as cargo until such bond has been given."

Under the strict construction of subsection three a bond of a Guarantee Company is required on clearance of a vessel from say Halifax, N.S., to Saint John, N.B., with liquors on board consigned from abroad to persons legally entitled to import into New Brunswick, such as the Liquor Control Board, the vessel having on its voyage from abroad first called at Halifax. This is not desired.

3. Section 132 now reads as follows:—

"**132.** Every oath required under the provisions of this Act connected with the entry of goods may be made in Canada before the collector, sub-collector, surveyor or chief clerk at the port where the goods are entered, or, if the person making such oath is not resident there, then before the collector or proper officer of some other port.

2. When such oath is required to be made out of the limits of Canada, it may be made at any place within Great Britain, or at any place in His Majesty's possessions abroad, before the collector or before the mayor or other chief municipal officer of the place where the goods are shipped, or before a notary public, and, at any other place, before a British consul, or if there is no British consul, then before a foreign consul at such place."

The addition of the words suggested will operate as a further convenience to foreign exporters.

4. Under the provisions of the Customs Act as at present existing no officer of Customs is empowered to examine persons upon oath in the course of any inquiry or investigation. Such inquiries are of frequent occurrence and often take place at points where commissioners or other persons authorized to administer oaths are not available. The suggested provisions are adopted from the Post Office Act, R.S., Chap. 161, s. 15, and the Inquiries Act, R.S., Chap. 99, ss. 8 and 10.

and any divisional chief of the preventive service, and any other officer designated by the Minister, may conduct any inquiry or investigation in matters relating to the Customs, and may summon before him any person and may examine him and require him to give evidence orally or in writing, on oath or on solemn affirmation if he is entitled to affirm in civil matters, or by statutory declaration, on any matter pertinent to such inquiry or investigation, and any person thus authorized to conduct an enquiry or investigation may administer such oath or affirmation.

May issue subpoena or summons.

(2) Any officer authorized to conduct any such inquiry or investigation may for the purpose thereof issue a subpoena or other request or summons, requiring and commanding any person therein named to appear at the time and place mentioned therein, and then and there to testify to all matters within his knowledge relative to the subject matter of such investigation, and to bring with him and produce any document, book, or paper, which he has in his possession or under his control relative to any such matter as aforesaid; and any such person may be summoned from any part of Canada by virtue of such subpoena, request or summons.

Expenses.

(3) Reasonable travelling expenses shall be paid to any person so summoned at the time of service of the subpoena, request or summons.

(4) Every person who—

Witness failing to attend, etc.

(a) being required to attend in the manner in this section provided, fails, without valid excuse, to attend accordingly; or

(b) being commanded to produce any document, book or paper, in his possession or under his control, fails to produce the same; or

(c) refuses to be sworn or to affirm, or to declare, as the case may be; or

(d) refuses to answer any proper question put to him by such officer;

shall, on summary conviction before any police or stipendiary magistrate, or judge of a superior or county court, having jurisdiction in the county or district in which such person resides, or in which the place is at which he was so required to attend, be liable to a penalty not exceeding four hundred dollars."

5. Subsection seven of section one hundred and fifty-one of the said Act, as enacted by section one of chapter sixteen of the statutes of 1928, is repealed, and the following is substituted therefor:—

Territorial waters defined.

"(7) For the purposes of this section and section two hundred and seven of this Act, 'Territorial waters of Canada' shall mean the waters forming part of the territory of the Dominion of Canada and the waters adjacent to the Dominion within three marine miles thereof, in the case of

5. The underlined words in the text of the Bill show the proposed amendment. There is no other change.

Since this law was enacted, many Canadian owned vessels under ten tons not required to be registered are engaging in the liquor traffic and hovering outside the three mile limit on the Atlantic coast with liquor cargoes to be smuggled into Canada. It is desired to have the same authority over these as has been given with regard to vessels registered in Canada.

any vessel, and within twelve marine miles thereof, in the case of any vessel registered in Canada, or any other vessel which is owned by any person domiciled in Canada."

6. Section one hundred and fifty-two of the said Act is repealed, and the following is substituted therefor:—

Arrest without warrant for indictable offence.

"**152.** (1) Any officer or person having the powers of a customs officer may arrest without warrant any one found committing or who is suspected of having committed any offence declared by this Act to be an indictable offence, or declared by the *Criminal Code* to be an indictable offence whenever such offence arises out of or is connected with the administration of the *Customs Act*.

R.S., c. 36.

Justification of officer making arrest.

(2) Every officer and every person having the powers of a customs officer who on reasonable and probable grounds believes that an offence declared by this Act to be an indictable offence, or declared by the *Criminal Code* to be an indictable offence whenever such offence arises out of or is connected with the administration of the *Customs Act*, has been committed, whether it has been committed or not, and who on reasonable and probable grounds believes that any person has committed that offence is justified in arresting such person without warrant."

Assistant Commissioner may report.

7. Section one hundred and seventy-three of the said Act is amended by adding after the word "Customs" in the third line thereof the words "or Assistant Commissioner of Customs".

8. Subsection two of section one hundred and seventy-four of the said Act is repealed, and the following is substituted therefor:—

Minister may delegate powers.

"(2) The Minister may by regulation authorize the Commissioner of Customs or the Assistant Commissioner of Customs to exercise the powers conferred by this section upon the Minister."

9. The last paragraph of section one hundred and eighty-four of the said Act is repealed and the following is substituted therefor:—

Further penalty if value two hundred dollars or over.

"*(b)* If the value for duty of the goods is two hundred dollars or over, be guilty of an indictable offence and liable on conviction to a penalty not exceeding one thousand dollars and not less than two hundred dollars, or to imprisonment for a term not exceeding four years and not less than one year, or to both fine and imprisonment."

6. The words underlined in the text of the Bill show the proposed amendment. There is no other change.

Many officers of the Customs Preventive Service operate in outlying districts where there are no police officers or constables available to place under arrest parties guilty of indictable offences under the Criminal Code affecting such Customs officers in the performance of their duties in the administration of the Customs Act, as for instance, assault of a public officer—see Sec. 296 of the Criminal Code. It is desirable that such officers be given authority to arrest without warrant in such cases.

7. Section **173** of the said Act now reads as follows:—

"**173.** After the expiration of the said thirty days, or sooner, if the person so called upon to furnish evidence so desires, the Commissioner of Customs may consider and weigh the circumstances of the case, and report his opinion and recommendation thereon to the Minister."

In order to avoid delays from time to time in decisions on Customs seizures it is considered desirable to have the Assistant Commissioner of Customs given the authority conferred by this section upon the Commissioner of Customs.

8. The words underlined in the text of the Bill show the proposed amendment. There is no other change.

The change is proposed in order to obviate delay in rendering of decisions on seizures during the temporary absence of the Minister and Commissioner of Customs.

9. The paragraph to be repealed reads as follows:—

"(*b*) If the value for duty of the goods is two hundred dollars or over, be guilty of an indictable offence and liable on conviction to a fine of five hundred dollars, or to imprisonment for a term not exceeding seven years and not less than one year, or to both fine and imprisonment."

The words underlined in the amendment indicate the proposed change.

Under the provisions of the Criminal Code, Sec. 932, every one indicted for an offence for which he may be sentenced to imprisonment for more than five years, is entitled to challenge twelve jurors peremptorily, whereas if the maximum term of imprisonment is less than five years, he is entitled to challenge only four jurors peremptorily. No penalty of imprisonment for over four years has ever been imposed, and by reducing the maximum to four years it will be made more difficult for a defendant by exercising his right of peremptory challenge to select a jury to his liking.

The money penalty should range from a maximum of $1,000 to a minimum of $200, the latter being the maximum for the lesser offence where value is under $200.

10. Paragraph *(b)* of subsection two of section one hundred and eighty-nine of the said Act is repealed, and the following is substituted therefor:—

Further penalty if value two hundred dollars or over.

"*(b)* If the value for duty of the goods is two hundred dollars or over, be guilty of an indictable offence and liable on conviction to a penalty not exceeding one thousand dollars and not less than two hundred dollars, or to imprisonment for a term not exceeding four years and not less than one year, or to both fine and imprisonment."

Further penalty if value two hundred dollars or over.

11. Paragraph *(b)* of subsection two of section one hundred and ninety of the said Act is repealed, and the following is substituted therefor:—

"*(b)* If the value for duty of the goods is two hundred dollars or over, be guilty of an indictable offence and liable on conviction to a penalty not exceeding one thousand dollars and not less than two hundred dollars, or to imprisonment for a term not exceeding four years, and not less than one year, or to both fine and imprisonment."

Further penalty if value two hundred dollars or over.

12. Paragraph *(b)* of subsection two of section one hundred and ninety-two of the said Act is repealed, and the following is substituted therefor:—

"*(b)* If the value for duty of the goods is two hundred dollars or over, be guilty of an indictable offence and liable on conviction to a penalty not exceeding one thousand dollars and not less than two hundred dollars, or to imprisonment for a term not exceeding four years and not less than one year, or to both fine and imprisonment."

13. Section one hundred and ninety-three of the said Act is repealed, and the following is substituted therefor:—

Vessels used in conveying liable to forfeiture.

"**193.** (1) All vessels, with the guns, tackle, apparel and furniture thereof, and all vehicles, harness, tackle, horses and cattle made use of in the importation or unshipping or landing or removal or subsequent transportation of any goods liable to forfeiture under this Act, shall be seized and forfeited.

Assisting in landing, etc., such goods.

(2) Every person who assists or is otherwise concerned in the importing, unshipping, landing or removing or subsequent transporting, or in the harbouring of such goods, or into whose control or possession the same come without lawful excuse, the proof of which shall be on the person

Penalty.

accused, shall, in addition to any other penalty, forfeit a sum equal to the value of such goods, which may be recovered in any court of competent jurisdiction, and, where the

10. Paragraph *(b)* of subsection two of section one hundred and eighty-nine to be repealed reads as follows:—

"*(b)* If the value for duty of the goods is two hundred dollars or over be guilty of an indictable offence and liable on conviction to a fine of five hundred dollars or to imprisonment for a term not exceeding seven years and not less than one year, or to both fine and imprisonment."

The words underlined in the amendment indicate the proposed change.

The reason for the change is the same as for the proposed amendment to section 184.

11. Paragraph *(b)* of subsection two of section one hundred and ninety to be repealed reads as follows:—

"*(b)* If the value for duty of the goods is two hundred dollars or over, be guilty of an indictable offence and liable on conviction to a fine of five hundred dollars or to imprisonment for a term not exceeding seven years and not less than one year, or to both fine and imprisonment."

The words underlined in the amendment indicate the proposed change.

The reason for the change is the same as for the proposed amendment to section 184.

12. Paragraph *(b)* of subsection two of section one hundred and ninety-two to be repealed reads as follows:—

"*(b)* If the value for duty of the goods is two hundred dollars or over, be guilty of an indictable offence and liable on conviction to a fine of five hundred dollars or to imprisonment for a term not exceeding seven years and not less than one year, or to both fine and imprisonment."

The words underlined in the amendment indicate the proposed change.

The reason for the change is the same as for the proposed amendment to section 184.

13. Section one hundred and ninety-three to be repealed reads as follows:—

"**193.** All vessels, with the guns, tackle, apparel and furniture thereof, and all vehicles, harness, tackle, horses and cattle made use of in the importation or unshipping or landing or removal of any goods liable to forfeiture under this Act, shall be seized and forfeited.

2. Every person who assists or is otherwise concerned in the importing, unshipping, landing or removing, or in the harbouring of such goods, or into whose control or possession the same come without lawful excuse, the proof of which shall be on the person accused, shall in addition to any other penalty forfeit a sum equal to the value of such goods, which may be recovered in any court of competent jurisdiction, and where the value for duty of such goods is under two hundred dollars, shall further be liable on summary conviction before two justices of the peace to a penalty not exceeding two hundred dollars and not less than fifty dollars, or to imprisonment for a term not exceeding one month, or to both fine and imprisonment.

Where value under two hundred dollars.

value for duty of such goods is under two hundred dollars, shall further be liable on summary conviction before two justices of the peace to a penalty not exceeding two hundred dollars and not less than fifty dollars, or to imprisonment for a term not exceeding one month, or to both fine and imprisonment.

Further penalty where value two hundred dollars or over.

(3) Where the value for duty of the goods so imported, unshipped, landed, removed, subsequently transported, or harboured or found, is two hundred dollars or over, such person shall be guilty of an indictable offence and liable on conviction, in addition to other penalties to which he is subject for any such offence, to a penalty not exceeding one thousand dollars and not less than two hundred dollars, or to imprisonment for a term not exceeding four years and not less than one year, or to both fine and imprisonment."

14. Paragraph *(b)* of section one hundred and ninety-four of the said Act is repealed, and the following is substituted therefor:—

Further penalty where value two hundred dollars or over.

"*(b)* If the value for duty of the goods is two hundred dollars or over, be guilty of an indictable offence and liable on conviction to a penalty not exceeding one thousand dollars and not less than two hundred dollars, for every person so procured, hired or induced, or to imprisonment for a term nor exceeding four years and not less than one year, or to both fine and imprisonment."

15. Paragraph *(a)* of subsection one of section two hundred and three of the said Act is repealed, and the following is substituted therefor:—

Smuggling.

"*(a)* smuggles or clandestinely introduces into Canada any goods subject to duty under the value for duty of two hundred dollars."

16. Subsection three of section two hundred and three of the said Act is repealed, and the following is substituted therefor:—

"(3) Every one who smuggles or clandestinely introduces into Canada any goods subject to duty of the value for duty of two hundred dollars or over is guilty of an indicatble offence and liable on conviction, in addition to any other penalty to which he is subject for any such offence, to a penalty not exceeding one thousand dollars and not less than two hundred dollars, or to imprisonment for a term not exceeding four years and not less than one year, or to both fine and imprisonment, and such goods if found shall be seized and forfeited without power of remission, or if

Offence.

Penalty where value two hundred dollars or over.

3. Where the value for duty of the goods so imported, unshipped, landed, removed, harboured or found, is two hundred dollars or over, such person shall be guilty of an indictable offence and liable in addition to other penalties to which he is subject for any such offence, to a fine of five hundred dollars, or to imprisonment for a term not exceeding seven years and not less than one year, or to both fine and imprisonment.

The words underlined in the amendment indicate the proposed changes.

The words "or subsequent transportation" are added after the word "removal" in the third line of subsection 1 for the reason that it has been held that the word "removal" at present in this section means a removal incident to the importation or unshipping or landing only and not a subsequent transportation as was no doubt intended.

For the same reason the words "or subsequent transporting" are added after the word "removing" in the second line of subsection 2.

The reason for the change in subsection 3 is the same as for the proposed amendment to section 184.

14. Paragraph *(b)* of section one hundred and ninety-four to be repealed reads as follows:—

"*(b)* If the value for duty of the goods is two hundred dollars or over, be guilty of an indictable offence and liable on conviction to a fine of five hundred dollars for every person so procured, hired or induced, or to imprisonment for a term not exceeding seven years and not less than one year, or to both fine and imprisonment."

The words underlined in the amendment indicate the proposed changes.

The reason for the change is the same as for the proposed amendment to section 184.

15. Paragraph *(a)* of subsection one of section two hundred and three, to be repealed, reads as follows:—

"*(a)* smuggles or clandestinely introduces into Canada any goods subject to duty under the value of two hundred dollars."

The words underlined in the amendment indicate the proposed change.

The words "for duty" are added after the word "value" in the second line thereof in order to have the section correspond with other penalty provisions throughout the Act. In 1927, when other penalty sections of the Act were changed in the same way this section was overlooked.

16. Subsection three of section two hundred and three to be repealed, reads as follows:—

"3. Every one who smuggles or clandestinely introduces into Canada any goods subject to duty of the value of two hundred dollars or over is guilty of an indictable offence and liable in addition to any other penalty to which he is subject for any such offence to imprisonment for a term not exceeding seven years and not less than one year for a first offence, and to imprisonment for a term not exceeding ten years and not less than three years for a second and each subsequent offence, and such goods if found shall be seized and forfeited without power of remission, or if not found but the value thereof has been ascertained the person so offending shall forfeit without power of remission the value thereof as ascertained."

The words underlined in the amendment indicate the proposed change.

The words "for duty" are added after the word "value" in the second line thereof for the reason stated above.

The penalties are changed for the same reason as applies to changes in section 184 above, and for the further reason that it has been found in practice that this legislation enacted in 1925, is incapable of enforcement, juries being adverse to convicting where imprisonment without the option of a fine is the only penalty provided.

The provision for a penalty for a second and each subsequent offence is omitted, because a general provision is made in section 283 for a second conviction for an indictable offence. Section 283 reads as follows:—

"**283.** Every one who is convicted of an indictable offence for any infraction of this Act committed after a previous conviction for an indictable offence, is liable to imprisonment for a term not exceeding ten years and not less than three years."

not found but the value thereof has been ascertained, the person so offending shall forfeit without power of remission the value thereof as ascertained."

17. Section two hundred and thirteen of the said Act is repealed and the following is substituted therefor:—

Persons smuggling goods in company.

"**213.** If any two or more persons in company are found together, and they or any of them have any goods liable to forfeiture under this Act, every such person having knowledge of the fact is guilty of an offence and punishable in accordance with the provisions of this Act as if the goods were found on such person."

Where goods of the value of two hundred dollars or over.

18. Subsection three of section two hundred and seventeen of the said Act is repealed, and the following is substituted therefor:—

"(3) Where the goods so harboured, kept, concealed, purchased, sold or exchanged, are of the value for duty of two hundred dollars or over, such person shall be guilty of an indictable offence and liable on conviction to a penalty not exceeding one thousand dollars and not less than two hundred dollars, or to imprisonment for a term not exceeding four years and not less than one year, or to both fine and imprisonment."

19. The said Act is amended by inserting the following section immediately after section two hundred and sixty-seven thereof:—

Officials with powers of two justices.

"**267A.** Notwithstanding anything contained herein, any offence against the provisions of this Act which is expressed to be heard and determined by way of summary conviction before two justices of the peace may be heard and determined before a police magistrate, district magistrate, chief magistrate or stipendiary magistrate, or other functionary, tribunal or person, invested by the proper legislative authority to perform acts usually required to be done by two or more justices of the peace, and acting within the local limits of his or its jurisdiction."

17. Section two hundred and thirteen to be repealed reads as follows:—

"**213.** If any two or more persons in company are found together, and they or any of them have any goods liable to forfeiture under this Act, every such person having knowledge of the fact is guilty of an indictable offence, and punishable accordingly."

The words underlined in the amendment indicate the proposed change.

Under this section a person would be guilty of an indictable offence even if the value for duty of the goods were less than two hundred dollars. This is not desirable but the person should be punishable in accordance with the provisions of section 217, which provides for a summary conviction where the goods are under the value for duty of two hundred dollars.

18. Subsection three of section two hundred and seventeen, to be repealed, reads as follows:—

"3. Where the goods so harboured, kept, concealed, purchased, sold or exchanged are of the value of two hundred dollars, or over, such person shall be guilty of an indictable offence and liable to a term of imprisonment not exceeding seven years and not less than one year for a first offence, and to a term of imprisonment not exceeding ten years and not less than three years for a second and each subsequent offence."

The words underlined in the amendment indicate the proposed changes.

The words "for duty" are added after the word "value" to make the section correspond with other penalty provisions throughout the Act. When the other sections were changed in this respect in 1927 this section was overlooked.

The changes in penalty are recommended for the same reasons as apply to section 203 above.

The provisions for a second and each subsequent offence are omitted because this is provided for in section 283 of the Act, which reads as follows: —

"**283.** Every one who is convicted of an indictable offence for any infraction of this Act committed after a previous conviction for an indictable offence, is liable to imprisonment for a term not exceeding ten years and not less than three years."

19. (Sec. 267A). Throughout the Customs Act (*see* sections 179, 184, 190, 192, 193, 194, 217, 225, 246, 257 and 258) certain prosecutions are to be brought before two justices of the peace.

Courts have decided that such prosecutions cannot be tried by a magistrate having the power of two justices of the peace.

It is desirable that such prosecutions be tried before magistrates where available, they having the greater experience.

The proposed amendment will enable a magistrate to assume the jurisdiction now possessed by two justices of the peace.

Second Session, Seventeenth Parliament, 21 George V, 1931

THE HOUSE OF COMMONS OF CANADA.

BILL 40.

An Act to amend the Judges Act.

First reading, May 1, 1931.

The MINISTER OF JUSTICE.

OTTAWA
F. A. ACLAND
PRINTER TO THE KING'S MOST EXCELLENT MAJESTY
1931

26780

2nd Session, 17th Parliament, 21 George V, 1931

THE HOUSE OF COMMONS OF CANADA.

BILL 40.

An Act to amend the Judges Act.

R.S., c. 105.

HIS MAJESTY, by and with the advice and consent of the Senate and House of Commons of Canada, enacts as follows:—

1. Section twenty-seven of the *Judges Act*, chapter one hundred and five of the Revised Statutes of Canada, 1927, is amended by adding thereto the following subsection:—

Annuity to judge appointed as Chief Commissioner or Assistant Chief Commissioner of Railway Board.

"(2) If any judge of a Superior Court of Canada or of any province of Canada is or may be, since the first day of January, 1931, appointed Chief Commissioner or Assistant Chief Commissioner of the Board of Railway Commissioners for Canada, and ceases to hold such office, His Majesty may, by letters patent under the Great Seal of Canada, grant to him an annuity equal to that, if any, which he would have received if he had continued in office as such judge, and had vacated the said office of judge on the date upon which he ceased to hold the said office of Chief Commissioner or Assistant Chief Commissioner."

EXPLANATORY NOTE

Section 27 of the Judges Act reads as follows:—

"27. If any person become entitled to a pension after the first day of July, one thousand nine hundred and twenty, under this Act, and become entitled to any salary in respect of any public office under His Majesty in respect of his Government of Canada, such salary shall be reduced by the amount of such pension."

The purpose of the subsection to be added is to preserve the right to pension of a judge who may be or has been appointed to the Board of Railway Commissioners for Canada.

Second Session, Seventeenth Parliament, 21 George V, 1931

THE HOUSE OF COMMONS OF CANADA.

BILL 41.

An Act to amend the Soldier Settlement Act.

First reading, May 1, 1931.

The MINISTER OF IMMIGRATION.

OTTAWA
F. A. ACLAND
PRINTER TO THE KING'S MOST EXCELLENT MAJESTY
25983 1931

2nd Session, 17th Parliament, 21 George V, 1931

THE HOUSE OF COMMONS OF CANADA.

BILL 41.

An Act to amend the Soldier Settlement Act.

R.S., c. 188; 1928, c. 48; 1930, c. 42.

HIS Majesty by and with the advice and consent of the Senate and House of Commons of Canada enacts as follows:—

1. Paragraph *(c)* of section two of the *Soldier Settlement Act*, chapter one hundred and eighty-eight of the Revised Statutes of Canada, 1927, is repealed and the following is substituted therefor:—

"Board."

"*(c)* "Board" means the Director of Soldier Settlement."

2. Section two of the said Act is further amended by adding thereto immediately after paragraph *(c)*, as paragraph *(cc)*, the following:—

"Commissioner of the Board."

"*(cc)* "Commissioner of the Board" means the Director of Soldier Settlement."

3. Section three of the said Act is repeaied and the following is substituted therefor:—

Appointment of Director.

"**3.** (1) The Governor in Council may appoint an officer who shall be called the Director of Soldier Settlement who shall hold office during pleasure.

Powers of Director.

(2) The Director of Soldier Settlement shall have and exercise all the powers and authority heretofore vested in the Soldier Settlement Board, and shall have and be accorded

Transportation.

the same rights or privileges as to transportation free or at reduced rates upon railways as are from time to time enjoyed by a deputy head of a department.

Salary.

(3) There shall be paid monthly to the Director of Soldier Settlement such salary and at such rate per annum as the Governor in Council shall fix and allow.

Reference to the Board deemed a reference to the Director.

(4) In this Act and in any regulations made under it, unless the context otherwise requires, any reference to the Board or to any Commissioner of the Board shall be deemed to be a reference to the Director of Soldier Settlement."

EXPLANATORY NOTES.

This Bill consists of six sections respectively dealing with the following:—

Secs. 1 and 2.....Interpretation.
Sec. 3.....Substitution of Director for Soldier Settlement Board.
Sec. 4.....Creation of Director as corporation sole for certain purposes.
Sec. 5.....Substitution of new postal provisions.
Sec. 6.....Definite discontinuance in office of Board Commissioners.

Taken seriatim the reasons for these changes are as follows:—

1. As the Bill abolishes the Soldier Settlement Board and provides for transfer of its power and authority to another person it is necessary either to amend the Act by substituting a reference to the Director of Soldier Settlement wherever the word "Board" occurs with certain exceptions or to give to the word "Board" a new meaning; there are certain sections in the Act where, in the very nature of things due to the effiux of time, reference to the Board cannot reasonably be a reference to the Director as, for instance, in section 51 (2) where it speaks of property purchased by the Board before July 7th, 1919, and these cases, it is suggested, are taken care of by the exemption in section 2 "unless the context otherwise requires"; the latter course is adopted.

2. The same considerations apply.

3. By Chapter 21 of the Statutes of 1917 known as *The Soldier Settlement Act, 1917*. the Governor in Council is given power to appoint a Board consisting of three commissioners to be called the Soldier Settlement Board: by section 3 of *The Soldier Settlement Act, 1919*, Chapter 71 of that year, it was provided that the Soldier Settlement Boardas constituted pursuant to the former Act (defined as meaning *The Soldier Settlement Act, 1917*) should continue to consist of three commissioners; provision is made in each Act that one of these commissioners is to be Chairman and to be appointed as such by the Governor in Council; presently proposed section follows as closely the language of its predecessors as due recognition of the desired changes will permit; subsection 4 is an addition considered necessary by the principle adopted, namely, change of interpretation instead of change of word throughout the Act where reference is made to the Board or to a commissioner and is calculated to meet those indirect references by pronoun or otherwise to the Soldier Settlement Board which cannot conveniently be covered or met by an interpretative clause. An example of this is to be found in section 5 in the phrase "attached to *its* service".

4. Section four of the said Act is repealed and the following is substituted therefor:—

Director to be a corporation sole and agent of Crown in right of Canada.

"**4.** (1) For the purposes of acquiring, holding, conveying and transferring and of agreeing to convey, acquire or transfer any of the property which he is by this Act authorized to acquire, hold, convey, transfer, agree to convey or agree to transfer, but for such purposes only the Director of Soldier Settlement shall be a corporation sole and as such the agent of the Crown in the right of the Dominion of Canada.

Property to vest in the Director. Director not subject to enactment respecting corporations.

(2) All property acquired for any of the purposes of this Act shall vest in the Director of Soldier Settlement as such corporation sole; but these provisions shall not in anywise restrict, impair or affect the powers conferred upon the Director of Soldier Settlement generally by this Act nor subject him to the provisions of any enactment of the Dominion or of any province respecting corporations.

Seal of Director.

(3) The Director of Soldier Settlement in his corporate capacity shall have an impress seal inscribed with the words "The Director of Soldier Settlement of Canada" and showing the coat of arms of Canada.

Execution of documents.

(4) All documents which require execution by the Director of Soldier Settlement in his corporate capacity shall be deemed validly executed if the said seal is affixed and the name of the Director of Soldier Settlement is signed thereto, the whole in the presence of one other person who has subscribed his name as witness; and every document which purports to have been impressed with the seal of the Soldier Settlement Board and sealed and signed in the presence of a witness by a commissioner on behalf of the said Board or which purports to be impressed with the seal of the Director of Soldier Settlement and to be sealed and signed in the presence of a witness by the Director of Soldier Settlement shall be admissible in evidence in all courts in Canada without proof of any such seal or of such sealing or signing."

Evidence.

5. Section sixty-one of the said Act is repealed and the following is substituted therefor:—

Franking privileges of Director.

"**61.** All letters and other mailable matter sent to or by the Director of Soldier Settlement at Ottawa shall be free of Canada postage under such regulations as are from time to time made in that respect by the Governor in Council."

Repeal of section providing for continuation in office of commissioners.

6. Section sixty-four of *The Soldier Settlement Act, 1919*, chapter seventy-one of the Statutes of 1919 (first session), so far as the same provides or may be held to provide for the continuation in office of the commissioners comprising the Soldier Settlement Board, is repealed.

4. This again is a close adaptation of the language of the present section to the proposed changes, a definite effort having been made to refrain from unnecessary departure from the language that has proved effective in administration and in the face of litigation; it has been necessary to change the body corporate to a corporation sole and to give a new seal; it is said that a corporation or body politic may be either aggregate (consisting of many members) or sole (consisting of one person only); subsection 2 provides for the immediate vesting in the Director of Soldier Settlement as such corporation of all property acquired for any of the purposes of the Act; as the corporation is the agent of the Crown it is not necessary that it should be subjected to ordinary legislation concerning corporations which might prove unduly restrictive in the operations of a corporation administered in the public interest; subsection 4 carries a slight alteration from the language of the present section owing to the necessity of keeping valid as evidence documents which have already been executed regularly by the Soldier Settlement Board and at the same time providing for the validity as evidence of documents to be executed in the future by its successor in office.

5. This is a close adaptation of the provisions of section 42 of the *Post Office Act* and, since an amendment is necessary, it is suggested that its broader terms are preferable as being in conformity with legislation on the subject.

6. Section 64 of the Act of 1919 reads as follows:—

"**64.** (1) *The Soldier Settlement Act, 1917*, is repealed, but notwithstanding, all officers and employees of the Board are continued in office and employment as if such repeal had not been had, all entries granted and loans made pursuant hereto shall, unless otherwise determined by the Board, remain subject to the terms and conditions on which such entries or loans were granted or made, and the Loan Regulations and Regulations affecting Dominion Lands made and approved under the said Act, shall, respectively, remain operative until lawfully repealed or amended.

(2) All matters instituted or things done under authority of,—

(a) The Soldier Settlement Act, 1917; or

(b) any regulations made thereunder; or

(c) any order of the Governor in Council; which might have been instituted or done under authority of this Act (though instituted or done before this Act was passed) shall, at the option of the Board, be deemed to have been instituted or done under authority of this Act, and any thereof which are now pending or in progress shall, at the option of the Board, be deemed to have originated under this Act and may be continued, completed and enforced hereunder."

This section was neither consolidated nor repealed by the Statute Revision Committee and so far as it may be read as continuing in office the personnel of the Board itself as well as the other officers and employees it appears necessary to repeal it. Section 3 of the Bill repeals the provision continuing in office the Soldier Settlement Board itself and section 6 is calculated similarly to affect the individual commissioners.

Second Session, Seventeenth Parliament, 21-22 George V, 1931

THE HOUSE OF COMMONS OF CANADA.

BILL 43.

An Act to amend the Criminal Code (Cheques without Funds.)

First reading, May 8, 1931

Mr. NEILL.

OTTAWA
F. A. ACLAND
PRINTER TO THE KING'S MOST EXCELLENT MAJESTY
27506 1931

2nd Session, 17th Parliament, 21-22 George V, 1931

THE HOUSE OF COMMONS OF CANADA.

BILL 43.

An Act to amend the Criminal Code
(Cheques without Funds.)

R.S., c. 36.

HIS Majesty, by and with the advice and consent of the Senate and House of Commons of Canada, enacts as follows:—

1. The *Criminal Code*, chapter thirty-six of the Revised Statutes of Canada, 1927, is amended by inserting the following section therein immediately after section four hundred and five:—

Cheques issued with no funds or insufficient funds in bank.

"**405A.** Every one who draws and issues a cheque on a chartered bank in Canada for the payment of money and at the time he draws and issues the cheque has no funds or insufficient funds on deposit in that bank to meet the cheque, and has no reasonable grounds to believe that the cheque will be paid by the bank, and to whom no credit has been extended by the bank at the time of the presentation of the cheque, and who, upon the refusal of the bank to honour the cheque does not, within a reasonable time, deposit in the bank to his credit a sufficient amount to meet the cheque or pay the amount of such cheque to the holder thereof, is guilty of an offence and liable on summary conviction, for a first offence to a penalty not exceeding one hundred dollars or to three months' imprisonment, and for a subsequent offence a penalty not exceeding two hundred dollars or to six months' imprisonment."

Explanatory Note.

The purpose of this Bill is to prevent the very common practice of issuing cheques by persons with no funds or insufficient funds on deposit in the bank to meet the cheques. Some cases fall within the provisions of section 405 of the Criminal Code relating to obtaining credit by false pretenses, but those provisions have not been sufficient in any general sense. While it is recognized that this subject is one of some difficulty in legislation, it is nevertheless important that some step be taken by fair and reasonable enactment to stop a practice indulged in too frequently by many persons without consideration of the inconvenience and trouble caused by dishonoured cheques.

Second Session, Seventeenth Parliament, 21-22 George V, 1931

THE HOUSE OF COMMONS OF CANADA.

BILL 44.

An Act to amend the Immigration Act.

First reading, May 11, 1931.

Mr. WOODSWORTH.

OTTAWA
F. A. ACLAND
PRINTER TO THE KING'S MOST EXCELLENT MAJESTY
27765 1931

2nd Session, 17th Parliament, 21-22 George V, 1931

THE HOUSE OF COMMONS OF CANADA.

BILL 44.

An Act to amend the Immigration Act.

R.S., c. 93.

HIS Majesty, by and with the advice and consent of the Senate and House of Commons of Canada, enacts as follows:—

1. The *Immigration Act*, chapter ninety-three of the Revised Statutes of Canada, 1927, is amended by inserting the following section therein immediately after section forty-two:—

No deportation after ten years' continuous residence.

"**42**A. (1) Nothwithstanding anything in this Act or any amendment thereof or regulations made thereunder, an immigrant who has completed ten years continuous residence in Canada, shall not thereafter be liable to deportation; and

Right to return to Canada after absence.

(2) No immigrant who has resided in Canada for a continuous period of ten years, and thereafter voluntarily leaves Canada to reside elsewhere on the continent of North America for the purpose of seeking employment or engaging in any occupation, and who desires to return to Canada, shall be refused re-entry into Canada by reason of such absence."

Explanatory Note.

1. Certain anomalies in the Immigration Act have resulted in hardships in many cases. For instance, people have been deported after having resided in Canada fifteen or twenty years; the purpose of subsection one of the new section forty-two is to fix a limit to the time during which deportation proceedings are possible.

Cases have also arisen, not infrequently, of people who had resided in Canada for many years and who had afterwards gone to the U.S.A. for a relatively short stay and who desiring to return to Canada, were not allowed to do so and were sent back to their country of origin. The purpose of subsection two is to provide for the re-admission into Canada of those who have resided therein for a sufficient length of time.

Second Session, Seventeenth Parliament, 21-22 George V, 1931

THE HOUSE OF COMMONS OF CANADA.

BILL 45.

An Act to amend the Canada Shipping Act.

First reading, May 11, 1931.

Mr. MacInnis.

OTTAWA
F. A. ACLAND
PRINTER TO THE KING'S MOST EXCELLENT MAJESTY
27766 1931

2nd Session, 17th Parliament, 21-22 George V, 1931

THE HOUSE OF COMMONS OF CANADA.

BILL 45.

An Act to amend the Canada Shipping Act.

R.S., c. 186.

HIS Majesty, by and with the advice and consent of the Senate and House of Commons of Canada, enacts as follows:—

1. The *Canada Shipping Act*, chapter one hundred and eighty-six of the Revised Statutes of Canada, 1927, is amended by inserting the following sections immediately after section two hundred and thirteen thereof:—

Medical inspection of seamen.

"**213**A. Any seaman applying for employment in any Canadian sea-going ship shall, be examined by the medical officer of the port, or other qualified physician before such ship is granted clearance, and such medical officer or physician shall give to the shipping master a report under his hand stating whether the seaman is in a fit state for duty at sea, and a copy of the report shall be given to the master or owner, and if such report finds that the seaman is not in a fit state for duty at sea he shall not be employed.

Inspection of water and provisions.

"**213**B. (1) All provisions and water intended for the use of the crew in any Canadian sea-going ship shall be inspected either on board the ship or before shipment, and if on such inspection the provisions or water are found to be in any respect deficient in quality, the ship shall be detained until the defects are remedied. Such inspection shall be made within the three days before the ship proceeds to sea, and another inspection shall be made if the inspecting officer has reason to suspect that any of the articles inspected have been subsequently removed, injured or destroyed.

otice of efects.

(2) If the inspecting officer is of opinion that the articles inspected are deficient in quantity or quality, or are placed in improper receptacles, he shall give notice in writing to the shipping master of the port where the ship is lying, and also to the master, owner or consignee thereof, and the master of the ship, before proceeding to sea, shall produce to the shipping master a certificate under the hand of the

Explanatory Notes.

1. The first two sections to be added by this Bill to the principal Act, are based upon provisions of the Merchant Shipping Acts, 1894 and 1906. (Imperial). They relate to the medical inspection of seamen, the inspection of water and provisions for the crew, and a scale of provisions.

The third section to be added prescribes the hours of labour on ships of Canadian registry, and for compensation for injury arising out of the seaman's employment.

inspector that the defaults found to exist have been remedied, and if such certificate is not produced, the ship shall be detained until it is produced.

Scale of provisions.

(3) The master of every such ship for which an agreement with the crew is required under this Act shall furnish provisions to the crew in accordance with a scale to be based upon the scale of provisions prescribed by the first schedule to the Merchant Shipping Act, 1906. The scale of provisions to be allowed and served out to the crew as set out in Form H in Schedule A to this Act shall thereupon be deemed to be repealed, and for the purposes of section two hundred and twelve of this Act (which provides for compensation in the case of short or bad provisions) every such member of the crew shall be deemed to have stipulated by his agreement for provisions in accordance with the scale so amended.

Hours of labour.

"**213C.** (1) The working hours for seamen on all Canadian sea-going ships shall not exceed eight hours per day except in cases of emergency.

Compensation for injuries.

(2) The master or owner of every such ship for which an agreement with the crew is required under this Act shall make provision for the payment of compensation to any member of the crew suffering an injury arising out of his employment, equal to that paid under the Workmen's Compensation Act in the province in which the ship is registered.

2. Subsection one of section five hundred and sixty of the said Act is repealed, and the following is substituted therefor:—

Board of Steamship Inspection.

"**560.** (1) There shall be a board to be called the Board of Steamship Inspection, to be composed of the inspectors, one representative from the National Association of Marine Engineers, and such other persons as the Minister may appoint."

3. Subsection one of section nine hundred and thirty-five of the said Act is repealed and the following is substituted therefor:—

Coasting trade to be only in ships registered in Canada.

"**935.** (1) No ship other than a ship duly registered in Canada shall engage in or take part in the coasting trade of Canada or carry goods or passengers from one port or place in Canada to another port or place in Canada. This provision shall apply to all ships operating on the coasts, inland waters, and minor waters of Canada, as defined in section seventy-three and section seven hundred and thirteen of this Act."

2. Subsection one of section 560, to be repealed and re-enacted, reads as follows:—

"**560.** There shall be a board to be called the Board of Steamboat Inspection, to be composed of the inspectors and such other persons as the Minister may appoint."

The underlined words in the text of the Bill show the proposed addition

3. Subsection one of section 935, to be repealed and re-enacted, reads as follows:—

"**935.** No goods or passengers shall be carried by water from one port of Canada to another, *except in British ships.*"

Regulations.

4. The Governor in Council, on the recommendation of the Minister, may make such rules and regulations as are deemed necessary to carry into effect the provisions of this Act.

Second Session, Seventeenth Parliament, 21-22 George V, 1931

THE HOUSE OF COMMONS OF CANADA.

BILL 46.

An Act to amend the Criminal Code (Regarding Bail).

First reading, May 14, 1931.

Mr. MACDONALD,
(Cape Breton South).

OTTAWA
F. A. ACLAND
PRINTER TO THE KING'S MOST EXCELLENT MAJESTY
27973 1931

2nd Session, 17th Parliament, 21-22 George V, 1931

THE HOUSE OF COMMONS OF CANADA.

BILL 46.

An Act to amend the Ciminal Code (Regarding Bail).

R.S., c. 36.

HIS Majesty, by and with the advice and consent of the Senate and House of Commons of Canada, enacts as follows:—

1. Subsection one of section ten hundred and nineteen of the *Criminal Code*, chapter thirty-six of the Revised Statutes of Canada, 1927, is repealed, and the following is substituted therefor:—

Bail.

"**1019.** (1) The trial Court or the Court of Appeal shall, in its discretion, upon proof that a notice of appeal or a notice of intention to apply for leave to appeal has been given by an appellant according to the rules made hereunder or the practice of such court, admit the appellant to bail with one or two sufficient sureties in such sums as the court thinks fit, to surrender at such time as the court directs."

EXPLANATORY NOTES.

The subsection to be repealed reads as follows:—

"**1019.** The *chief justice* or the *acting chief justice of the court of appeal* or *a judge of that court to be designated by him*, may if it seems fit, on the application of an appellant, admit the appellant to bail pending the determination of his appeal."

The underlined words in the text of the Bill indicate that the trial court or the Court of Appeal, instead of the chief justice or acting chief justice of the court of appeal or a judge to be designated by him, may admit an appellant to bail. The section as re-enacted is new.

Second Session, Seventeenth Parliament, 21-22 George V, 1931

THE HOUSE OF COMMONS OF CANADA.

BILL 47.

An Act to provide for the appointment of a Tariff Board.

First reading, May 15, 1931.

The MINISTER OF FINANCE.

OTTAWA
F. A. ACLAND
PRINTER TO THE KING'S MOST EXCELLENT MAJESTY
24885 1931

2nd Session, 17th Parliament, 21-22 George V, 1931

THE HOUSE OF COMMONS OF CANADA

BILL 47.

An Act to provide for the appointment of a Tariff Board.

HIS MAJESTY, by and with the advice and consent of the Senate and House of Commons of Canada, enacts as follows:—

PART I

Constitution and Duties of Board.

Short title.

1. This Act may be cited as *The Tariff Board Act.*

Definitions.

"Board".

"member".

"Minister".

"goods".

2. In this Act, unless the context otherwise requires,

(a) "Board" means the Tariff Board provided for by this Act;

(b) "member" means a member of the Tariff Board;

(c) "Minister" means the Minister of Finance;

(d) "goods" means products, wares and merchandise or moveable effects of any kind, including, but without limiting the generality of the foregoing, horses, cattle, and other animals.

Constitution of Board.

3. (1) There shall be a Board to be called the Tariff Board, consisting of three members appointed by the Governor in Council.

Chairman and vice-chairman.

(2) One of the members shall be appointed chairman and another vice-chairman by the Governor in Council, and at sessions of the Board the chairman shall preside, and in his absence the vice-chairman.

Term of office.

(3) Each member shall hold office during good behaviour for a period of ten years from the date of his appointment, but may be removed for cause at any time by the Governor in Council.

Age limit.

(4) A member shall cease to hold office upon reaching the age of seventy years.

Re-appointment.

(5) A member on the expiration of his term of office shall, if not disqualified by age, be eligible for re-appointment.

Explanatory Notes.

The purpose of this Bill is to create a Tariff Board. It is not the intention to delegate to the Board the duty and responsibility resting upon the Government of originating Bills for the raising of revenue, which will remain precisely as at present. The intention is to secure, as a result of the work of the Board, a constantly increasing body of information which will be of service to the Government and Parliament.

The Bill is divided into two Parts. The first relates to the constitution, powers and duties of the Board (Sections 1 to 10) and the second substitutes the Tariff Board for the Board of Customs (Sections 11 to 14).

The Board will consist of three members, one of whom will be chairman. They hold office for ten years, and cease to hold office upon reaching seventy years of age, and may be re-appointed if not disqualified by age. No member of the Board may be a candidate for the House of Commons within two years after his retirement (Section 3). The salaries and pensions of the members of the Board are set out in section 8, and they are required to give their whole time to the work and reside in or near Ottawa (Section 9).

A secretary to the Board is to be appointed (Section 7), and his duties and age limit and retiring allowance are prescribed in the same section. His salary is fixed by section 8. There is a provision for such officers, clerks and employees as may be required and for technical and special assistants (Section 7 (5) and 7 (6)). The secretary and other officials are to reside in or near Ottawa and give their whole time to their duties. (Section 9).

The duties of the Board are set out in section 4 of the Bill. As directed by the Minister, they are to inquire into the price and cost of raw materials, the cost of transportation, the cost of production, the cost, efficiency and conditions of labour, the prices received by producers, etc., in Canada or elsewhere, and all conditions and factors affecting cost of production and price to the consumers in Canada, and as compared with other countries. The Board is empowered to make inquiry into any other matter upon which the Minister desires information, in relation to any goods which if brought into Canada or produced in Canada are subject to or exempt from duties of customs or excise. This inquiry may be into the effect which an increase or decrease of the existing rate of duty upon a given commodity might have upon industry or trade, and the extent to which the consumer is protected from exploitation.

The Board is empowered to hold an inquiry into combinations which enhance prices, under section 15 of the Customs Tariff, R.S., c. 44, and under the Combines Investigation Act, R.S., c. 26 (Section 4 (3) and 4 (4)), and any other matter which may be referred to it by the Governor in Council.

The Board is to be a court of record with an official seal (Section 5 (6)), and is to have power to summon and examine witnesses (Section 5). Confidential evidence or information is not to be made public (Section 5 (10)).

Under Part II of the Bill the Tariff Board, from and after a date to be fixed by the Governor in Council, will exercise all the powers, functions and duties of the Board of Customs. The Board of Customs is very largely a committee of the executive heads of that Department, and if an importer makes appeal he is practically appealing to the Department itself to review the Department's own decision. The change would, therefore, seem advisable in the interests of justice. The present Board has performed a useful service, but it is felt that the growth of the Department and the assumption of additional duties demand that the work should be performed by an independent body, whose decisions will be published, as provided in section 12.

Temporary member in case of illness or incapacity.

(6) If any member by reason of illness or other incapacity is unable at any time to perform the duties of his position, the Governor in Council may make a temporary appointment of a qualified person to act in his place upon such terms and conditions and for such time as the Governor in Council may prescribe.

Not to be candidate for two years after retirement.

(7) No member shall be eligible to be a candidate for election to the House of Commons of Canada until after the expiration of two years from the date when he ceased to be a member of the Board.

Duties of Board.

4. (1) In respect of goods produced in or imported into Canada the Board shall, under the direction of the Minister, make inquiry as to—

Raw materials.

(a) the price and cost of raw materials in Canada and elsewhere, and the cost of transportation thereof from the place of production to the place of use or consumption;

Production.

(b) the cost of production in Canada and elsewhere, and what increases or decreases in rates of duty are required to equalize differences in the cost of production;

Labour.

(c) the cost, efficiency and conditions of labour, including health of employees, in Canada and elsewhere;

Prices.

(d) the prices received by producers, manufacturers, wholesale dealers, retailers and other distributors in Canada and elsewhere;

Conditions affecting cost and price.

(e) All conditions and factors which affect or enter into the cost of production and the price to the consumers in Canada;

In other countries.

(f) generally, all the conditions affecting production, manufacture, cost and price in Canada as compared with other countries;

and report to the Minister.

Inquiry by Minister.

(2) The Board shall make inquiry into any other matter, upon which the Minister desires information, in relation to any goods which, if brought into Canada or produced in Canada, are subject to or exempt from duties of customs or excise, and shall report to the Minister, and the inquiry into any such matter may include inquiry as to the effect which an increase or decrease of the existing rate of duty upon a given commodity might have upon industry or trade, and the extent to which the consumer is protected from exploitation.

Inquiry into combinations which enhance prices.

R.S., c. 44.

(3) The Board may be empowered by the Governor in Council to hold an inquiry under section fifteen of the *Customs Tariff*, in the same manner as the judge of the Exchequer Court or any other judge therein referred to may be so empowered, and the said section shall include and apply to the Board as if it were therein expressly named.

Powers under Combines Investigation Act. R.S., c. 26.

(4) The Governor in Council may empower the Board to make any investigation or hold any inquiry authorized by the provisions of the *Combines Investigation Act*, or of a relative nature, and for these purposes the Board shall have all the powers, authority and jurisdiction vested in the Registrar or in a commissioner appointed under that Act to hold investigations.

Inquiry into matters referred by Governor in Council.

(5) It shall also be the duty of the Board to inquire into any other matter or thing in relation to the trade or commerce of Canada which the Governor in Council sees fit to refer to the Board for inquiry and report.

Inquiries to be summary, and reports made.

(6) Inquiries under this section shall be conducted in a summary manner, and the respective reports to be made pursuant to its provisions shall succinctly state the facts so ascertained; and each report shall be accompanied by a copy of the evidence, if any, taken, and by a copy of all information obtained in connection with the inquiry.

Powers to summon witnesses, take evidence, and produce documents.

5. (1) The Board shall have the power of summoning before them any witnesses, and of requiring them to give evidence on oath, or on solemn affirmation if they are persons entitled to affirm in civil matters, and to produce such documents and things as the Board deem requisite.

Opportunity for appearance.

(2) The Board shall give reasonable opportunity to persons who may not have been summoned, to appear before them and give evidence upon oath or solemn affirmation as aforesaid, on any matter relevant to an inquiry then being held by the Board.

Witnesses need not attend outside of province where served.

(3) No person shall be compellable, against his will, to attend to give evidence or to produce documents or other things, at any place outside of the province in which he is served with the summons or other process issued for the purpose of an inquiry under this Act.

Witness fees.

(4) Every person summoned to attend, pursuant to the provisions of this section, shall, in the discretion of the Board or a member of the Board, as the case may be, receive the like fees and allowances for so doing as if summoned to attend before the Exchequer Court.

Compellable evidence.

(5) The Board shall have the same power to enforce the attendance of witnesses, and to compel them to give evidence, as is vested in any court of record in civil cases.

Court of record with seal.

(6) The Board shall be a court of record, and have an official seal which shall be judicially noticed.

Powers of one member.

(7) One member shall have power to conduct any inquiry under subsection one and subsection two of the next preceding section and may, for the purposes of such inquiry, exercise the powers conferred upon the Board by subsections one and five of this section.

Powers of two members.

(8) Two members shall have the power to conduct any inquiry under subsections three, four and five of the next preceding section and may, for the purposes of such inquiry,

exercise the powers conferred upon the Board by subsections one and five of this section.

Power to proceed on other than sworn evidence.

(9) For the purposes of any inquiry under this Act, the Board may obtain information, which in their judgment is authentic, otherwise than under the sanction of an oath or affirmation, and use and act upon such information.

Confidential evidence or information not to be made public.

(10) Should evidence or information which is in its nature confidential, relating to the business or affairs of any person, firm or corporation, be given or elicited in the course of any inquiry, the evidence or information shall not be made public in such a manner as to be available for the use of any business competitor or rival of the person, firm or corporation, respectively, but this subsection shall not apply to an inquiry under subsection three of section four of this Act. Any person who violates any of the provisions of this subsection shall be guilty of an offence and liable, on summary conviction, to a penalty not exceeding one thousand dollars or to twelve months' imprisonment.

Inquiries to be in Ottawa, but power to hold them elsewhere.

(11) Inquiries under this Act shall, whenever practicable, be conducted at some suitable place in the city of Ottawa, but the Board may, in its discretion, conduct such inquiries, either in whole or in part, in any other place in Canada, and, with the consent of the Minister, in any place outside of Canada.

Sessions and conduct of proceedings.

(12) The Board shall hold its sessions and conduct its proceedings in such manner as may seem to it most convenient for the speedy and efficient discharge of its duties.

Report and evidence to be laid before Parliament.

6. Whenever a report has been made under this Act, a copy thereof and a copy of the evidence, if any, taken, and of the information obtained (except such evidence and information as was of a confidential character under subsection ten of section five hereof) in connection therewith shall be laid before Parliament by the Minister within fifteen days after the opening of the next session thereafter, or within fifteen days after the making of the report if Parliament is then in session.

Secretary to Board.

7. (1) There shall be a secretary to the Board who shall be appointed by the Governor in Council.

Age limit and retiring allowance.

R.S., c. 24.

(2) The secretary shall cease to hold office upon reaching the age of sixty-five years, and his retirement from office shall be subject to the provisions of the *Civil Service Superannuation Act.*

Duties.

(3) It shall be the duty of the secretary—

(a) to attend all inquiries at which evidence under oath is taken, and to keep a record of all proceedings thereat;

(*b*) to have the care and custody of all records, books and documents belonging or appertaining to the work of the Board;

(*c*) to perform such other duties as may be assigned to him by the Board.

Absence of secretary.

(4) In the absence of the secretary from any cause, the Board may appoint an acting secretary from the persons employed by it, who shall perform the duties of the secretary.

Acting secretary.

Officers, clerks and employees.

(5) There shall be employed in the service of the Board such officers, clerks and other employees as the Governor in Council may see fit to appoint, and they shall respectively receive such salaries or remuneration as may be approved by the Governor in Council.

Technical or special assistance.

(6) The Governor in Council may, on the recommendation of the Board, appoint one or more persons having technical or special knowledge of any of the matters into which inquiry under this Act may be made, to assist the Board in making such inquiries, and may employ shorthand reporters, and the remuneration and period of service of such persons shall, on like recommendation, be as the Governor in Council determines.

Salaries and period of service.

Suspension and dismissal.

(7) The Board may, on its own motion, suspend or dismiss any officer, clerk, employee or other person appointed under the authority of this section.

Pensions.

8. (1) Every member who has served on the Board for a period of at least ten years may be granted an annuity for the term of his natural life equal to one-fourth of the annual salary received by him during such period, and if he has served for any period less than ten years but more than five years, he may be granted an annuity equal to one-fifth of the annual salary received by him during such period.

Salaries of members of Board.

(2) The chairman of the Board shall be paid an annual salary of twelve thousand dollars, and the other two members shall each be paid an annual salary of ten thousand dollars.

Salary of secretary.

(3) The secretary shall be paid an annual salary of six thousand dollars.

Moneys to be voted by Parliament.

(4) All salaries and actual and reasonable travelling expenses, and all other expenses incident to the carrying out of the provisions of this Act, shall be payable out of any appropriation granted to His Majesty by Parliament to defray the same.

Residence of officials.

9. (1) The Board, the secretary and other officers, clerks and employees shall reside in the city of Ottawa, or within five miles therefrom, or such other distance therefrom as the Governor in Council prescribes, and they shall severally devote their whole time to the respective duties imposed under the provisions of this Act, to the exclusion of any other office or employment.

Exception.

(2) This section shall not apply to persons appointed under subsection six of section seven of this Act.

Regulations.

10. The Governor in Council may make such regulations, not inconsistent with this Act, as he deems proper for the carrying out of the provisions and objects thereof.

PART II.

Tariff Board Substituted for Board of Customs.

Board to exercise duties of Board of Customs.

11. (1) From and after a date to be fixed by the Governor in Council, all the powers, functions and duties of the Board of Customs shall be assigned to and be transacted by the Tariff Board constituted by this Act.

Board substituted for Board of Customs.

(2) Wherever in any Act of the Parliament of Canada, or in any regulations or orders made thereunder, the Board of Customs is mentioned or referred to, the Tariff Board shall in each and every such case be substituted therefor.

Quorum.

(3) Two members of the Board shall be competent to transact the business of the Board under this Part at any meeting thereof called by the chairman or in his absence by the vice-chairman.

Other duties.

(4) The Board shall have such powers and perform such duties under this Part as are assigned to it by any Act of the Parliament of Canada or by the Governor in Council.

Access to documents and records.

(5) The Board in the exercise of the powers and duties assigned to it under this Part shall have the right of access to such documents and records, and may require and shall receive such information from any officer, clerk or employee of the public service, as it may deem necessary for its assistance in carrying out its duties.

Publication of decisions.

12. The Board shall cause its decision in any case brought before it under this Part to be published forthwith in the *Canada Gazette*.

Regulations.

13. The Governor in Council may make regulations not inconsistent with this Part or any Act of the Parliament of Canada as may be deemed necessary for carrying out the provisions of this Part.

Repeal of section constituting Board of Customs.

14. Section three of the *Customs Act*, chapter forty-two of the Revised Statutes of Canada, 1927, shall be deemed to be repealed from and after the date fixed by the Governor in Council for the transfer of the duties and powers of the Customs Board to the Tariff Board, as prescribed in section eleven of this Act.

Second Session, Seventeenth Parliament, 21-22 George V, 1931

THE HOUSE OF COMMONS OF CANADA.

BILL 49.

An Act to amend the Bank Act.

First reading, May 21, 1931.

Mr. SPENCER.

OTTAWA
F. A. ACLAND
PRINTER TO THE KING'S MOST EXCELLENT MAJESTY
28480 1931

2nd Session, 17th Parliament, 21-22 George V, 1931

THE HOUSE OF COMMONS OF CANADA.

BILL 49.

An Act to amend the Bank Act.

R.S., c. 12

HIS Majesty, by and with the advice and consent of the Senate and House of Commons of Canada, enacts as follows:—

1. Subsection one of section ninety-one of the *Bank Act*, chapter twelve of the Revised Statutes of Canada, 1927, is repealed, and the following is substituted therefor:—

Interest to 7 per cent may be charged.

"**91.** (1) The Bank may stipulate for, take, reserve or exact any rate of interest or discount not exceeding seven per cent per annum and may receive and take in advance any such rate, but no higher rate of interest shall be charged by the bank, and every bank which violates the provisions of this subsection shall be guilty of an indictable offence and liable, on conviction, to a fine not exceeding five thousand dollars, and everyone who, being a director, manager or officer of any bank, violates the said provisions shall be guilty of an indictable offence and liable, on conviction, to a fine not exceeding one thousand dollars or to imprisonment for a term not exceeding two years."

Penalty.

Explanatory Notes.

1. Subsection 1 of section 91 of the Bank Act, to be repealed and re-enacted, reads as follows:—

"**91.** (1) The Bank may stipulate for, take, reserve or exact any rate of interest or discount not exceeding seven per cent per annum and may receive and take in advance any such rate, but no higher rate of interest shall be *recoverable* by the bank."

The underlined words in the text of the Bill are new. The word "charged" is substituted for the word "recoverable" in the existing subsection. The object of the Bill is to prevent the banks from charging a higher rate of interest than seven per cent, and to make this provision operative by the imposition of penalties.

Second Session, Seventeenth Parliament, 21-22 George V, 1931

THE HOUSE OF COMMONS OF CANADA.

BILL 52.

An Act to amend the Board of Management of the Canadian District of the Evangelical Lutheran Joint Synod of Ohio and other States, and to change its name to the "Board of Management of the Canadian District of the American Lutheran Church."

First reading, May 25, 1931.

(PRIVATE BILL).

Mr. GERSHAW.

OTTAWA
F. A. ACLAND
PRINTER TO THE KING'S MOST EXCELLENT MAJESTY
25277 1931

2nd Session, 17th Parliament, 21-22 George V, 1931

THE HOUSE OF COMMONS OF CANADA.

BILL 52.

An Act to amend the Board of Management of the Canadian District of the Evangelical Lutheran Joint Synod of Ohio and other States, and to change its name to the "Board of Management of the Canadian District of the American Lutheran Church."

Preamble. 1913, c. 143.

WHEREAS the Board of Management of the Canadian District of the Evangelical Lutheran Joint Synod of Ohio and other States has by its petition prayed for the passing of an Act to change the name of the said Board and to change the place of its head office, and it is expedient to grant the prayer of the said petition: Therefore His Majesty, by and with the advice and consent of the Senate and House of Commons of Canada, enacts as follows:—

Name changed.

1. The Act to incorporate the Board of Management of the Canadian District of the Evangelical Lutheran Joint Synod of Ohio and other States, chapter one hundred and forty-three of the statutes of 1913, is hereby amended by replacing the words "Board of Management of the Canadian District of the Evangelical Lutheran Joint Synod of Ohio and other States" by the words "Board of Management of the Canadian District of the American Lutheran Church" wherever they occur in said Act but such change in name shall not in any way impair, alter or affect the rights or liabilities of the Board, nor in any way affect any suit or proceeding now pending or judgment existing either by or in favour of or against the Board, which, notwithstanding such change in the name of the Board, may be prosecuted, continued, completed and enforced as if this Act had not been passed.

2. Section three of chapter one hundred and forty-three of the statutes of 1913 is hereby repealed and the following is substituted therefor:

Head-Office.

"**3.** The head office of the Board shall be at the city of Medicine Hat in the province of Alberta."

Second Session, Seventeenth Parliament, 21-22 George V, 1931

THE HOUSE OF COMMONS OF CANADA.

BILL 53.

An Act for the Promotion of Vocational Education in Canada.

First reading, May 26, 1931.

The MINISTER OF JUSTICE.

OTTAWA
F. A. ACLAND
PRINTER TO THE KING'S MOST EXCELLENT MAJESTY
23420 1931

2nd Session, 17th Parliament, 21-22 George V, 1931.

THE HOUSE OF COMMONS OF CANADA.

BILL 53.

An Act for the Promotion of Vocational Education in Canada.

HIS Majesty, by and with the advice and consent of the Senate and House of Commons of Canada, enacts as follows:

Short title.

1. This Act may be cited as *The Vocational Education Act, 1931.*

"Minister."

2. In this Act the expression "Minister" means the Minister of Labour.

Amount appropriated.

3. A sum is hereby appropriated from the Consolidated Revenue Fund of Canada of seven hundred and fifty thousand dollars per annum, for a period of fifteen years, from which payments may be made annually to the government of any province for the purpose of promoting and assisting vocational education.

Agreement with province.

4. (1) The payments to be made to any province shall be conditional upon an agreement being entered into between the Minister and the government of the province as to the terms, conditions and purposes on and for which the payments are to be made and applied, and such agreements shall be subject in all cases to the approval of the Governor in Council.

Payments in proportion to population.

(2) The total payments made to the government of any province in any one year shall not exceed a proportion of the yearly appropriation mentioned in section three of this Act, corresponding to the proportion which the population of the province bears to the population of Canada, as determined by the latest federal decennial census.

Regulations.

5. The Governor in Council may, on the recommendation of the Minister, make regulations with respect to the following matters:—

(a) The definition of the expression "vocational education" in this Act;

Explanatory Note.

The purpose of this Bill is to authorize an annual appropriation from the Consolidated Revenue Fund of Canada of a sum of $750,000, for a period of fifteen years, from which payments may be made to the Governments of the various provinces for the purpose of promoting and assisting vocational education, under agreements made with the provincial Governments as to the terms, conditions and purposes on and for which the payments are to be made and applied.

The Bill authorizes the Governor in Council to make necessary administrative regulations.

(*b*) The particular types and grades of vocational education to which assistance may be granted;

(*c*) The procedure to be followed in the administration of this Act;

(*d*) The extent to which assistance may be made available towards the continuance of existing vocational education work;

(*e*) The extent to which assistance may be made available for lands, buildings, equipment and furnishings;

(*f*) The extent to which any portion of the annual appropriation under this Act remaining unexpended at the expiration of any fiscal year may be carried forward and remain available thereafter for the purposes of this Act;

(*g*) The auditing of vocational education accounts; and

(*h*) Any other matter as may be deemed expedient or necessary for the purpose of carrying out the provisions of this Act.

Officers and employees.

6. Such officers and employees as may be required for carrying out the provisions of this Act shall be appointed in the manner authorized by law.

Annual report.

Laid before Parliament.

7. The Minister shall make an annual report on or before the thirty-first day of March on the work done under the provisions of this Act, containing such information and particulars as the Governor in Council may prescribe, and such report shall be submitted to both Houses of Parliament by the Minister within fifteen days of the presentation of the report, if Parliament be then sitting, and if not, then within fifteen days after the opening of the next session of Parliament.

Second Session, Seventeenth Parliament, 21-22 George V, 1931

THE HOUSE OF COMMONS OF CANADA.

BILL 72.

An Act to amend the Prisons and Reformatories Act.

First reading, May 28, 1931.

The MINISTER OF JUSTICE.

OTTAWA
F. A. ACLAND
PRINTER TO THE KING'S MOST EXCELLENT MAJESTY
28252 1931

2nd Session, 17th Parliament, 21-22 George V, 1931

THE HOUSE OF COMMONS OF CANADA.

BILL 72.

An Act to amend the Prisons and Reformatories Act.

R.S., c. 163; 1928, c. 41.

HIS Majesty, by and with the advice and consent of the Senate and House of Commons of Canada, enacts as follows:—

1. Section one hundred of the *Prisons and Reformatories Act*, chapter one hundred and sixty-three of the Revised Statutes of Canada, 1927, is repealed and the following is substituted therefor:—

Roman Catholic females may be sentenced to reformatory instead of prison or gaol in Nova Scotia.

"**100.** If any female person who is a Roman Catholic is convicted in Nova Scotia of an offence against the law of Canada, and is sentenced and committed to a city prison or common gaol, any judge of the Supreme Court of Nova Scotia in any case arising in the Province of Nova Scotia, or any judge of a County Court in any case arising within his county or district, may summarily examine and inquire into the circumstances of such conviction, and may quash sentence to the said city prison or common gaol, and in substitution thereof sentence such female person under the provisions of the preceding section." (New.)

2. Section one hundred and twenty-one of the said Act is repealed and the following is substituted therefor:—

Roman Catholic females.

"**121.** Whenever any woman or girl, who is a Roman Catholic, is convicted in the province of New Brunswick of any offence against any law of Canada punishable by imprisonment for a maximum term of less than two years, the Court may sentence such woman or girl to imprisonment in the Good Shepherd Reformatory in the city of Saint John in the said province instead of the common gaol or other prison."

EXPLANATORY NOTES.

1. This section is new. The transfer therein mentioned was previously effected under the direction of the Provincial Secretary. The new section provides that it shall in future be ordered by a judge of the Supreme Court of N.S. or a judge of a County Court, according to circumstances. The section to be repealed reads as follows:—

"**100.** Any female Roman Catholic aged more than sixteen years, confined in any city prison or common gaol in the Province, under sentence of imprisonment for any offence against the law of Canada, may, by direction of the Provincial Secretary, be transferred from such city prison or common gaol to the Reformatory, to be imprisoned for the unexpired portion of the term of imprisonment to which such female was originally sentenced or committed to such city prison or common gaol.

2. Such female person shall thereupon be imprisoned in the Reformatory for the residue of the said term, and shall be subject to all the rules and regulations of the Reformatory."

See also section 150 of the Act.

2. The section to be repealed reads as follows:—(The amendment is made by leaving out the words in italics below):—

121. Whenever any woman or girl, who is a Roman Catholic, is convicted *in the city or county of St. John*, in the province of New Brunswick, of any offence against any law of Canada, punishable by imprisonment for a maximum term of less than two years, the court may sentence such woman or girl to imprisonment in the Good Shepherd Reformatory in the said city of Saint John instead of the common gaol or other prison.

The effect of the amendment is obvious. It will eliminate the restriction that only a woman or girl convicted in the city or county of Saint John might be sent to the Good Shepherd Reformatory and the section will now apply to convictions throughout the province.

3. The said Act is further amended by inserting immediately after section one hundred and twenty-one thereof the following sections:—

Imprisonment in the Good Shepherd Reformatory.

"**121A.** (1) Every judge, stipendiary magistrate or magistrate before whom any female person being a Roman Catholic is convicted in the province of New Brunswick of an offence against the law of Canada punishable by imprisonment in a city prison or common gaol for a term of two months or for any longer term, may sentence such female person to an extended or substituted imprisonment in the Good Shepherd Reformatory in the said city of Saint John, subject to the following conditions:—

If under 21 years.

(a) If such female person is under the age of twenty-one years, such extended imprisonment may be until she attains the age of twenty-one years, or for any shorter or longer term not less than two and not more in the whole than four years;

If of 21 years or upwards.

(b) If such female person is of the age of twenty-one years or upwards, such extended imprisonment may be for any term not less than one year and not more than two years."

Roman Catholic females may be sentenced to Reformatory instead of prison or gaol in New Brunswick.

(2) If any female person who is a Roman Catholic is convicted in New Brunswick of an offence against the law of Canada and is sentenced and committed to a city prison or common gaol, any judge of the Supreme Court of New Brunswick in any case occurring in his province, or any judge of a County Court in any case occurring within his county or district, may summarily examine and inquire into the circumstances of such conviction and may quash such sentence to the said city prison or common gaol, and, in substitution thereof, sentence such female person under the provisions of this section.

Escapes.

(3) If any female person, sentenced to the Good Shepherd Reformatory under the provisions of this section, escapes from such institution, she may at any time be apprehended without warrant and brought back to the said institution, there to be detained under the original commitment." (New.)

Refusal of prisoners.

"**121B.** The Superintendent or Keeper of the said Good Shepherd Reformatory may at any time notify the mayor, warden or other chief magistrate of any municipality within the said province of New Brunswick, that no such female persons, beyond those already under sentence in the said Good Shepherd Reformatory, will be received therein, and after such notification, no such female person shall be sentenced in such municipality to the Good Shepherd Reformatory until notice has been received by such mayor, warden or chief magistrate from the said Superintendent or Keeper that persons will be again received in the Good Shepherd Reformatory." (New.)

No sentences until further notice.

3. These sections (121A, B and C) are new. The intention is to adopt the same system in New Brunswick which already exists in Nova Scotia. See part IV of the Act, sections 99 to 107, also sections 155, 156 and 159.

Removal from Reformatory to prison.

"**121**c. The Attorney General of New Brunswick may from time to time on application from the Superintendent or Keeper of the said Good Shepherd Reformatory, by order, direct the removal from the said Good Shepherd Reformatory of any female person committed thereto under the provisions of this Act from the province of New Brunswick, back to a city prison or common gaol for the balance of the unexpired portion of the maximum sentence originally imposed on such female." (New.)

4. Section one hundred and twenty-three of the said Act is repealed and the following is substituted therefor:—

Conveyance of convicts.

"**123.** Any officer appointed by the Lieutenant-Governor, or other officer or person by his direction or by direction of the court or other lawful authority, may convey to the Good Shepherd Reformatory any convict sentenced to be imprisoned therein, and deliver her to the Superintendent or Keeper thereof, without any further warrant than a copy of the sentence, taken from the minutes of the court before which the offender was tried and certified by a judge, or the clerk, or acting clerk of such court, together with a certificate from a duly qualified medical practitioner that such female person is free from infectious and contagious diseases, and the said Superintendent or Keeper thereof may refuse to admit any convict sentenced to be imprisoned in the Good Shepherd Reformatory under the provisions of this Act unless such medical certificate accompanies the said copy of the sentence."

Warrant.

Medical certificate.

4. Section 123 to be repealed and re-enacted is the same as on the opposite page except for the addition of the underlined words at the end thereof. The amendment provides that when the convict is delivered to the Reformatory a medical certificate, that the person delivered is free from infectious and contagious diseases, shall accompany copy of the sentence. (See section 157 of the Act.)

Second Session, Seventeenth Parliament, 21-22 George V, 1931

THE HOUSE OF COMMONS OF CANADA.

BILL 73.

An Act to amend the Bankruptcy Act.

First reading, May 28, 1931.

The MINISTER OF JUSTICE.

OTTAWA
F. A. ACLAND
PRINTER TO THE KING'S MOST EXCELLENT MAJESTY
28375 1931

2nd Session, 17th Parliament, 21-22 George V, 1931

THE HOUSE OF COMMONS OF CANADA.

BILL 73.

An Act to amend the Bankruptcy Act.

R.S., c. 11.

HIS Majesty, by and with the advice and consent of the Senate and House of Commons of Canada, enacts as follows:—

1. The *Bankruptcy Act*, chapter eleven of the Revised Statutes of Canada, 1927, is amended by inserting after section one hundred and twenty-five thereof the following section:—

Proceeds of liability insurance policy on motor vehicles applied to claims against debtor.

"**125A.** Nothing contained in this Act shall affect the right afforded by provincial statute of any person who has a claim against the debtor for damages on account of injury to or death of any person, or injury to property, occasioned by a motor vehicle, or on account of injury to property being carried in or upon a motor vehicle, to have the proceeds of any liability insurance policy applied in or towards the satisfaction of such claim, and the proceeds of any such policy shall be applied to the satisfaction of such claim in the same manner and to the same extent as if the debtor had not made an authorized assignment or been adjudged brankrupt."

Explanatory Notes.

1. The purpose of this Bill is to provide that where any provincial statute declares that the proceeds of a motor vehicle liability policy may be applied to the payment of claims or judgments against the insured for damages, nothing contained in the Bankruptcy Act shall militate against such provisions, and the proceeds of any such policy shall be applied in payment of such claims as if the debtor had not made an assignment or been adjudged bankrupt.

Second Session, Seventeenth Parliament, 21-22 George V, 1931

THE HOUSE OF COMMONS OF CANADA

BILL 77.

An Act respecting the construction and maintenance of a bridge over the St. Lawrence river between the Island of Orléans and the coast of Beaupré, in the province of Quebec.

First reading, June 1, 1931.

(PRIVATE BILL)

MR. DORION.

OTTAWA
F. A. ACLAND
PRINTER TO THE KING'S MOST EXCELLENT MAJESTY
28850 1931

2nd Session, 17th Parliament, 21-22 George V, 1931

THE HOUSE OF COMMONS OF CANADA.

BILL 77.

An Act respecting the construction and maintenance of a bridge over the St. Lawrence river between the Island of Orléans and the coast of Beaupré, in the province of Quebec.

Preamble.

WHEREAS it has been by petition represented that it is in the interest of the district of the coast of Beaupré and of the Island of Orléans and of the whole of the province of Quebec to construct a bridge across the river St. Lawrence between the Island of Orléans and the coast of Beaupré, in the province of Quebec, and by virtue of chapter five of the statutes of the province of Quebec for the year 1931, the Government of the province of Quebec has been authorized to construct such bridge, and an Act of the Parliament of Canada authorizing the construction and maintenance of the said bridge and approving the site and plans of the said bridge is necessary: Therefore His Majesty, by and with the advice and consent of the Senate and House of Commons of Canada, enacts as follows:—

Construction of bridge authorized.

1. The Government of the province of Quebec is authorized to construct and maintain a bridge and its approaches for the passage of pedestrians, vehicles, carriages and other like purposes across the St. Lawrence river between the Island of Orléans and the coast of Beaupré in the province of Quebec.

Submission of plans for approval.

2. The said bridge, mentioned in section one hereof, shall be constructed and located under and be subject to such regulations for the security of navigation of the said river as the Governor in Council prescribes, and to such end the Government of the province of Quebec shall submit to the Governor in Council for examination and approval a design and drawing of the bridge and a map of the location giving the soundings accurately, showing the bed of the stream, and shall furnish such other information as is required for a full and satisfactory understanding of the

subject, and until the said plans and location are approved by the Governor in Council the said bridge shall not be built or commenced; and if any changes be made in the plans of the said bridge during its construction such changes shall be subject to the approval of the Governor in Council and shall not be made or commenced until it is so approved.

Second Session, Seventeenth Parliament, 21-22 George V, 1931

THE HOUSE OF COMMONS OF CANADA.

BILL 78.

An Act to repeal the Biological Board Act.

First reading, June 2, 1931.

THE MINISTER OF FISHERIES.

OTTAWA
F. A. ACLAND
PRINTER TO THE KING'S MOST EXCELLENT MAJESTY
23804 1931

2nd Session, 17th Parliament, 21-22 George V, 1931

THE HOUSE OF COMMONS OF CANADA.

BILL 78.

An Act to repeal the Biological Board Act.

R.S., c. 18; 1930, c. 4.

HIS Majesty, by and with the advice and consent of the Senate and House of Commons of Canada, enacts as follows:—

Act repealed.

1. The *Biological Board Act*, chapter eighteen of the Revised Statutes of Canada, 1927, as amended by chapter four of the Statutes of 1930, is hereby repealed.

Commencement of Act.

2. This Act shall come into force on proclamation of the Governor General in Council.

Second Session, Seventeenth Parliament, 21-22 George V, 1931

THE HOUSE OF COMMONS OF CANADA.

BILL 79.

An Act respecting the Canadian National Railways and to authorize the provision of moneys to meet expenditures made and indebtedness incurred during the calendar year 1931.

First reading, June 2, 1931.

THE MINISTER OF RAILWAYS AND CANALS.

OTTAWA
F. A. ACLAND
PRINTER TO THE KING'S MOST EXCELLENT MAJESTY
28921 1931

2nd Session, 17th Parliament, 21-22 George V, 1931

THE HOUSE OF COMMONS OF CANADA.

BILL 79.

An Act respecting the Canadian National Railways and to authorize the provision of moneys to meet expenditures made and indebtedness incurred during the calendar year 1931.

HIS Majesty, by and with the advice and consent of the Senate and House of Commons of Canada, enacts as follows:—

Short title.

1. This Act may be cited as *Canadian National Railways Financing Act, 1931.*

Power to borrow.

2. Subject to the provisions of this Act and the approval of the Governor in Council, the Canadian National Railway Company (hereinafter called "the Company") may issue notes, obligations, bonds, debentures or other securities (hereinafter called "securities") to provide the amounts necessary to meet expenditures made or indebtedness incurred during the calendar year 1931 (where amounts available from net operating income or investments may be insufficient) by or on behalf of the Company or any company comprised in the Canadian National Railways (as defined in chapter 10 of the Statutes of Canada, 1929), or any company controlled by stock ownership or otherwise by any company comprised in the Canadian National Railways, or by the Company in respect of any of the Canadian Government Railways entrusted to the Company, or any one or more of such companies, on any or all of the following accounts, such expenditures or indebtedness being herein called "authorized expenditures,"—

(a) Net income deficits, including profit and loss, but not including interest on Dominion Government advances, not exceeding $31,367,882.56;

(b) Equipment principal payments, sinking funds, miscellaneous maturing or matured notes and other obligations secured or unsecured, n ot exceeding $9,299,-613.44.

EXPLANATORY NOTE.

The object of this Bill is to authorize the Canadian National Railway Company to issue securities to the extent of $68,500,000.00 for the purpose during the year 1931, of financing where the amounts available from net operating income or investments may be insufficient.

(c) Construction and betterments, including coordinations; acquisition of real or personal property, and working capital, not exceeding $27,832,504.00.

Provided, however, that for such purposes the aggregate principal amount at any one time outstanding of the securities which the Company is hereby authorized to make and issue from time to time shall not exceed the sum of $68,500,000.00; and provided also that should the net income deficit mentioned in paragraph *(a)* of this section exceed the amount therein mentioned any such deficiency may be met from amounts mentioned in paragraph *(c)* which latter amount shall be reduced accordingly.

Approval by Governor in Council.

3. The Company may, subject to the approval of the Governor in Council, from time to time approve or decide:

(a) The kind of securities to be issued and the form and terms thereof;

(b) The currency or currencies in which any issue or parts thereof may be made;

(c) The times, manner and amount of the issue or issues;

(d) The terms and conditions of any sale, pledge or other disposition of the securities;

(e) The securing, if deemed desirable, of the securities by mortgage, deed of trust or other instrument and the manner thereof, and the form and terms of any such indenture and the trustee or trustees thereof;

(f) The manner, terms and conditions of any temporary financing and the expediency thereof and the form and terms of temporary securities.

Competitive bids.

4. (1) The Company shall adopt the principle of competitive bids or tenders in respect of any sale of the securities, but, subject to the provisions of paragraph *(d)* of section three of this Act, shall not be bound to accept either the highest or lowest or any bid or tender made or obtained, nor be precluded from negotiating for better prices or terms.

Proviso.

Temporary financing.

(2) This section shall not apply to temporary financing in whole or in part by way of pledge or otherwise of the securities either in permanent or temporary form, where the Governor in Council approves such temporary financing and the terms thereof.

Refunding of temporary loans.

5. Should temporary loans be made or negotiated within the limits aforesaid, securities may subsequently be issued under the provisions of this Act to renew, refund or adjust such loans or any part thereof.

Power to aid other companies.

6. The Company may aid and assist, in any manner, any other or others of the said companies, which expression as used here and hereinafter shall include the Canadian Government Railways entrusted as aforesaid, and, without limiting the generality of the foregoing, may for its own requirements and also for the requirements of any or all of such other companies from time to time:—

(a) Apply the proceeds of any issue of securities, or the amount of loans received by virtue of this Act, in meeting authorized expenditures on its own account or on account of any or all of such other companies;

(b) Make advances for the purpose of meeting authorized expenditures to any or all of such other companies, upon or without any security, at discretion.

Second Session, Seventeenth Parliament, 21-22 George V, 1931

THE HOUSE OF COMMONS OF CANADA.

BILL 80.

An Act to authorize an agreement between His Majesty the King and the Corporation of the City of Ottawa.

First reading, June 2, 1931.

The MINISTER OF PUBLIC WORKS.

OTTAWA
F. A. ACLAND
PRINTER TO THE KING'S MOST EXCELLENT MAJESTY
1931

27773

2nd Session, 17th Parliament, 21-22 George V, 1931

THE HOUSE OF COMMONS OF CANADA.

BILL 80.

An Act to authorize an agreement between His Majesty the King and the Corporation of the City of Ottawa.

1920, c. 15; 1924, c. 59; 1925, c. 21.

HIS Majesty, by and with the advice and consent of the Senate and House of Commons of Canada, enacts as follows:—

Agreement with City of Ottawa extended for one year.

1. The Minister of Public Works may on behalf of His Majesty the King enter into an agreement with the Corporation of the City of Ottawa, hereinafter called "the Corporation", extending for a period of one year from the first day of July, 1930, the provisions of the agreement between His Majesty the King and the Corporation, dated the thirtieth day of March, 1920, which last mentioned agreement was extended to the first day of July, 1930, under the authority of chapter fifty-nine of the statutes of 1924 and chapter twenty-one of the statutes of 1925.

Explanatory Note.

The operation of the agreement with the City of Ottawa of 30th March, 1920, was extended for one year by chapter 59 of the statutes of 1924. The agreement itself is set out in full as a schedule to chapter 15 of the statutes of 1920.

In chapter 21 of the statutes of 1925, the period of the agreement was extended for five years, to 1st July, 1930, and the Minister was empowered to agree on behalf of His Majesty to pay to the Corporation annually the sum of $100,000 during the said period of five years from 1st July, 1925, instead of the annual sum of $75,000 as provided for in the said agreement.

The present object is to extend the agreement for one year.

Second Session, Seventeenth Parliament, 21-22 George V, 1931

THE HOUSE OF COMMONS OF CANADA.

BILL 81.

An Act for granting to His Majesty certain sums of money for the public service of the financial year ending the 31st March, 1932.

AS PASSED BY THE HOUSE OF COMMONS, 8th JUNE, 1931.

OTTAWA
F. A. ACLAND
PRINTER TO THE KING'S MOST EXCELLENT MAJESTY
26081 1931

2nd Session, 17th Parliament, 21-22 George V, 1931

THE HOUSE OF COMMONS OF CANADA.

BILL 81.

An Act for granting to His Majesty certain sums of money for the public service of the financial year ending the 31st March, 1932.

MOST GRACIOUS SOVEREIGN,

Preamble.

WHEREAS it appears by messages from His Excellency the Right Honourable the Earl of Bessborough, etc., etc., Governor General of Canada, and the estimates accompanying the said messages that the sums hereinafter mentioned are required to defray certain expenses of the public service of Canada, not otherwise provided for, for the financial year ending the thirty-first day of March, one thousand nine hundred and thirty-two, and for other purposes connected with the public service: May it therefore please Your Majesty, that it may be enacted and be it enacted by the King's Most Excellent Majesty, by and with the advice and consent of the Senate and House of Commons of Canada, that:—

Short title.

1. This Act may be cited as *The Appropriation Act, No. 3, 1931.*

$20,099,723.71 granted for 1931-32.

2. From and out of the Consolidated Revenue Fund there may be paid and applied a sum not exceeding in the whole twenty million, ninety-nine thousand, seven hundred and twenty-three dollars and seventy-one cents towards defraying the several charges and expenses of the public service, from the first day of April, one thousand nine hundred and thirty-one, to the thirty-first day of March, one thousand nine hundred and thirty-two, not otherwise provided for, and being one-twelfth of the amount of each of the several items to be voted, set forth in the Estimates for the fiscal year ending the thirty-first day of March, one thousand nine hundred and thirty-two, as laid before the House of Commons at the present session of Parliament.

Additional interim vote of $1,154,091.25 granted for 1931-32 on certain items.

3. From and out of the Consolidated Revenue Fund there may be paid and applied, in addition to the amount granted therefor in the preceding section, a sum not exceeding in the whole one million, one hundred and fifty-four thousand, ninety-one dollars, and twenty-five cents towards defraying the several charges and expenses of the public service, from the first day of April, one thousand nine hundred and thirty-one, to the thirty-first day of March, one thousand nine hundred and thirty-two, not otherwise provided for, and being one-fourth of the amount of each of the several items to be voted set forth in Schedule A to this Act.

$943,832.33 granted for 1931-32.

4. From and out of the Consolidated Revenue Fund there may be paid and applied a sum not exceeding in the whole nine hundred and forty-three thousand, eight hundred and thirty-two dollars and thirty-three cents towards defraying the several charges and expenses of the public service, from the first day of April, one thousand nine hundred and thirty-one, to the thirty-first day of March, one thousand nine hundred and thirty-two, not otherwise provided for, and being one-twelfth of the amount of each of the several items to be voted set forth in Schedule B to this Act.

Account to be rendered in detail.

5. A detailed account of the sums expended under the authority of this Act shall be laid before the House of Commons of Canada during the first fifteen days of the then next session of Parliament.

SCHEDULE A.

Based on the Main Estimates, 1931-32. The amount hereby granted is $1,154,091.25, being one-fourth of the amount of each item in the Estimates as contained in this Schedule.

SUMS granted to His Majesty by this Act for the financial year ending 31st March, 1932, and the purposes for which they are granted.

No. of Vote	Service	Amount	Total
		$ cts.	$ cts.
	CIVIL GOVERNMENT		
80	Interior—		
	Salaries	850,000 00	
	Contingencies	80,000 00	
			930,000 00
	SCIENTIFIC INSTITUTIONS		
	DEPARTMENT OF THE INTERIOR		
	Topographical Surveys		
232	Topographical and aerial surveys and maps for the general development and administration of the country, including hydroelectric, forested, mineralized, agricultural and industrial areas; expenses of Geographic Board of Canada; centralization of all aerial photographic operations in co-operation with the Royal Canadian Air Force: traverse of northern rivers and lakes for administration of Northwest Territories; legal surveys of Dominion Lands; surveys for administration of Dominion Parks; testing of standard measures and instrument reprirs; plotting and printing of maps and plans, etc.	250,000 00	
	Amount required to pay the fees of the Board of Examiners for D.L.S. of the Secretary and of the sub-examiners and for travelling expenses, stationery, printing, rent of room and furniture, etc. (the fees of Messrs. F. H. Peters, W. M. Tobey and Harry Parry, members of the Board, and J. A. Cote, Secretary, are to be paid out of this sum)	2,000 00	
	Geodetic Survey of Canada		
233	Investigations, triangulations, precise levelling, geodetic astronomy, etc.	175,000 00	
	To recoup the Temiskaming and Northern Ontario Railway Commission in connection with their claim for injury to John Hedin	240 00	
			427,240 00
	DOMINION LANDS AND PARKS		
280	Dominion Lands, Seed Grain and Ordnance, Admiralty and Public Lands, Salaries and expenses, including amount required to pay expenses connected with seed grain and relief collections and half of expenses of Seed Grain and Relief Adjustment Board, etc.	125,000 00	
	To assist in publishing the transactions of the association of Dominion Land Surveyors	125 00	
	Advancement of forest conservation in Canada; stock-taking of forest resources; investigations of forest conditions and rates of growth, and development of scientific management methods; technical and economic investigations; forest protection studies; operation of field research stations, demonstration forests, tree nurseries, and laboratories; co-operative undertakings in forestry and forest products, etc.	400,000 00	

SCHEDULE A—*Concluded*

No. of Vote	Service	Amount	Total
		$ cts.	$ cts.
	DOMINION LANDS AND PARKS—*Concluded*		
	For investigations of water and power resources and of international waterway problems, the Dominion Hydrometric Survey, the Western Provinces Water Board, and for the administration of the Dominion Water Power and Irrigation Acts, etc.	250,000 00	
	To cover professional assistance engaged by the Governor-in-Council to assist the departmental officers who are advising *re* International and Boundary Waterway questions	12,000 00	
	Amount required to meet expenses of Lake of the Woods Control Board	8,000 00	
280	To provide for the expenses connected with the National Parks of Canada, historic sites, care of indigents in the Parks, the appointment of Stipendiary Magistrates in the Parks and the payment of their remuneration, etc.	1,319,200 00	
	Administration of the Migratory Birds Convention Act	56,750 00	
	To provide for the construction of the Golden-Revelstoke Highway	250,000 00	
	Scientific investigations relating to Canadian development and geography; engraving, lithographing, printing and preparation of maps, reports and kindred publications; salaries, etc.	175,000 00	
	Costs of litigation and legal expenses	12,000 00	
	To pay Mrs. E. S. Forbes a compassionate allowance equal to one-half of the salary of her husband, payable monthly	1,050 00	
	To provide for salaries and expenses of the staff of the supervisory Mining Engineer	50,000 00	
			2,659,125 00
	PENSIONS AND NATIONAL HEALTH		
284	Unemployment relief	600,000 00	
			600,000 00
	Total		4,616,365 00

SCHEDULE B.

Based on Estimates, 1931-32. The amount hereby granted is $943,832.33, being one-twelfth of the amount of each item in the Estimates as contained in this Schedule.

SUMS granted to His Majesty by this Act for the financial year ending 31st March, 1932, and the purposes for which they are granted.

No. of Vote	Service	Amount	Total
	CANADIAN NATIONAL STEAMSHIPS AND MARITIME FREIGHT RATES ACT	$ cts.	$ cts.
	LOAN TO CANADIAN GOVERNMENT MERCHANT MARINE, LTD.		
379	Loan to the Canadian National Steamships (Canadian Government Merchant Marine, Limited), repayable on demand with interest at a rate to be fixed by the Governor in Council upon such terms and conditions as the Governor in Council may determine, and to be applied in payment of:— Deficits in operation of the Company and of the vessels under the Company's control during the year ending December 31st, 1931	588,500 00	
	LOAN TO CANADIAN NATIONAL (WEST INDIES) STEAMSHIPS, LTD.		
380	Loan to the Canadian National (West Indies) Steamships, Limited, repayable on demand with interest at a rate to be fixed by the Governor in Council, upon such terms and conditions as the Governor in Council may determine, and to be applied in payment of:— Deficits in operation of the Company and of the vessels under the Company's control, during the year ending December 31st, 1931, and Interest Requirements	755,000 00	1,343,500 00
	MARITIME FREIGHT RATES ACT		
381	Amount required to provide for payment from time to time during the fiscal year 1931-32 of the difference, estimated by the Board of Railway Commissioners and certified by the said Board to the Minister of Railways and Canals, as and when required by him, occurring on account of the application of the Maritime Freight Rates Act, between the tariff tolls and the normal tolls (referred to in Section 9 of the said Act) on all traffic moved during 1931, under the tariffs, approved by the following companies:— Canada & Gulf Terminal Railway. Canadian Pacific Railway, including: Fredericton & Grand Lake Coal and Railway Co. New Brunswick Coal and Railway Company. Cumberland Railway and Coal Co. Dominion Atlantic Railway. Maritime Coal Railway & Power Co. Sydney & Louisburg Railway. Temiscouata Railway	900,000 00	
382	Amount required to provide for the payment from time to time to the Canadian National Railway Company of the deficit in receipts and revenues, occurring in the year 1931, of the Eastern Lines, as provided by the Maritime Freight Rates Act:— *(a)* Amount of the deficit (less that amount thereof as in the next following paragraph specifically provided for) in the receipts and revenues	6,631,856 00	
	(b) Amount of the deficit in receipts and revenues occurring on account of the reduction in tolls under the application of the Maritime Freight Rates Act	2,450,632 00	9,982,488 00
	Total		11,325,988 00

Second Session, Seventeenth Parliament, 21-22 George V, 1931.

THE HOUSE OF COMMONS OF CANADA.

BILL 82.

An Act to amend The Precious Metals Marking Act, 1928.

First reading, June 10, 1931.

The MINISTER OF TRADE AND COMMERCE.

OTTAWA
F. A. ACLAND
PRINTER TO THE KING'S MOST EXCELLENT MAJESTY
23513 1930

2nd Session, 17th Parliament, 21-22 Geo. V, 1931.

THE HOUSE OF COMMONS OF CANADA.

BILL 82.

An Act to amend The Precious Metals Marking Act, 1928,

R.S., c. 84; 1928, c. 40; 1929, c. 53.

HIS Majesty, by and with the advice and consent of the Senate and House of Commons of Canada, enacts as follows:—

Short title amended.

1. Section one of *The Precious Metals Marking Act, 1928*, chapter eighty-four of the Revised Statutes of Canada, 1927, as enacted by section two of chapter forty of the Statutes of 1928, is repealed, and the following is substituted therefor:—

Short title.

"**1.** This Act may be cited as the *Precious Metals Marking Act.*"

2. Subsection two of section seven of the said Act, as amended by section seven of chapter forty of the Statutes of 1928, is repealed, and the following is substituted therefor:—

'quality mark'.

"(2) If such an article has applied to it any mark, it must have applied to it a mark or marks, hereinafter called a 'quality mark', truly and correctly indicating, in the manner required by this Act, the quality of the gold or silver or platinum."

Obligatory mark.

3. Subsection three of section ten of the said Act is repealed.

Obligatory mark.

4. Subsection three of section eleven of the said Act is repealed.

Explanatory Notes

1. The short title is amended by deleting the figures "1928" at the end thereof, as the statute of 1928 only amended chapter eighty-four of the Revised Statutes without revising it entirely or bringing in a consolidation.

2. Subsection two of section seven, which it is intended to repeal and re-enact, reads as follows:—

"**2.** If such an article has applied to it any mark, it must have applied to it

(a) a trade mark or trade marks registered in accordance with the Trade Mark and Design Act; and

(b) a mark or marks, hereinafter called a 'quality mark' truly and correctly indicating, in the manner required by this Act, the quality of the gold or silver or platinum."

The only change is in deleting the underlined paragraph *(a)*, as it conflicts with section 12B of the Act as enacted by section one of chapter 53 of the statutes of 1929.

3 and **4.** The subsections to be repealed are the same, and read as follows:—

"**3.** If any such article has applied to it any mark, it must have applied to it a trade mark registered in accordance with the Trade Mark and Design Act."

The reason for repealing these subsections is the same as given above, that is that they conflict with section 12B of the Act, which reads as follows:—

"**12B.** If any article has applied to it any mark, it must have applied to it, if of Canadian manufacture, the grade mark of the manufacturer thereof, registered in accordance with the *Trade Mark and Design Act*, or, if such article is manufactured outside of Canada, it must have applied to it

(a) such trade mark of the manufacturer thereof; or

(b) the name of the importer of, or dealer in, such article accompanied by the word 'imported'."

Second Session, Seventeenth Parliament, 21-22 George V, 1931

THE HOUSE OF COMMONS OF CANADA.

BILL 83.

An Act respecting the Canadian National Railways and to authorize the guarantee by His Majesty of securities to be issued under the Canadian National Railways Financing Act, 1931.

First reading, June 10, 1931.

The MINISTER OF FINANCE.

OTTAWA
F. A. ACLAND
PRINTER TO THE KING'S MOST EXCELLENT MAJESTY
28917 1931

2nd Session, 17th Parliament, 21-22 George V, 1931

THE HOUSE OF COMMONS OF CANADA.

BILL 83.

An Act respecting the Canadian National Railways and to authorize the guarantee by His Majesty of securities to be issued under the Canadian National Railways Financing Act, 1931.

HIS Majesty, by and with the advice and consent of the Senate and House of Commons of Canada, enacts as follows:—

Short title.

1. This Act may be cited as *The Canadian National Railways Guarantee Act, 1931.*

Guarantee.

2. (1) The Governor in Council may authorize the guarantee of the principal, interest and sinking funds (if any) of the securities (hereinafter called "guaranteed securities") which the Canadian National Railway Company may make or issue from time to time under the provisions of the *Canadian National Railways Financing Act, 1931*, such guaranteed securities being limited to an aggregate principal amount at any one time outstanding of $68,500,000.00.

How signed.

(2) The guarantee or guarantees may be in such form and on such terms and conditions as the Governor in Council may determine to be appropriate and applicable thereto, and may be signed on behalf of His Majesty by the Minister of Finance or the Acting Minister of Finance, or by such other person as the Governor in Council may from time to time designate, and such signature shall be conclusive evidence for all purposes of the validity of the guarantee and that the provisions of this Act have been complied with.

Method of guarantee.

(3) Any such guarantee may be either a general guarantee covering the total amount of the issue, or by a separate guarantee endorsed on each obligation.

Temporary guarantee.

(4) With the approval of the Governor in Council, temporary guarantees may be made, to be subsequently replaced by permanent guarantees.

Explanatory Notes.

The object of this Bill is to authorize the guarantee by His Majesty of the securities, amounting to $68,500,000.00, of the Canadian National Railway Company as provided for in the Canadian National Railways Financing Act, 1931.

Proceeds paid to credit of Minister of Finance in trust.

3. (1) The proceeds of the sale, pledge or other disposition of any guaranteed securities shall be deposited in a bank or banks in a fund to the credit of the Minister of Finance in trust for the Company. The Board of Directors or the Executive Committee of the Company may from time to time authorize application to be made to the Minister of Railways and Canals for the release to the Company of any part of the proceeds so deposited for the purpose of meeting specified authorized expenditures within the respective limits mentioned in section two of the *Canadian National Railways Financing Act, 1931*, and the said Minister may in his discretion approve the said application and may request the Minister of Finance to release to the Company the amount or amounts covered by such application or parts thereof for the purposes therein specified.

(2) No purchaser of such guaranteed securities shall be under any obligation to inquire into the application of the proceeds of any issue of guaranteed securities, nor into the observance of any provision of subsection one of this section.

Temporary advances by His Majesty.

4. Pending the issue and disposal of such guaranteed securities, the Governor in Council may from time to time authorize advances to be made to the Company from the Consolidated Revenue Fund, or to be obtained by the Company from persons other than His Majesty, on such terms and conditions as the Governor in Council may approve, such advances to be reimbursed by the Company from the proceeds of the sale, pledge or other disposition of such guaranteed securities.

Second Session, Seventeenth Parliament, 21-22 George V, 1931

THE HOUSE OF COMMONS OF CANADA

BILL 84.

An Act to amend The Alberta Natural Resources Act.

First reading, June 11, 1931.

The MINISTER OF THE INTERIOR.

OTTAWA
F. A. ACLAND
PRINTER TO THE KING'S MOST EXCELLENT MAJESTY
28992 1931

2nd Session, 17th Parliament, 21-22 George V, 1931

THE HOUSE OF COMMONS OF CANADA.

BILL 84.

An Act to amend The Alberta Natural Resources Act.

1930, c. 3.

HIS Majesty, by and with the advice and consent of the Senate and House of Commons of Canada, enacts as follows:—

Short title.

1. This Act may be cited as *The Alberta Natural Resources Act, No. 2,* and *The Alberta Natural Resources Act,* chapter three of the Statutes of 1930 (first session), and this Act may be cited together as *The Alberta Natural Resources Acts.*

Agreement confirmed.

2. The agreement set out in the schedule hereto is hereby confirmed and shall take effect according to its terms.

Explanatory Notes.

The date for the coming into force of the Agreement to Transfer the Natural Resources from the Dominion to the Province of Alberta was fixed as the first day of August, 1930. At the request of the Province the presently existing powers and rights of the Dominion and the Province were continued by Agreement until the first day of October, 1930. This Bill is necessary to ratify that Supplementary Agreement.

SCHEDULE

MEMORANDUM OF AGREEMENT

Made this 29th day of July, 1930.

BETWEEN

THE GOVERNMENT OF THE DOMINION OF CANADA, represented herein by the Honourable Charles Stewart, Minister of the Interior,

Of the first part,

AND

THE GOVERNMENT OF THE PROVINCE OF ALBERTA, represented herein by the Honourable John Edward Brownlee, Premier of Alberta,

Of the second part.

Whereas by paragraph 24 of the agreement made between the parties hereto on the 14th day of December, 1929, it was agreed that the provisions of the said agreement might be varied by agreement confirmed by concurrent statutes of the Parliament of Canada and the Legislature of the Province;

And Whereas it was further provided by certain clauses of the said agreement, more particularly paragraphs 1, 6, 8, 9, 18, 20, 21 and 23, that the relations of the parties thereto should be altered as in the said agreement specified from and after the date of the coming into force thereof, and the date upon which it was then contemplated that it should come into force, as defined by paragraph 25, has now been ascertained as being the 1st day of August, 1930;

And Whereas the Government of the Province has requested that the presently existing powers and rights of each of the parties should continue without alteration until the 1st day of October, 1930, and the parties hereto have agreed accordingly.

Now Therefore This Agreement Witnesseth That:

1. Notwithstanding anything in the said agreement contained, any expression therein contained which defines a date by reference to which the powers or rights of either of the parties are to be altered shall be read as referring to the 1st day of October, 1930, instead of the 1st day of August in that year.

2. The Government of Canada will recommend to Parliament and the Government of the Province of Alberta will recommend to the Legislature of the said Province such legislation as may be necessary to give effect to this agreement.

In Witness Whereof the Honourable Charles Stewart, Minister of the Interior, has hereunto set his hand on behalf of the Dominion of Canada, and the Honourable John Edward Brownlee, Premier of Alberta, has hereunto set his hand on behalf of the said Province.

Signed on behalf of the Government of Canada by the Honourable Charles Stewart, Minister of the Interior, in the presence of

W. W. CORY.

CHAS. STEWART.

Signed on behalf of the Province of Alberta by the Honourable John Edward Brownlee, Premier of the said Province in the presence of

E. A. BROWN.

J. E. BROWNLEE.

Second Session, Seventeenth Parliament, 21-22 George V, 1931

THE HOUSE OF COMMONS OF CANADA.

BILL 85.

An Act to amend The Saskatchewan Natural Resources Act.

First reading, June 11, 1931.

The MINISTER OF THE INTERIOR.

OTTAWA
F. A. ACLAND
PRINTER TO THE KING'S MOST EXCELLENT MAJESTY
28996 1931

2nd Session, 17th Parliament, 21-22 George V, 1931

THE HOUSE OF COMMONS OF CANADA.

BILL 85.

An Act to amend The Saskatchewan Natural Resources Act.

1930, c. 41.

HIS Majesty, by and with the advice and consent of the Senate and House of Commons of Canada, enacts as follows:—

Short title.

1. This Act may be cited as *The Saskatchewan Natural Resources Act, No. 2*, and *The Saskatchewan Natural Resources Act*, chapter forty-one of the Statutes of 1930 (first session), and this Act may be cited together as *The Saskatchewan Natural Resources Acts.*

Agreement confirmed.

2. The agreement set out in the schedule hereto is hereby confirmed and shall take effect according to its terms.

Explanatory Note.

The date for the coming into force of the Agreement to Transfer the Natural Resources from the Dominion to the Province of Saskatchewan was fixed as the first day of August, 1930. At the request of the Province the presently existing powers and rights of the Dominion and the Province were continued by Agreement until the first day of October, 1930. This Bill is necessary to ratify that Supplementary Agreement.

SCHEDULE

MEMORANDUM OF AGREEMENT

Made this 7th day of August, 1930.

BETWEEN:

THE GOVERNMENT OF THE DOMINION OF CANADA, represented herein by the Honourable Charles Stewart, Minister of the Interior,

Of the first part,

AND

THE GOVERNMENT OF THE PROVINCE OF SASKATCHEWAN, represented herein by the Honourable James Thomas Milton Anderson, Premier of Saskatchewan,

Of the second part.

Whereas by paragraph 26 of the agreement made between the parties hereto on the 20th day of March, 1930, it was agreed that the provisions of the said agreement might be varied by agreement confirmed by concurrent statutes of the Parliament of Canada and the Legislature of the Province;

And whereas it was further provided by certain clauses of the said agreement, more particularly paragraphs 1, 6, 8, 9, 19, 21, 22 and 25, that the relations of the parties thereto should be altered as in the said agreement specified from and after the date of the coming into force thereof, and the date upon which it was then contemplated that it should come into force, as defined by paragraph 28, has now been ascertained as being the 1st day of August, 1930;

And whereas the Government of the Province has requested that the presently existing powers and rights of each of the parties should continue without alteration until the 1st day of Ooctober, 1930, and the parties hereto have agreed accordingly:

Now Therefore This Agreement Witnesseth that:

1. Notwithstanding anything in the said agreement contained, any expression therein contained which defines a date by reference to which the powers or rights of either of the parties are to be altered shall be read as referring to the 1st day of October, 1930, instead of to the 1st day of August in that year.

2. The Government of Canada will recommend to Parliament and the Government of the Province of Saskatchewan will recommend to the Legislature of the said Province such legislation as may be necessary to give effect to this agreement.

In Witness Whereof the Honourable Charles Stewart, Minister of the Interior, has hereunto set his hand on behalf of the Dominion of Canada, and the Honourable James Thomas Milton Anderson, Premier of Saskatchewan, has hereunto set his hand on behalf of the said Province.

Signed on behalf of the Government of Canada by the Honourable Charles Stewart, Minister of the Interior, in the presence of
W. J. F. PRATT.

CHAS. STEWART.

Signed on behalf of the Province of Saskatchewan by the Honourable James Thomas Milton Anderson, Premier of the said Province, in the presence of
W. W. CORY.

J. T. M. ANDERSON.

Second Session, Seventeenth Parliament, 21-22 George V, 1931

THE HOUSE OF COMMONS OF CANADA.

BILL 86.

An Act to incorporate The Sarnia and Port Huron Vehicular Tunnel Company

First reading, June 12, 1931.

(PRIVATE BILL).

Mr. GRAY.

OTTAWA
F. A. ACLAND
PRINTER TO THE KING'S MOST EXCELLENT MAJESTY
29563 1931

2nd Session, 17th Parliament, 21-22 George V, 1931

THE HOUSE OF COMMONS OF CANADA

BILL 86.

An Act to incorporate The Sarnia and Port Huron Vehicular Tunnel Company.

Preamble.

WHEREAS a petition has been presented praying for the incorporation of a company to lay out, construct, complete, maintain, work, manage and use subways or tunnels under the St. Clair River for vehicular, pedestrian or other purposes with the necessary approaches from convenient points on the Canadian side of the International Boundary between the United States of America and the Dominion of Canada in or near the city of Sarnia, the township of Sarnia and the township of Moore, to points in or near the city of Port Huron and the city of Marysville, in the State of Michigan, one of the United States of America, as hereinafter set forth and it is expedient to grant the prayer of the said petition: Therefore His Majesty, by and with the advice and consent of the Senate and House of Commons of Canada, enacts as follows:—

Incorporation.

1. John Doherty, service station proprietor, John Alexander Dalziel, operator, Hugh Arthur Mustard, dental surgeon, John Thomas Kennedy, merchant, all of the city of Sarnia, in the county of Lambton, and Frederick Wellington Martin, manager, of the city of Windsor, in the county of Essex, in the province of Ontario, together with such persons as become shareholders in the company hereby incorporated, are hereby constituted a body corporate under the name of "The Sarnia and Port Huron Vehicular Tunnel Company," hereinafter called "the Company".

Corporate name.

Declaratory.

2. The works and undertakings of the Company are declared to be for the general advantage of Canada.

Provisional directors.

3. The said John Doherty, service station proprietor, John Alexander Dalziel, operator, Hugh Arthur Mustard, dental surgeon, John Thomas Kennedy, merchant, and

Frederick Wellington Martin, manager, named in section one of this Act, are constituted the provisional directors of the Company.

Head office.

4. The head office of the Company shall be at the city of Sarnia in the county of Lambton, in the province of Ontario.

Capital stock.

5. (1) The capital stock of the Company shall consist of one hundred thousand shares without nominal or par value.

Shares.

(2) Each share of the capital stock without nominal or par value shall be equal to every other share of such capital stock. Every certificate of shares without nominal or par value shall have plainly written or printed upon its face the number of shares which it represents and the number of such shares which the Company is authorized to issue, and no such certificate shall express any nominal or par value of such shares.

Issue of shares.

(3) The issue and allotment of shares authorized by this section may be made from time to time for such consideration as may be fixed by the board of directors by by-law duly confirmed by the holders of two-thirds of the shares then outstanding, at a meeting called for that purpose in such manner as is prescribed by the by-laws of the Company. Any and all shares issued as permitted by this section shall be deemed fully paid and non-assessable and the holder of such shares shall not be liable to the Company or to its creditors in respect thereof.

Capital requisite for carrying on business.

(4) The amount of capital with which the Company shall carry on business shall be not less than the aggregate amount of the consideration for the issue and allotment of the shares without nominal or par value from time to time outstanding.

Deposit before commencing operations, etc.

(5) The Company shall not commence its operations or incur any liability before a sum of at least twenty-five thousand dollars has been paid into the treasury of the Dominion of Canada, which sum shall not be withdrawn until at least twenty-five per cent of the proposed tunnel is constructed and such sum shall be forfeited if the project is not proceeded with.

Bonding powers.

6. (1) The Company may issue bonds, debentures or other securities to an amount not exceeding five million dollars in aid of the construction of the subways or tunnels authorized by this Act; and such bonds, debentures or other securities shall be secured by deed of mortgage; and such deed of mortgage may contain provisions that all tolls and revenues derived from the use of such subways or tunnels by other corporations or persons shall be specially charged and pledged as security for such bonds and may also pro-

vide that the Company shall pay to the trustees of such mortgage, rates and tolls similar to those fixed for the use of the subways or tunnels by similar corporations, which rates and tolls may also be charged as security for such bonds.

Conversion into common shares.

(2) At any time after the expiration of three years from the completion and first commencement of operation of the said subways or tunnels, the holders of any bonds or debentures of the Company shall have the right to convert the same into common shares of the Company at the rate of ten shares per hundred dollars face amount of such bonds or debentures.

Amalgamation with other companies.

R.S., c. 170.

7. The Company may, subject to the provisions of sections 151 to 153 inclusive, of the *Railway Act*, enter into an agreement with any other company incorporated by the laws of Canada or the laws of the State of Michigan or Delaware, two of the United States of America, for the purpose of uniting and amalgamating its stock, property and franchise with the stock, property and franchises of any such company.

Effect of amalgamation.

8. Upon the agreement for amalgamation coming into effect as provided in the last preceding section, all and singular the property, real, personal and mixed, and all rights and interest appurtenant thereto, all stock subscriptions and other debts due on whatever account, and other things in action belonging to such companies or either of them, shall be taken and deemed to be transferred to and vested in such new company, without further act or deed: Provided, however, that all rights of creditors and all liens upon the property of either of such companies shall be unimpaired by such amalgamation, and all debts, liabilities and duties of either of the said companies shall thenceforth attach to the new company and may be enforced against it to the same extent as if the said debts, liabilities and duties had been incurred or contracted by it: Provided also, that no action or proceedings, legal or equitable, by or against the said companies so amalgamated or either of them, shall abate or be affected by such amalgamation, but for all the purposes of such action or proceeding such company may be deemed still to exist, or the new company may be substituted in such action or proceeding in the place thereof.

Right of voting.

9. At all meetings of the shareholders of the amalgamated company hereinbefore provided for, each shareholder shall be entitled to cast one vote for each share of stock held by him, and to vote either in person or by proxy.

Powers.

10. The Company may,—

Subways or tunnels.

(a) lay out, construct, complete, maintain, work, manage and use subways or tunnels under the St. Clair River, for vehicular, pedestrian, railway and other purposes, with the necessary approaches from convenient points on the Canadian side of the International Boundary between the United States of America and the Dominion of Canada in or near the city of Sarnia the township of Sarnia and the township of Moore, to points in or near the city of Port Huron, and the city of Marysville, in the state of Michigan, one of the United States of America.

Elevators, etc.

(b) construct, maintain and operate elevators, lifts escalators and other means of ingress to and egress from the said subways or tunnels;

Electrical and other power.

(c) manufacture, produce, generate or buy electricity for light, heat and motive power and to produce compressed air;

Acquisition of shares in other companies.

(d) take, or otherwise acquire and hold shares in any other company having objects altogether or in part similar to those of the Company or carrying on any business capable of being conducted so as directly or indirectly to benefit the company;

Arrangements with municipal and other authorities.

(e) enter into any arrangements with any authorities, municipal, local or otherwise, that may seem conducive to the Company's objects, or any of them, and obtain from any such authority any rights, privileges and concessions which the Company may think it desirable to obtain, and to carry out, exercise and comply with any such arrangements, rights, privileges and concessions;

Promotion of subsidiary companies.

(f) promote any company or companies for the purpose of acquiring all or any of the property and liabilities of the Company, or for any other purpose which may seem directly or indirectly calculated to benefit the Company;

Acquisition of personal property, rights, etc.

(g) purchase, take on lease or in exchange, hire or otherwise acquire any personal property and any rights or privileges which the Company may think necessary or convenient for the purposes of its business and in particular any machinery, plant and stock-in-trade;

Disposal of company's undertaking.

(h) sell or dispose of the undertaking of the Company or any part thereof for such consideration as the Company may think fit, and in particular for shares, debentures or securities of any other company having objects altogether or in part similar to those of the Company;

Incidental powers.

(i) do all such other things as are incidental or conducive to the attainment of the above objects;

Acquisition of rights.

(j) apply for, secure, acquire by assignment, transfer, purchase or otherwise, and exercise, carry out and enjoy, any charter, licence, power, authority, franchise, concession, rights or privileges, which any government or authority or any corporation or other public body may be empowered to grant, and pay for, aid in and contribute towards carrying the same into effect, and appropriate any of the Company's shares, bonds and assets to defray the necessary costs, charges and expenses thereof;

Assistance to other companies.

(k) raise and assist in raising money for, and aid by way of bonus, loan, promise, endorsement, guarantee of bonds, debentures or other securities or otherwise, any other company or corporation, and guarantee the performance of contracts by any such company or corporation, or by any other person or persons with whom the Company may have business relations.

Application of R.S., 1927, cc. 54, 55, 140, 170, and of R.S., 1906, c. 37, s. 247.

11. The powers granted under the next preceding section hereof shall be subject to the provisions of the *Electricity and Fluid Exportation Act*, chapter fifty-four of the Revised Statutes of Canada, 1927, the *Electricity Inspection Act*, chapter fifty-five of the Revised Statutes of Canada, 1927, the *Navigable Waters Protection Act*, chapter one hundred and forty of the Revised Satutes of Canada, 1927, the *Railway Act*, chapter one hundred and seventy of the Revised Statutes of Canada, 1927, and section two hundred and forty-seven of the *Railway Act*, chapter thirty-seven of the Revised Statutes, of Canada, 1906.

Approval of plans by Governor in Council.

12. The Company shall not commence the said subways or tunnels or any of them or any work thereunto appertaining, until it has submitted to the Governor in Council plans of such subways or tunnels, and all the intended works thereunto appertaining, nor until such plans and the site of such subways or tunnels have been approved by the Governor in Council, and such conditions as he thinks fit for the public good to impose, touching the said subways or tunnels and works, have been complied with; nor shall any such plans be altered, or any deviation therefrom be allowed except with the permission of the Governor in Council, and upon such conditions as he imposes.

13. The Company may,—

Expropriation.

(a) expropriate and take any lands actually required for the construction, maintenance and operation of the subways or tunnels authorized by this Act, or expropriate and take an easement in, over, under or through such lands without the necessity of acquiring a title in fee simple thereto, after the plan of such lands

has been approved by the Governor in Council; and all the provisions of the *Railway Act*, applicable to such taking and acquisition, shall apply as if they were included in this Act; and all the provisions of the *Railway Act* which are applicable, shall in like manner apply to the ascertainment and the payment of the compensation for or damages to land arising out of such taking and acquisition, or the construction or maintenance of the works of the Company;

R.S., c. 170.

Reduction of damages.

(b) in reduction of the damage or injury to any lands taken or affected by such authorized works, abandon or grant to the owner of party interested therein any or portion of such lands, or any easement or interest therein, or make any structures, works or alterations in or upon its works for such purposes. And if the Company by its notice of expropriation or some subsequent notice, prior to the first meeting of the arbitrators, specify its decision to take only such easement or undertake to abandon or grant such lands or easement or interest in lands, or to make such structures or works or alterations, the damages (including damages, if any, resulting from the change in the notice of expropriation) shall be assessed by the arbitrators appointed pursuant to the provisions of the *Railway Act*, in view of such specified decision or undertaking, and the arbitrators or arbitrator shall declare the basis of their award accordingly, and such award, as well as such specified decision or undertaking of the Company, may be enforced by the Board of Railway Commissioners for Canada;

R.S., c. 170.

Entry on property.

(c) enter into and upon any lands, buildings or structures proximate to the said subways or tunnels, for the purpose of ascertaining the state of repair thereof, and for devising the best means of avoiding any possible damage which the execution of the authorized works might occasion thereto, and make upon or in connection therewith any works, repairs, or renewals, for the purpose of preventing or mitigating any such damage, and the Company shall make compensation in the manner specified in the *Railway Act*, to all persons interested for the damage sustained by them, if any, by reason of the exercise of the powers in this clause contained; and section two hundred and thirty-nine of the *Railway Act*, shall apply to the exercise of the powers in this clause granted so far as is necessary to enable the Company to carry them into effect.

R.S., c. 170.

Approval by United States.

14. The Company shall not commence the actual construction of the said subways or tunnels until permitted by the Congress of the United States of America or other competent authority in the said United States of America,

but the company may in the meantime acquire the lands, submit its plans to the Governor in Council and do all other things authorized by this Act.

Consent of municipalities.

15. The Company shall not construct or operate any of the works mentioned in this Act along, under and over any highway, street or other public place, without first obtaining the consent, expressed by by-law, of the municipality having jurisdiction over such highway, street or other public place, and upon terms to be agreed upon with such municipality.

Tolls and rates.

16. The directors may fix and regulate the tolls and rates to be charged, and such tolls and rates, before being imposed, shall be submitted to and approved by the Board of Railway Commissioners for Canada, which Board may revise the same from time to time.

Time for commencement and completion of subways.

17. The said subways or tunnels shall be commenced within one year after the Governor in Council and the Executive of the United States, or other competent authority therein, have approved thereof, and shall be completed within five years after such commencement, otherwise the powers granted by this Act shall cease and be null and void as respects so much of the undertaking as then remains uncompleted: Provided, however, that if such approval is not obtained within two years after the passing of this Act, the powers granted for the construction of the said subway shall cease and be null and void. Section one hundred and sixty-one of the *Railway Act* shall not apply to the Company.

R.S., c. 170.

R.S., c. 170 to apply to the Company.

18. The *Railway Act* shall, so far as is not inconsistent with the special provisions of this Act, unless the context otherwise requires, apply to the Company and to its works and undertakings and wherever in the *Railway Act* the word "railway" occurs, it shall, for the purposes of the Company, mean the subways and tunnels authorized by this Act.

R.S., c. 27, not to apply.

19. The *Companies Act* shall not apply to the Company.

Second Session, Seventeenth Parliament, 21-22 George V, 1931

THE HOUSE OF COMMONS OF CANADA.

BILL 87.

An Act to amend the Root Vegetables Act.

First reading, June 12, 1931.

The MINISTER OF AGRICULTURE.

OTTAWA
F. A. ACLAND
PRINTER TO THE KING'S MOST EXCELLENT MAJESTY
28570 1931

2nd Session, 17th Parliament, 21-22 George V, 1931

THE HOUSE OF COMMONS OF CANADA.

BILL 87.

An Act to amend the Root Vegetables Act.

R.S., c. 181; 1929, c. 7.

HIS Majesty, by and with the advice and consent of the Senate and House of Commons of Canada, enacts as follows:—

Marking of packages.

1. Section six of the *Root Vegetables Act*, chapter one hundred and eighty-one of the Revised Statutes of Canada, 1927, is repealed.

2. Section nineteen of the said Act is repealed and the following is substituted therefor:—

Vegetables excepted from operation of Act.

"**19.** The provisions of this Act shall not apply

(a) to certified seed potatoes as defined in the regulations under the *Destructive Insect and Pest Act;*

(b) to what are commonly termed "green onions"; or

(c) to any potatoes or onions for export where compliance with the said provisions would prevent the sale or export of such potatoes or onions to any foreign market."

Explanatory Notes.

1. The section to be repealed reads as follows:—

"**6.** Every person who by himself or through the agency of another person offers for sale or sells potatoes or onions by the bag, closed barrel or closed crate or in bulk in car lots shall mark the initials of his christian names and his full surname and address or, in the case of a firm or corporation, the firm or corporate name and address, and the grade of the potatoes or onions as prescribed by this Act in a plain and indelible manner, before the package is taken from the place where it is packed, if the potatoes or onions

(a) are offered for sale packed in bags, on a suitable tag attached to each bag;

(b) are sold or offered for sale packed in closed barrels or closed crates, on each barrel in letters not less than three-quarters of an inch in length, and on each crate in letters not less than one-half inch in length;

(c) are sold or offered for sale in bulk in car lots, on the invoice or bill of lading covering each car lot, and in addition to the particulars aforesaid there shall be marked in a clear manner upon the said invoice or bill of lading the number of the car and the words, initials or other description marked on the car indicating by whom the car is owned or controlled and the date of shipment of car.

2. The grade and other marks used may be accompanied by any other designation or brand if that designation or brand is not inconsistent with or marked more conspicuously than the said grade or other marks."

The section quoted above provides specifically for the marking of packages which contain potatoes and onions. Provisions for this are already made under Section 3 *(d)* of the Act.

2. Section nineteen is being amended by repealing paragraph *(a)* of the section as it now stands and in consequence re-lettering *(b)*, *(c)* and *(d)* as *(a)*, *(b)* and *(c)* in the new section.

Paragraph to be repealed reads as follows:—

"**19.** The provisions of this Act shall not apply

(a) to new potatoes when shipped between the first day of June and the thirtieth day of September, both dates inclusive;"

Second Session, Seventeenth Parliament, 21-22 George V, 1931

THE HOUSE OF COMMONS OF CANADA.

BILL 88.

An Act respecting Dominion Agricultural Credit Company, Limited.

First reading, June 12, 1931.

The MINISTER OF FINANCE.

OTTAWA
F. A. ACLAND
PRINTER TO THE KING'S MOST EXCELLENT MAJESTY
29495 1931

89.

Second Session, Seventeenth Parliament, 21-22 George V, 1931

THE HOUSE OF COMMONS OF CANADA.

BILL 89.

An Act to amend the Trust Companies Act.

First reading, June 12, 1931.

The MINISTER OF FINANCE.

OTTAWA
F. A. ACLAND
PRINTER TO THE KING'S MOST EXCELLENT MAJESTY
29487 1931

2nd Session, 17th Parliament, 21-22 George V, 1931

THE HOUSE OF COMMONS OF CANADA.

BILL 89.

An Act to amend the Trust Companies Act.

R.S., c. 29.

HIS Majesty, by and with the advice and consent of the Senate and House of Commons of Canada, enacts as follows:—

1. Subsection three of section sixty-nine of the *Trust Companies Act*, chapter twenty-nine of the Revised Statutes of Canada, 1927, is repealed and the following is substituted therefor:—

Limitation of amount.

"(3) The aggregate of the sums of money borrowed and of money entrusted to the company for investment, the repayment of which is guaranteed by the company, shall not exceed seven times the amount of the company's unimpaired paid-up capital and reserve."

Explanatory Note.

1. Section sixty-nine at present reads as follows:—(Subsection three is amended by substituting the underlined word "seven" for the word "five" in italics below.)

"**69.** For the purpose of carrying out the objects and powers of the company as authorized by section sixty-two of this Act or such of them as the company may be authorized to exercise, and for no other purpose, the directors of the company may, if authorized by by-law, sanctioned by a vote of not less than two-thirds of the amount of the paid-up capital stock of the company, represented at a general meeting duly called for that purpose,

(a) borrow money upon the credit of the company;

(b) hypothecate, mortgage or pledge the real or personal property of the company, or both, to secure any money borrowed under the authority of this section.

2. The company shall not borrow money by the issue of bonds or debentures.

3. The aggregate of the sums of money borrowed and of money entrusted to the company for investment, the repayment of which is guaranteed by the company, shall not exceed *five* times the amount of the company's unimpaired paid-up capital and reserve.

4. The preceding subsection shall apply to every trust company whensoever incorporated by Act of the Parliament of Canada or by letters patent issued under authority of any Act of the said Parliament."

The effect of the amendment in the present Bill is to increase the limit on the amount of money borrowed and received from the public in trust for investment from five times to seven times the combined paid capital and reserve.

Second Session, Seventeenth Parliament, 21-22 George V, 1931

THE HOUSE OF COMMONS OF CANADA.

BILL 95.

An Act to incorporate The Soldiers' Aid Society.

First reading, June 16, 1931.

(PRIVATE BILL.)

Mr. SULLIVAN.

OTTAWA
F. A. ACLAND
PRINTER TO THE KING'S MOST EXCELLENT MAJESTY
29871 1931

2nd Session, 17th Parliament, 21-22 George V, 1931

THE HOUSE OF COMMONS OF CANADA

BILL 95.

An Act to incorporate The Soldiers' Aid Society.

Preamble.

WHEREAS it is desirable to provide for the assistance in case of need, of the Canadian veterans of the Great War, of their wives, children and dependent relatives: And whereas money should be raised for the said purpose and it is desirable to provide for administration of the same and that the same shall be raised in a manner authorized by law: Therefore His Majesty, by and with the advice and consent of the Senate and House of Commons of Canada, enacts as follows:

Incorporation.

1. Arthur Wellesley De Wolf, Captain, Arthur Robert Baldock, business man, P. E. Leclerc, Major, R. M. Tanguay, Major, and John Joseph MacDonald, manufacturers' agent, all of the city of Montreal, in the province of Quebec, together with such other persons as become members of the Society hereby incorporated are incorporated under

Corporate name.

the name of "The Soldiers' Aid Society," hereinafter called "the Society".

Head office.

2. (1) The head office of the Society shall be in the city of Ottawa in the province of Ontario.

Notice of Change.

(2) Notice in writing shall be given by the Society of any change in the head office to the Secretary of State, and a copy of such notice shall be published in the *Canada Gazette*.

Objects.

3. The objects of the Society shall be to receive, collect, administer and distribute certain moneys hereinafter mentioned, for the assistance of the Canadian veterans of the Great War, their wives, children and dependents, resident in Canada.

Powers.

4. The Society shall, under the provisions of this Act, have power throughout Canada, subject to the approval of the Attorney General of each province:

(a) to promote the welfare of the Canadian veterans of the Great War;

(b) to print, establish, distribute and offer for sale lottery tickets, and grant prizes in cash to the winners thereof, notwithstanding any provision of the *Criminal Code*, chapter thirty-six of the Revised Statutes of Canada 1927, or any other statute of Canada, and, incidental and auxiliary thereto, to acquire property, printing presses and generally to engage in the printing business.

Borrowing powers.

5. (1) The Society may, from time to time, for the purposes of the Society:

(a) borrow money upon the credit of the Society;

(b) limit or increase the amount to be borrowed;

(c) make, draw, accept, endorse or become party to promissory notes and bills of exchange; every such note or bill made, drawn, accepted or endorsed by the party thereto authorized by the by-laws of the Society and countersigned by the proper party thereto authorized by the said by-laws, shall be binding upon the Society and shall be presumed to have been made, drawn, accepted or endorsed with proper authority until the contrary is shown; and it shall not be necessary in any case to have the seal of the Society affixed to any such note or bill;

(d) mortgage, hypothecate or pledge any property of the Society, real or personal, to secure the repayment of any money borrowed for the purposes of the Society;

Limitation.

(2) Nothing in this section shall be construed to authorize the Society to issue any note or bill payable to bearer thereof, or any promissory note intended to be circulated as money or as the note or bill of a bank, or to engage in the business of banking or insurance.

Capital Stock.

6. The capital stock of the Society shall consist of five thousand shares without nominal or par value, to be issued and allotted under such terms and conditions and for such consideration as may be fixed by the directors of the Society.

Profits.

7. The net profits shall be distributed on the following basis; eighty-two per cent to be distributed to the various veteran organizations in Canada, with the proviso that they shall take care of other veterans, who are not members of any organization. The remaining eighteen per cent shall be used by the Society for administration purposes.

Veteran Association defined.

8. The Veteran Association shall mean and include any association or society incorporated under the laws of Canada or of any province and composed of persons who have been engaged on active service during a state of war in any of His Majesty's forces.

Audited accounts.

9. The accounts of the Society shall be audited after the determination of each lottery and may, at any time, be audited by any auditor which the Secretary of State may appoint for that purpose and, in such case, the expenses of such audit as fixed by the Secretary of State shall be reimbursed to him on demand by the Society.

Second Session, Seventeenth Parliament, 21-22 George V, 1931

THE HOUSE OF COMMONS OF CANADA.

BILL 96.

An Act respecting the International Convention for the Safety of Life at Sea signed in London on the thirty-first day of May, 1929, and the International Convention respecting Load Lines signed in London on the fifth day of July, 1930.

First reading, June 16, 1931.

The MINISTER OF MARINE.

OTTAWA
F. A. ACLAND
PRINTER TO THE KING'S MOST EXCELLENT MAJESTY
28835 1931

2nd Session, 17th Parliament, 21-22 George V, 1931

THE HOUSE OF COMMONS OF CANADA

BILL 96.

An Act respecting the International Convention for the Safety of Life at Sea signed in London on the thirty-first day of May, 1929, and the International Convention respecting Load Lines signed in London on the fifth day of July, 1930.

HIS Majesty, by and with the advice and consent of the Senate and House of Commons of Canada enacts as follows:—

Short title.

1. This Act may be cited as *The Safety of Life at Sea and Load Line Conventions Act, 1931.*

Conventions confirmed and sanctioned.

2. The Convention, known as the International Convention for the Safety of Life at Sea, signed at London on the 31st day of May, 1929, (in this Act referred to as the Safety Convention), and set out in Schedule I to this Act, and the Convention, known as the International Convention respecting Load Lines, signed at London on the 5th day of July, 1930, (in this Act referred to as the Load Line Convention), and set out in Schedule II to this Act, are hereby confirmed and sanctioned, and the provisions of the said Conventions shall have the force of law.

Ships on lakes and rivers.

3. This Act shall not apply to ships while engaged on voyages between Canada and the United States of America on any lakes or rivers.

Regulations.

4. (1) The Governor in Council may make such regulations as may be necessary to give effect to the provisions of the said Conventions. Such regulations shall conform in all respects to the requirements of the said Conventions, and shall have the same force and effect as if enacted herein.

Offence and penalty.

(2) Every person who contravenes any regulation made by the Governor in Council under this section shall be guilty of an offence and shall be liable, upon summary conviction, to a penalty not exceeding five hundred dollars and costs.

Explanatory Notes

The purpose of this Bill is to give authority for the ratification of two international conventions, the first one The International Convention for the Safety of Life at Sea, 1929, and the second one, an International Convention respecting Load Lines, 1930, and to prescribe penalties for infraction thereof.

The purpose of these conventions, which were signed by the representatives of all the leading maritime nations of the world, including Canada, is to secure uniform practice and regulations for the Safety of Life at Sea.

The main points covered by the conventions are as follows:—

(1) Safety Convention:

(a) The subdivision of the hulls of ships into watertight compartments, so arranged that in the event of accident, the flooding of a ship will be localized and she will thereby, under normal circumstances, be enabled to keep afloat until assistance can be secured;

(b) The provision of a sufficient number of life-boats and competent lifeboat men to man them, life jackets and life saving appliances adequate for all on board;

(c) The equipment of ships with radio apparatus manned with qualified radio operators so that a ship may call for assistance or receive such calls from other ships.

(d) The maintenance of a patrol in the North Atlantic for reporting of icebergs and destroying derelicts.

(e) The safety of navigation generally.

(2) Load Line Convention:

(a) The marking of "load lines" on the side of the ships indicating the maximum depth to which they may be loaded, the purpose being to protect passengers and crews of ships, more particularly the crews of cargo ships from the risk incident to overloading.

(b) Division of the world into zones and the fixing of the depth to which ships may be loaded when undertaking voyages in the various zones, in both summer and winter.

The provisions of both Conventions are limited to ships engaged on international ocean voyages; that is from a port in one country to a port in another country. The Conventions do not apply to ships plying on the Great Lakes.

Safety Certificate and Exemption Certificate, R.S., c. 186.

5. A Safety Certificate or a Safety Certificate and an Exemption Certificate, in the form shown in Schedule I to this Act, shall be issued, instead of the certificate Form S, in Schedule A of the *Canada Shipping Act*, to any passenger ship to which the said Schedule I applies.

Inspections.

6. (1) Any inspections required under the provisions of this Act or under the provisions of the said Conventions in respect of the hulls, boilers, machinery, equipment, or appliances, other than radio equipment, of ships, shall be made by inspectors appointed under the provisions of Part VII of the *Canada Shipping Act*, or, in the case of radio equipment inspections, by Radio Inspectors authorized by the Minister of Marine for that purpose.

R.S., c. 186.

Corporations for the survey of registry may assign load lines, and issue certificates.

(2) The Governor in Council may authorize, subject to such conditions as he may deem fit, any corporation or society for the survey or registry of ships approved by the Minister of Marine, to assign load lines to ships, to inspect ships in respect of load lines and to issue Load Line Certificates.

Issue of Certificates.

7. Safety Certificates, and Exemption Certificates, as described in the Safety Convention, and Load Line Certificates, as described in the Load Line Convention, except as herein otherwise provided, shall be issued under the seal of the Minister of Marine, when, on receipt of reports of inspection, the Chairman, Board of Steamboat Inspection, is satisfied that all the provisions of this Act, and of the *Canada Shipping Act*, applicable in any particular case, have been complied with.

R.S., c. 186.

Issue of Radiotelegraphy Certificates.

8. Safety Radiotelegraphy Certificates, as described in the Safety Convention, shall be issued by Radio Inspectors duly authorized therefor by the Minister of Marine.

Ships not to proceed without Certificates.

9. (1) No ship registered in Canada or in any other country which has ratified the Safety Convention shall proceed or attempt to proceed to sea on an international voyage from a port or place in Canada after the 30th June, 1932, unless she has on board such Safety Certificate, Exemption Certificate applicable to the voyage on which she is about to proceed, and Safety Radiotelegraphy Certificate as are prescribed in Chapter VI of the said Convention.

Penalty.

(2) Any ship which proceeds or attempts to proceed to sea in contravention of any of the provisions of this section shall be detained by a Collector or other officer of Customs until such certificates as she is required by the said Convention to have on board are produced to such officer, and the Master or owner of the ship shall be liable, upon summary conviction, to a penalty not exceeding one thousand dollars and not less than one hundred dollars.

5. Certificate Form S, in Schedule A of the Canada Shipping Act reads as follows:

"FORM S.

DOMINION OF CANADA—DEPARTMENT OF MARINE AND FISHERIES.

CERTIFICATE *of the Inspector of Hulls and Equipment for a Steamboat to carry Passengers or for a Freight boat of or over 150 tons gross.*

Having examined the hull and equipment of the steamboat of whereof of owner, on this day of A.D. 19 , the particulars of her gross and registered tonnage as shown on her certificate of registry, being as follows:—

	Tons.
Tonnage under tonnage deck	
House on deck	"
Gross tonnage	"
Deduct for engine-room	"
Register tonnage	"

I, , inspector of hulls and equipment, do hereby certify that her hull is in all respects staunch, seaworthy and in good condition for navigation; that the equipment of the vessel throughout is in conformity with the requirements of Part VII of the Canada Shipping Act respecting steamboat inspection, the said steamboat having on board, properly placed and in good order for immediate service, boats having (together) a carrying capacity for persons, life-boats having (together) a carrying capacity for persons, life-preservers, wooden floats, fire buckets, axes, lanterns, life-buoy, having a proper heaving line attached; and that she has the fire-pumps, hose and other appliances for extinguishing fire required by said Part and placed as therein provided, and in every way efficient and according to the requirements of the said Part; and I further certify that the said steamboat is permitted to run on the waters between and *(or* to run in any of the waters in Canada *as the case may be)* from this day to the day of , 19 , and that she is adapted and fit to carry *(number)* passengers and no more *(as the case may be).*

Dated at
this day
of 19

Inspector of Hulls and Equipment.

CERTIFICATE *of the Inspector of Boilers and Machinery for the same boat.*

And I, , the inspector of boilers and machinery, do hereby certify that the engine, boiler and machinery of the steamboat are sufficient and suitable to authorize her being lawfully employed* without hazard to life on the route between and [*or* in any of the waters in Canada, *as the case may be*] from this day of to the day of , 19 .

That the engine of the said steamboat is of nominal horse-power, and that her boiler can carry with safety pounds of steam pressure per square inch, and no more.

Date at
this day
of 19 .

Inspector of Boilers and Machinery.

(*Here insert "in the carriage of passengers" or "as a freight boat" or "as a ferry boat," as the case may be.)

NOTE.—The original copy of this certificate to be posted on board."

Ships not to proceed without Load Line Certificate.

10. (1) No ship registered in Canada or in any other country which has ratified the Load Line Convention shall proceed or attempt to proceed to sea on an international voyage from a port or place in Canada after the 30th June, 1933, unless she has on board a Load Line Certificate as provided in the said Convention.

Penalty.

(2) Any ship which proceeds or attempts to proceed to sea in contravention of any of the provisions of this section shall be detained by a Collector or other officer of Customs until such certificates as she is required by the said Convention to have on board are produced to such officer, and the Master or owner of the ship shall be liable, upon summary conviction, to a penalty not exceeding five hundred dollars and not less than one hundred dollars.

Canadian Ships not to proceed if load line is or will become submerged contrary to Convention.

11. (1) No ship registered in Canada shall proceed or attempt to proceed to sea on an international voyage from a port or place in Canada or from a port or place outside of Canada after the 30th June, 1933, so loaded that any load line is, or during the course of the voyage will become, submerged contrary to the provisions of the Load Line Convention.

Penalty, port or place in Canada.

(2) Any ship which proceeds or attempts to proceed to sea from a port or place in Canada in contravention of any of the provisions of this section shall be detained by a Collector or other officer of Customs, and the Master or owner thereof shall be liable, upon summary conviction, to a penalty not exceeding five hundred dollars and not less than one hundred dollars.

Penalty, port or place outside of Canada.

(3) The Master or owner of any ship which proceeds or attempts to proceed to sea from a port or place outside of Canada in contravention of any of the provisions of this section shall be liable, upon summary conviction, to a penalty not exceeding five hundred dollars and not less than one hundred dollars.

Ship registered outside of Canada, if load line is or will become submerged.

12. (1) No ship registered in a country other than Canada which has ratified the Load Line Convention shall proceed or attempt to proceed to sea on an international voyage from a port or place in Canada after the 30th June, 1933, so loaded that any load line is, or during the course of the voyage will become, submerged contrary to the provisions of the said Convention.

Ship to be detained.

(2) Any ship which proceeds or attempts to proceed to sea in contravention of any of the provisions of this section shall be detained by a Collector or other officer of Customs until such provisions have been complied with.

Ship registered in a country which has not ratified the safety Convention.

13. (1) Subject to the provisions of this section no ship registered in a country which has not ratified the Safety Convention shall proceed or attempt to proceed to sea on an international voyage from a port or place in Canada after the 30th June, 1932, until such ship has complied with such provisions of this Act and of the said Convention as apply to ships registered in Canada.

Ship registered in a country which has not ratified the Load Line Convention.

(2) Subject to the provisions of this section no ship registered in a country which has not ratified the Load Line Convention shall proceed or attempt to proceed to sea on an international voyage from any port or place in Canada after the 30th June, 1933, until such ship has complied with such provisions of this Act and of the said Convention as apply to ships registered in Canada.

Minister may authorize clearance.

(3) The Minister of Marine may authorize the clearance of any ship to which this section applies upon the following conditions:—*(a)* That no passengers be carried; *(b)* That only such amount of cargo be carried, as in the opinion of a Port Warden or other competent person directed by the Minister to examine the ship, is sufficient to allow the ship to make a voyage in safety, and, *(c)* That, in the opinion of an Inspector, the hull, boilers, machinery and equipment of such ship are in good order and sufficient for the voyage contemplated.

Conditions.

Ship to be detained.

(4) Any ship which proceeds or attempts to proceed to sea in contravention of any of the provisions of this section shall be detained by a Collector or other officer of Customs until such provisions have been complied with.

Inspector, etc., may go on board.

14. An Inspector of Hulls and Equipment or a Collector of Customs or any person directed by the Minister of Marine may go on board any ship at all reasonable times for the purpose of satisfying himself that the provisions of the Load Line Convention are being complied with, and shall have authority to detain any such ship which has failed to comply with any of the provisions of the said Convention.

Ship may be detained.

SCHEDULE I

INTERNATIONAL CONVENTION FOR THE SAFETY OF LIFE AT SEA, 1929

PREAMBLE

The Governments of Germany, the Commonwealth of Australia, Belgium, Canada, Denmark, Spain, the Irish Free State, the United States of America, Finland, France, the United Kingdom of Great Britain and Northern Ireland, India, Italy, Japan, Norway, the Netherlands, Sweden, the Union of Socialist Soviet Republics; being desirous of promoting safety of life at sea by establishing in common agreement uniform principles and rules directed thereto;

Considering that this end may best be achieved by the conclusion of a Convention;

Have appointed their Plenipotentiaries, namely:

The Government of Germany:

Dr. Friedrich STHAMER, Ambassador Extraordinary and Plenipotentiary of the German Reich in London.

Mr. Gustav KOENIGS, Ministerialdirigent in the Reichsverkehrsministerium, Geheimer Regierungsrat, Berlin.

Mr. Arthur WERNER, Oberregierungsrat in the Reichsverkehrsministerium, Geheimer Justizrat, Berlin.

Mr. Walter LAAS, Professor, Director of the "Germanischer Lloyd" Classification Society, Berlin.

Dr. Otto RIESS, Director ret. of the Reichsschiffsvermessungsamt, Geheimer Regierungsrat, Neubrandenburg.

Mr. Herman GIESS, Ministerialrat in the Reichspostministerium, Berlin.

Vice-Admiral Hugo DOMINIK, President of the "Deutsche Seewarte," Hamburg.

The Government of the Commonwealth of Australia:

Captain Henry James FEAKES, Royal Australian Navy, Commonwealth Naval Representative in London.

Lieut-Commander Thomas FREE, Royal Naval Reserve (Retired).

Captain J. K. DAVIS, Commonwealth Director of Navigation.

The Government of Belgium:

Baron DE GERLACHE DE GOMERY, Director-General of the Marine Department.
Mr. Gustave DE WINNE, Ingénieur en Chef, Director of the Marine Department.
Mr. Georges GOOR, Adviser to the Marine Department.

The Government of Canada:

Mr. Alexander JOHNSTON, Deputy Minister of Marine.
Mr. Lucien PACAUD, Secretary in the Office of the Canadian High Commissioner in London.

The Government of Denmark:

Mr. Emil KROGH, Assistant-Secretary in the Marine Department, Ministry of Industry, Commerce and Shipping.
Mr. V. TOPSÖE-JENSEN, Judge of the Supreme Court of Appeal.
Captain V. LORCK, Chief Examiner of Masters and Mates.
Mr. J. A. KÖRBING, Technical Managing Director of the United Steam Ship Company, Copenhagen.
Mr. Aage H. LARSEN, Engineer in Chief of the Ministry of Industry, Commerce and Shipping.
Mr. Arnold POULSEN, Engineer Commissioner to the Ministry of Industry, Commerce and Shipping.

The Government of Spain:

Rear-Admiral Don Francisco Javier de SALAS y Gonzalez, Head of the Naval Commission in Europe.

The Government of the Irish Free State:

Mr. J. W. DULANTY, Commissioner for Trade for the Irish Free State in Great Britain.
Mr. E. C. FOSTER, Chief Surveyor in the Marine Branch, Department of Industry and Commerce.

The Government of the United States of America:

The Honourable Wallace H. WHITE, Junior, Member of Congress, Chairman of the Committee on Merchant Marine and Fisheries.
Mr. Arthur J. TYRER, Commissioner of Navigation, Department of Commerce.
Mr. Charles M. BARNES, Chief of the Treaty Division, Department of State.
Rear-Admiral George H. ROCK, Construction Corps, United States Navy, Assistant Chief of the Bureau of Construction and Repair, Navy Department.

Captain Clarence S. KEMPFF, United States Navy, Hydrographer, Navy Department.
Mr. Dickerson N. HOOVER, Supervising Inspector-General of the Steamboat Inspection Service, Department of Commerce.
Mr. William D. TERRELL, Chief of the Radio Division, Department of Commerce.
Rear-Admiral John G. TAWRESEY, Construction Corps, United States Navy (Retired), United States Shipping Board.
Mr. Herbert B. WALKER, President of the American Steamship Owners' Association.
Mr. Henry G. SMITH, President of the National Council of American Shipbuilders.
Captain Charles A. MCALLISTER, President of the American Bureau of Shipping.

The Government of Finland:

Baron Gustaf WREDE, President of the Shipping Board.
Captain Väinö BERGMAN, Inspector of Shipping.
Consul Karl KURTEN, Manager of the Finnish Shipowners' Association.

The Government of France:

Mr. RIO, Senator, and former Minister.
Captain HAARBLEICHER, Naval Construction Corps, Director of Mercantile Shipping Service, Department of Public Works.
Commander MARIE, Naval Construction Corps, Direction of Mercantile Shipping.
Captain THOUROUDE, Naval Attaché to the French Embassy in London.

The Government of the United Kingdom of Great Britain and Northern Ireland:

Sir Herbert W. RICHMOND, Vice-Admiral, Royal Navy.
Sir Westcott ABELL, Professor of Naval Architecture, Armstrong College, Newcastle-on-Tyne.
Mr. A. L. AYRE, Vice-President of the Shipbuilding Employers' Federation.
Captain F. W. BATE, Professional Officer, Mercantile Marine Department, Board of Trade.
Mr. C. H. BOYD, Mercantile Marine Department, Board of Trade.
Sir William C. CURRIE, President of the Chamber of Shipping of the United Kingdom.
Mr. A. J. DANIEL, Principal Ship Surveyor, Board of Trade.
Sir Norman HILL, Chairman of the Merchant Shipping Advisory Committee.

Sir Charles HIPWOOD, Principal Assistant Secretary, Mercantile Marine Department, Board of Trade.
Captain A. R. H. MORRELL, Trinity House.

The Government of India:

Sir Geoffrey L. CORBETT, Commerce Department, Government of India.
Captain E. V. WHISH, Port Officer, Bombay.
Mr. M. A. MASTER, General Manager of the Scindia Steam Navigation Company.

The Government of Italy:

Lieut-General of Port G. INGIANNI, General Director of the Mercantile Marine.
Vice-Admiral A. ALESSIO, Chief of the Technical Inspectorate of the Mercantile Marine.
Count D. ROGERI DI VILLANOVA, Counsellor to the Italian Embassy in London.
Dr. T. C. GIANNINI, Counsellor of Emigration.
Major-General of Port F. MARENA, Vice-Inspector of Harbour Master Offices.
Engineer-General E. FERRETTI, Chief of the Technical Office of the Italian Naval and Aeronautical Register.
Mr. G. GNEME, Chief of the Telegraph Service of the General Direction of Postal and Telegraphic Services.
Commander L. BIANCHERI, Royal Italian Navy.

The Government of Japan:

Mr. Yukio YAMAMOTO, Inspector-General of the Mercantile Marine Bureau, Expert in the Department of Communications.
Captain Shichihei OTA, Imperial Japanese Navy.
Mr. Itaro ISHII, First Class Secretary of Embassy.

The Government of Norway:

Mr. B. VOGT, Norwegian Minister in London.
Mr. L. T. HANSEN, Director of the Department of Shipping, Ministry of Commerce and Navigation.
Mr. J. SCHÖNHEYDER, Surveyor-in-Chief of the Ship and Engineer Division, Ministry of Commerce and Navigation.
Mr. Arth H. MATHIESEN, Vice-President of the Norwegian Shipowners' Association.
Captain N. MARSTRANDER, Chairman of the Board of the Norwegian Masters' Association.
Mr. A. BIRKELAND, Manager of the Norwegian Seamen's and Firemen's Union.

The Government of the Netherlands:

Vice-Admiral C. FOCK, Inspector-General of Navigation.
Mr. C. H. de GOEJE, Ex-Inspector-General of Navigation, Netherland East Indies.
Mr. A. VAN DRIEL, Adviser on Naval Architecture, Shipping Inspection Service.
Mr. J. A. BLAND van den BERG, Inspector of Coastal and Ships' Radiotelegraphy.
Mr. Phs. van OMMEREN, Junior, Chairman of Phs. van Ommeren, Ltd.
Mr. H. G. J. UILKENS, Ex-Commodore of the Netherland Steamship Company.

The Government of Sweden:

Baron PALMSTIERNA, Swedish Minister in London.
Mr. Nils Gustaf NILSSON, Assistant Under-Secretary in the Board of Trade.
Captain Erik Axel Fredrik EGGERT, Maritime Expert to the Social Board.

The Government of the Union of Socialist Soviet Republics:

Mr. Jan. LVOVITCH ARENS, Counsellor to the U.S.S.R. Embassy in Paris.
Captain Karl Pavlovitch EGGI, Commander of the Icebreaker "Lenin," Soviet Merchant Fleet (Sovtorgflot).

Who, having communicated their full powers, found in good and due form, have agreed as follows:

CHAPTER I.—PRELIMINARY

ARTICLE 1

The Contracting Governments undertake to give effect to the provisions of the present Convention for the purpose of promoting safety of life at sea, to promulgate all regulations and to take all other steps which may be necessary to give the present Convention full and complete effect.

The provisions of the present Convention are completed by Regulations contained in Annex I, which have the same force and take effect at the same time as the present Convention. Every reference to the present Convention implies at the same time a reference to the Regulations annexed thereto.

Article 2

Applications and Definitions

1. The provisions of the present Convention shall apply to ships belonging to countries the Governments of which are Contracting Governments, and to ships belonging to territories to which the present Convention is applied under Article 62, as follows:

Chapter II.—(*Construction*) to passenger ships (mechanically propelled) on international voyages.

Chapter III.—(*Life-saving Appliances*) to passenger ships (mechanically propelled) on international voyages.

Chapter IV.—(*Radiotelegraphy*) to all ships engaged on international voyages except cargo ships of less than 1,600 tons gross tonnage.

Chapter V.—(*Safety of Navigation*) to all ships on all voyages.

Chapter VI.—(*Certificates*) to all the ships to which Chapters II, III and IV apply.

2. The classes of ships to which each Chapter applies are more precisely defined, and the extent of the application is shown, in each Chapter.

3. In the present Convention, unless expressly provided otherwise—

(*a*) a ship is regarded as belonging to a country if it is registered at a port of that country;

(*b*) the expression "Administration" means the Government of the country in which the ship is registered;

(*c*) an international voyage is a voyage from a country to which the present Convention applies to a port outside such country, or conversely; and for this purpose every colony, overseas territory, protectorate or territory under suzerainty or mandate is regarded as a separate country;

(*d*) a ship is a passenger ship if it carries more than 12 passengers ;

(*e*) the expression "Regulations" means the Regulations contained in Annex I.

4. The present Convention, unless expressly provided otherwise, does not apply to ships of war.

Article 3

Cases of Force Majeure

No ship, which is not subject to the provisions of the present Convention at the time of its departure on any voyage, shall become subject to the provisions of the present

Convention on account of any deviation from its intended voyage due to stress of weather or any other cause of *force majeure*.

Persons who are on board a ship by reason of *force majeure* or in consequence of the obligation laid upon the master to carry shipwrecked or other persons shall not be taken into account for the purpose of ascertaining the application to a ship of any provisions of the present Convention.

CHAPTER II.—CONSTRUCTION

ARTICLE 4

Application

1. This Chapter, except where it is otherwise expressly provided, applies to new passenger ships engaged on international voyages.

2. A new passenger ship is a ship the keel of which is laid on or after the 1st July, 1931, or a ship which is converted to passenger service on or after that date, all other passenger ships being described as existing passenger ships.

3. Each Administration may, if it considers that the route and the conditions of the voyage are such as to render the application of the requirements of this Chapter unreasonable or unnecessary, exempt from the requirements of this Chapter individual ships or classes of ships belonging to its country which, in the course of their voyage, do not proceed more than 20 miles from the nearest land.

4. In the case of a passenger ship which, in the course of its voyage, does not proceed more than 200 miles from the nearest land, the Administration of the country to which the ship belongs may allow relaxations from such of the requirements of Regulations IX, X, XV and XIX as may be proved to the satisfaction of the Administration to be neither reasonable nor practicable.

5. In the case of existing passenger ships engaged on international voyages which do not already comply with the provisions of this Chapter relating to new passenger ships, the arrangements on each ship shall be considered by the Administration of the country to which the ship belongs, with a view to improvements being made to provide increased safety where practicable and reasonable.

6. In the case of passenger ships engaged on international voyages which are employed in the carriage of large numbers of unberthed passengers in special trades, such, for example, as the pilgrim trade, an Administration, if satisfied that it is impracticable to enforce compliance with the requirements of this Chapter, may exempt such ships, when

they belong to its country, from those requirements on the following conditions:—

(*a*) That the fullest provision which the circumstances of the trade will permit shall be made in the matter of construction.

(*b*) That steps shall be taken to formulate general rules which shall be applicable to the particular circumstances of these trades. Such rules shall be formulated in concert with such other Contracting Governments, if any, as may be directly interested in the carriage of such passengers.

7. This Chapter does not apply to ships which are not mechanically propelled or to wooden ships of primitive build, such as dhows, junks, etc.

Article 5

Watertight Subdivision of Ships

1. Ships shall be as efficiently subdivided as is possible having regard to the nature of the service for which they are intended. The requirements respecting subdivision are given in the following Articles and in the Regulations.

2. The degree of subdivision provided for by these requirements varies with the length of the ship and with the service, in such manner that the highest degree of subdivision corresponds with the ships of greatest length primarily engaged in the carriage of passengers.

3. Regulations I to V indicate the method to be followed in order to determine the degree of subdivision applicable to a ship.

4. In order that the required degree of subdivision shall be maintained, a loadline corresponding to the approved subdivision draft shall be assigned and marked on the ship's sides. A ship having spaces which are specially adapted for the accommodation of passengers and the carriage of cargo alternatively may, if the owners desire, have one or more additional loadlines assigned and marked to correspond with the subdivision drafts which the Administration may approve for the alternative service conditions. The freeboard corresponding to each approved subdivision loadline, and the conditions of service for which it is approved, shall be clearly indicated on the Safety Certificate. Subdivision loadlines shall be marked and recorded in the manner provided in Regulation VII.

ARTICLE 6

Peak and Machinery Space Bulkheads, Shaft Tunnels, etc.

All ships shall be fitted with watertight forward and after peak bulkheads and with watertight bulkheads at the extremities of the machinery space, and, in screw ships, with watertight shaft tunnels or equivalent subdivision in accordance with the provisions of Regulation VI.

ARTICLE 7

Construction, Testing, etc.

Regulations VIII to XIII and XV to XXI prescribe rules for—

(*a*) the construction and testing of subdivision bulkheads, inner bottoms, water-tight decks, trunks, ventilators, fire-resisting bulkheads, etc.;

(*b*) the conditions governing openings in bulkheads, in the ship's sides and in the weather deck, and the character and use of means which shall be provided for closing these openings;

(*c*) the tests and the periodical inspections and operation of the means of closing openings in bulkheads and in the ship's side;

(*d*) exits from watertight compartments;

(*e*) pumping arrangements; and

(*f*) power for going astern and auxiliary steering apparatus.

ARTICLE 8

Stability Test

Every new passenger ship shall be inclined upon its completion and the elements of its stability determined. The operating personnel shall be supplied with such information on this subject as is necessary to permit efficient handling of the ship.

ARTICLE 9

Entries in the Official Log Book

A record of the closing and opening of watertight doors, etc., and of all inspections and drills, shall be entered in the official log book as required by Regulation XIV.

ARTICLE 10

Initial and Subsequent Surveys of Ships

The general principles which shall govern the survey of ships, whether new or existing, as regards hull, main and auxiliary boilers and machinery, and equipments, are

stated in Regulation XXII. Each Contracting Government undertakes—

(1) to draw up detailed regulations in accordance with these general principles, or to bring its existing regulations into agreement with these principles;

(2) to secure that these regulations shall be enforced.

The detailed regulations referred to in the preceding paragraph shall be in all respects such as to secure that, from the point of view of safety of life, the ship is fit for the service for which it is intended.

CHAPTER III.—LIFE-SAVING APPLIANCES, ETC.

Article 11

Interpretation

For the purposes of this Chapter—

(*a*) the expression "new ship" means a ship the keel of which is laid on or after the 1st July, 1931, all other ships being described as existing ships;

(*b*) the expression "short international voyage" means an international voyage in the course of which a ship is not more than 200 miles from the nearest land;

(*c*) the expression "buoyant apparatus" means buoyant deck seats, or buoyant deck chairs, or any other buoyant apparatus excepting boats, life-buoys and life-jackets.

Article 12

Application

1. This Chapter, except where it is otherwise expressly provided, applies to new passenger ships which are mechanically propelled and engaged on international voyages.

2. Special provisions are laid down in Articles 13, 14, 19 and 25 with regard to new passenger ships engaged on short international voyages.

3. Each Administration, if it considers that the route and the conditions of the voyage are such as to render the application of the full requirements of this Chapter unreasonable or unnecessary, may to that extent exempt from the requirements of this Chapter individual ships or classes of ships belonging to its country which, in the course of their voyage, do not go more than 20 miles from the nearest land.

4. In the case of existing passenger ships which are mechanically propelled and engaged on international voyages and which do not already comply with the provisions of

this Chapter relating to new passenger ships, the arrangements on each ship shall be considered by the Administration of the country to which the ship belongs, with a view to securing, so far as this is practicable and reasonable, compliance with the general principles set out in Article 13 not later than the 1st July, 1931, and substantial compliance with the other requirements of this Chapter.

5. In the case of passenger ships which are mechanically propelled and engaged on international voyages and which are employed in the carriage of large numbers of unberthed passengers in special trades, such, for example, as the pilgrim trade, an Administration, if satisfied that it is impracticable to enforce compliance with the requirements of this Chapter, may exempt such ships, when they belong to its country, from those requirements on the following conditions:—

(*a*) That the fullest provision which the circumstances of the trade will permit shall be made in the matter of lifeboats and other life-saving appliances and fire protection.

(*b*) That all such boats and apparatus shall be readily available within the meaning of Article 13.

(*c*) That a life-jacket shall be provided for every person on board.

(*d*) That steps shall be taken to formulate general rules which shall be applicable to the particular circumstances of these trades. Such rules shall be formulated in concert with such other Contracting Governments, if any, as may be directly interested in the carriage of such passengers.

Article 13

Lifeboats and Buoyant Apparatus

The general principles governing the provision of lifeboats and buoyant apparatus in a ship to which this Chapter applies are that they shall be readily available in case of emergency and shall be adequate.

1. To be readily available, the lifeboats and buoyant apparatus must comply with the following conditions:—

(*a*) They must be capable of being got into the water safely and rapidly even under unfavourable conditions of list and trim.

(*b*) It must be possible to embark the passengers in the boats rapidly and in good order.

(*c*) The arrangement of each boat and article of buoyant apparatus must be such that it will not interfere with the operation of other boats and buoyant apparatus.

2. To be adequate, the provision of lifeboats and buoyant apparatus must satisfy the following conditions:—

(*a*) Subject to the provisions of sub-paragraph (*b*) of this paragraph there must be accommodation in boats for all persons on board, and there must, in addition, be buoyant apparatus for 25 per cent of the persons on board.

(*b*) In the case of passenger ships engaged on short international voyages, the boats must be provided in accordance with the requirements set out in the table in Regulation XXXIX, and there must be, in addition, buoyant apparatus so that the boats and buoyant apparatus together provide accommodation for all on board as set out in Regulation XXXVIII. There must, in addition, be buoyant apparatus for 10 per cent of the persons on board.

(*c*) No more boats shall be required on any passenger ship than are sufficient to accommodate all persons on board.

ARTICLE 14

Ready Availability and Adequacy

The arrangements for securing the principles of ready availability and adequacy mentioned in Article 13 shall be in accordance with the provisions of Regulations XXXVII, XXXVIII and XXXIX.

ARTICLE 15

Standard types of Boats. Life Rafts. Buoyant Apparatus

All the lifeboats, life rafts and buoyant apparatus shall comply with the conditions fixed by this Convention and Regulations XXIV to XXIX.

ARTICLE 16

Construction of Boats

All boats must be properly constructed, and shall be of such form and proportion that they shall have ample stability in a seaway, and sufficient freeboard when loaded with their full complement of persons and equipment.

Each boat must be of sufficient strength to enable it to be safely lowered into the water when loaded with its full complement of persons and equipment.

ARTICLE 17

Embarkation of the Passengers in the Boats

Suitable arrangements shall be made for embarking the passengers in the boats at an embarkation deck. There shall also be a suitable ladder provided at each set of davits.

ARTICLE 18

Capacity of Boats and Life Rafts

The number of persons that a boat of one of the standard types or an approved life raft or buoyant apparatus can accommodate and the conditions of approval of life rafts and buoyant apparatus shall be ascertained in accordance with the provisions of Regulations XXX to XXXV inclusive.

ARTICLE 19

Equipment of Boats and Life Rafts

Regulation XXXVI prescribes the equipment for boats and life rafts.

ARTICLE 20

Life-jackets and Life-buoys

1. Every ship to which this Chapter applies shall carry for every person on board a life-jacket of a type approved by the Administration, and in addition, unless these life-jackets can be adapted for use by children, a sufficient number of life-jackets suitable for children.

2. Every such ship shall also carry life-buoys of a type approved as aforesaid to the number required by Regulation XL.

3. A life-jacket or life-buoy shall not be approved by an Administration unless it satisfies the requirements of Regulation XL applicable to life-jackets and life-buoys respectively.

4. In this Article the expression "life-jacket" includes any appliance capable of being fitted on the body, having the same buoyancy as a life-jacket.

ARTICLE 21

Means of Ingress and Egress. Emergency Lighting

1. Proper arrangements shall be made for ingress to and egress from the different compartments, decks, etc.

2. Provisions shall be made for an electric or other system of lighting, sufficient for all requirements of safety, in the different parts of the ship, and particularly upon the decks on which the lifeboats are stowed. On ships in which the boat deck is more than 9·15 metres (30 feet) above the waterline at the lightest seagoing draught, provision shall be made for the illumination from the ship of the lifeboats when alongside and in process of or immediately after being launched. There must be a self-contained source capable of supplying, when necessary, this safety lighting system, and placed in the upper parts of the ship above the bulkhead deck.

3. The exit from every main compartment occupied by passengers or crew shall be continuously lighted by an emergency lamp. The power for these emergency lamps shall be so arranged that they will be supplied from the independent installation referred to in the preceding paragraph in the event of failure of the main generating plant.

ARTICLE 22

Certificated Lifeboatmen. Manning of the Boats

1. In every ship to which this Chapter applies there must be, for any boat or life raft carried in order to comply with this Chapter, such number of certificated lifeboatmen as is required by Regulation XLI for that boat.

2. The allocation of the certificated lifeboatmen to each boat and life raft remains within the discretion of the master, according to the circumstances.

3. By "certificated lifeboatmen" is meant any member of the crew who holds a certificate of efficiency issued under the authority of the Administration in accordance with the conditions laid down in the aforementioned Regulation.

4. The manning of the boats shall be as prescribed in Regulation XLII.

ARTICLE 23

Line-Throwing Appliances

Every ship to which this Chapter applies shall carry a line-throwing appliance of a type approved by the Administration.

ARTICLE 24

Dangerous Goods. Fire Protection

1. The carriage, either as cargo or ballast, of goods which by reason of their nature, quantity, or mode of stowage, are, either singly or collectively, liable to endanger the lives of the passengers or the safety of the ship, is forbidden.

This provision does not apply to the ship's distress signals, nor to the carriage of naval or military stores for the public service of the State under conditions authorized by the Administration.

Each Administration shall, from time to time by official notice, determine what goods are to be considered dangerous goods, and shall indicate the precautions which must be taken in the packing and stowage thereof.

2. The arrangements to be made for the detection and extinction of fire shall be as prescribed in Regulation XLIII.

ARTICLE 25

Muster Roll and Drills

Special duties for the event of an emergency shall be allotted to each member of the crew.

The muster list shall show all these special duties and shall indicate, in particular, the station to which each man must go, and the duties that he has to perform.

Before the vessel sails, the muster list shall be drawn up and exhibited, and the proper authority shall be satisfied that the muster list has been prepared for the ship. It shall be posted in several parts of the ship, and in particular in the crew's quarters.

Regulations XLIV and XLV prescribe the conditions under which musters of the crew and drills shall take place.

CHAPTER IV—RADIOTELEGRAPHY

ARTICLE 26

Application and Definition

1. This Chapter applies to all ships engaged on international voyages except cargo ships of less than 1,600 tons gross tonnage.

2. For the purposes of this Chapter a cargo ship means any ship not being a passenger ship.

ARTICLE 27

Fitting of Radio Installation

1. All ships to which this Chapter applies shall, unless exempted under Article 28, be fitted with a radiotelegraph installation complying with the provisions of Article 31, as follows:—

(*a*) All passenger ships, irrespective of size.

(*b*) All cargo ships of 1,600 tons gross tonnage and upwards.

2. Each Administration may delay the application of the provisions of paragraph 1 (*b*) to cargo ships belonging to its country of less than 2,000 tons gross tonnage for a period not exceeding five years from the date of the coming into force of the present Convention.

ARTICLE 28

Exemptions from the Requirements of Article 27

1. Each Administration may, if it considers that the route and the conditions of the voyage are such as to ren-

der a radiotelegraph installation unreasonable or unnecessary, exempt ships belonging to its country from the requirements of Article 27 as follows:—

I. *Passenger ships*

(*a*) Individual passenger ships or classes of passenger ships which, in the course of their voyage, do not go more than—

(i) 20 miles from the nearest land;

or

(ii) 200 miles in the open sea between two consecutive ports.

(*b*) Passenger ships which make voyages entirely within the restricted areas specified in the Annex to this Article.

II.—*Cargo Ships*

Individual cargo ships or classes of cargo ships which, in the course of their voyage, do not go more than 150 miles from the nearest land.

2. Each Administration may, in addition, exempt ships belonging to its country of the following classes:—

I. Barges in tow and existing sailing ships.

An existing sailing ship is one the keel of which is laid before the 1st July, 1931.

II.—Ships of primitive build, such as dhows, junks, etc., if it is practically impossible to fit them with a radiotelegraph installation.

III.—Ships which are not normally engaged on international voyages, but which in exceptional circumstances are required to undertake a single voyage of that kind.

Annex to Article 28

1. The Baltic Sea and approaches thereto East of a line drawn from Utsire (Norway) in the North to Texel (Netherlands) in the South, outside the territorial jurisdiction of the Union of Socialist Soviet Republics.

2. The portions of the Gulf of Tartary and the Sea of Okhotsk covered in voyages between ports in Hokkaido and ports in Japanese Sakhalin.

3. The Chosen (Tyosen) Strait between a line in the North drawn from Kawajiri Misaki (Cape Natsungu) to Fusan, and a line in the South drawn from Nagasaki to Giffard Island (off the South-West point of Quelpart Island) and thence to Tin To (Amherst Island).

4. The Yellow Sea North of Parallel 37° North.

5. The Formosa Strait between a line in the North drawn from Fuki Kaku (Syauki Point) to Foochow and a line in the South drawn from South Cape (the South point of Formosa) to Hong Kong.

6. The area within the following limits:—

Parallel 10° N. from long. 94° E. to the coast of Asia, coast of Asia to Saigon (Cape Tiwan), straight lines between Cape Tiwan, lat. 4° 30′ N. long. 110° E., south point of Palawan Island, Palmas (Miangas) Island, lat. 0° long. 140° E., lat. 0° long. 148° E., lat. 10° S. long. 148° E., Cape York, north coast of Australia from Cape York to Port Darwin (Cape Charles), straight lines between Cape Charles, Ashmore Reef (East Island), lat. 10° S. long. 109° E., Christmas Island, lat. 2° N. long. 94° E., lat. 10° N. long. 94° E., outside the territorial jurisdiction of Australia and of the United States of America.

7. The Caribbean Sea, outside the territorial jurisdiction of the United States of America, in relation to voyages made by sailing ships only.

8. The area of the South Pacific Ocean bounded by the Equator, Meridian 130° W., Parallel 34° S., and the coast of Australia, outside the territorial jurisdiction of Australia.

9. The Tong King Gulf and portions of the China Sea lying to the West of a line drawn from Hong Kong to Lat. 17° N. Long. 110° E., thence due South to Latitude 10° N., and thence West to Saigon.

10. The portions of the Indian Ocean covered in voyages between ports in Madagascar, Reunion and the Mauritius Islands.

11. The portions of the North Atlantic Ocean and Mediterranean Sea covered in voyages between Casablanca (Morocco) and Oran (Algeria) and intermediate ports.

Article 29

Watches

1. *Passenger Ships*

Each passenger ship which, in accordance with Article 27, is required to be fitted with a radiotelegraph installation, shall, for safety purposes, carry a qualified operator, and, if not fitted with an auto-alarm, shall, whilst at sea, keep watches by means of a qualified operator or a certified watcher, as under:—

(*a*) All passenger ships under 3,000 tons gross tonnage, as determined by the Administration concerned;

(*b*) All passenger ships of 3,000 tons gross tonnage and over, continuous watch.

Each Administration is authorized to exempt passenger ships belonging to its country from 3,000 tons to 5,500 tons gross tonnage, both included, from the requirement of a continuous watch for a period not exceeding one year from the date of the coming into force of the present Convention, provided that during the period of such exemption they shall maintain a watch of at least 8 hours per day.

2. *Cargo Ships*

Each cargo ship which, in accordance with Article 27, is required to be fitted with a radiotelegraph installation, shall, for safety purposes, carry a qualified operator, and, if not fitted with an auto-alarm, shall, whilst at sea, keep watches by means of a qualified operator or a certified watcher, as under:—

(*a*) All cargo ships under 3,000 tons gross tonnage, as determined by the Administration concerned;

(*b*) Cargo ships from 3,000 to 5,500 tons gross tonnage, both included, at least 8 hours' watch per day;

(*c*) Cargo ships over 5,500 tons gross tonnage, continuous watch.

Each Administration is authorized to exempt ships belonging to its country included in (*c*) above from the requirement of a continuous watch for a period not exceeding one year from the date of the coming into force of the present Convention, provided that during the period of such exemption they shall maintain a watch of at least 8 hours per day.

Each Administration is also authorized to exempt ships belonging to its country from 5,500 tons to 8,000 tons gross tonnage from the requirement of a continuous watch for a further period of one year, provided that during this further period of exemption they shall maintain a watch of at least 16 hours per day.

3. On all ships fitted with an auto-alarm this auto-alarm shall, whilst the ship is at sea, always be in operation when the operator or watcher is not on watch.

On ships for which the hours of watch are to be determined by the Administration concerned, such watch should be maintained preferably at hours prescribed for radiotelegraph service by the International Radiotelegraph Convention in force.

On ships which are required to keep 8 hours' or 16 hours' watch per day, such watch shall be maintained at the hours prescribed for radiotelegraph service by the International Radiotelegraph Convention in force.

4. By *auto-alarm* is meant an automatic alarm receiver which complies with the requirements of Article 19, § 21, of the General Regulations annexed to the International Radiotelegraph Convention, 1927.

5. By *qualified operator* is meant a person holding a certificate complying with the provisions of the General Regulations annexed to the International Radiotelegraph Convention in force.

6. By *certified watcher* is meant any person holding a watcher's certificate issued under the authority of the Administration.

Article 30

Watchers

1. A watcher's certificate shall not be granted by a Contracting Government unless the applicant proves that he is capable—

(*a*) of receiving and understanding the alarm, distress, safety and urgency signals when these signals occur among a series of other signals;

(*b*) of correct reception by ear of code groups (mixed letters, figures and punctuation marks) at a speed of sixteen groups per minute, each group being composed of five characters and each figure or punctuation mark counting as two characters;

(*c*) of regulating the receivers used in the ship's radiotelegraph installation.

2. The Contracting Governments undertake to take steps to ensure that certified watchers observe the secrecy of correspondence.

Article 31

Technical Requirements

The radiotelegraph installations required by Article 27 above and the direction-finding apparatus required by Article 47 shall comply with the following requirements:—

1. The ship's station must be placed in accordance with the detailed Regulations of the Government of the country to which the ship belongs, in the upper part of the ship in a position of the greatest possible safety, as high as practicable above the deepest load water line.

2. There shall be provided between the bridge of the ship and the wireless telegraph room, means of communication either by voice pipe or by telephone or in some other manner equally efficient.

3. A reliable clock with a seconds hand must be provided in the wireless telegraph room.

4. A reliable emergency light must be provided in the wireless telegraph room.

5. The installation shall comprise a main installation and an emergency (reserve) installation. If, however, the main installation complies with all the requirements of an emergency (reserve) installation the latter is not then obligatory.

6. The main and emergency (reserve) installations must be capable of transmitting and receiving on the frequencies (wave lengths) and types of waves assigned by the International Radiotelegraph Convention in force for the purpose of distress and safety of navigation to ships compulsorily fitted with radiotelegraph installations in accordance with the present Convention.

7. The main and emergency (reserve) transmitters shall have a note frequency of at least 100.

8. The main transmitter shall have a *normal range* of 100 nautical miles, that is to say, it must be capable of transmitting clearly perceptible signals from ship to ship over a range of at least 100 nautical miles by day under normal conditions and circumstances, the receiver being assumed to be one employing a rectifier of the crystal type without amplification.*

9. Sufficient power must be available in a ship station at all times to operate the main radiotelegraph installation efficiently under normal conditions over the above range.

10. All parts of the emergency (reserve) installation shall be placed in the upper part of the ship, in a position of the greatest possible safety, as high above the deepest load water line as practicable. The emergency (reserve) installation must be provided with a source of energy independent of the propelling power of the ship and of the main electricity system and must be capable of being put into operation rapidly and of working for at least six continuous hours.

For the emergency (reserve) installation, the normal range as defined in paragraph 8 above must be at least 80 nautical miles for ships required to maintain a continuous watch and at least 50 nautical miles for all other ships.*

11. The receiving installation must permit of the reception of such of the waves used for the transmission of time signals and meteorological messages as may be considered necessary by the Administration.

12. The receiver must be so arranged as to be capable of maintaining reception by means of a rectifier of the crystal type.

13. In ships in which watch is kept by means of an automatic alarm receiver a means of giving audible warning shall be provided in the wireless telegraph room, in the wireless operator's cabin, and on the bridge, which shall operate continuously after the receiver has been operated by the alarm signal or distress call until stopped. Only one switch for stopping the warning shall be provided and this shall be situated in the wireless telegraph room.

14. In such ships the wireless operator, when going off watch, shall connect the automatic alarm receiver to the

---

* Unless a more precise and practical method is available to determine the range of transmitters it is recommended that, as a guide, the following relations between the range in nautical miles (from ship to ship under normal conditions in daytime) and the power of the ship transmitter in metre ampères for 500 kilocycles per second (600 m) be used:—

100 nautical miles	60 M A
80 nautical miles	45 M A
50 nautical miles	25 M A

M being the actual height in metres of the aerial from its highest point to the load line.

A being the current in ampères measured at the base of the aerial in case of B, or fully modulated A 2, transmitters.

aerial and test its efficiency. He shall report to the master or the officer on watch on the bridge whether it is in working order.

15. Whilst the ship is at sea the emergency source of power shall be maintained at its full efficiency and the automatic alarm receiver shall be tested at least once every 24 hours. A statement that both these requirements have been fulfilled must be inserted in the ship's official log daily.

16. A wireless log shall be carried by every ship compulsorily equipped with wireless transmitting apparatus. This document shall be kept in the wireless telegraph room, and in it shall be inserted the names of the operators and watchers as well as all incidents and occurrences connected with the wireless service which may appear to be of importance to safety of life at sea, and in particular all distress messages and distress traffic in full.

17. The direction-finding apparatus required by Article 47 shall be efficient and capable of receiving clearly perceptible signals and of taking bearings from which the true bearing and direction may be determined. It shall be capable of receiving signals on the frequencies prescribed for distress, direction finding and wireless telegraph beacons by the International Radiotelegraph Convention in force.

Efficient communication shall be provided between the apparatus and the bridge.

Article 32

Competence

The matters governed by the International Radiotelegraph Convention, Washington, 1927, and the Regulations annexed thereto remain, and will continue, subject to the provisions:—

(1) Of that Convention and of the Regulations annexed thereto, and of any Convention and Regulations which may in the future be substituted therefor;

(2) Of the present Convention in regard to all the points in which it supplements the aforementioned documents.

CHAPTER V—SAFETY OF NAVIGATION

Article 33

Application

The provisions of this Chapter referring to ships, unless otherwise expressly provided, apply to all ships on all voyages.

Article 34

Danger Messages

The master of every ship which meets with dangerous ice, a dangerous derelict, a dangerous tropical storm or any other direct danger to navigation is bound to communicate the information, by all the means of communication at his disposal, to the ships in the vicinity, and also to the competent authorities at the first point of the coast with which he can communicate. It is desirable that the said information be sent in the manner set out in Regulation XLVI.

Each Administration will take all steps which it thinks necessary to ensure that when intelligence of any of the dangers specified in the previous paragraph is received, it will be promptly brought to the knowledge of those concerned and communicated to other Administrations interested.

The transmission of messages respecting the dangers specified is free of cost to the ships concerned.

Article 35

Meteorological Services

The Contracting Governments undertake to encourage the collection of meteorological data by ships at sea, and to arrange for their examination, dissemination and exchange in the manner most suitable for the purpose of aiding navigation.

In particular, the Contracting Governments undertake to co-operate in carrying out, as far as practicable, the following meteorological arrangements:—

(*a*) to warn ships of gales, storms and tropical storms, both by the issue of wireless messages and by the display of appropriate signals at coastal points;

(*b*) to issue daily, by radio, weather bulletins suitable for shipping, containing data of existing weather conditions and forecasts;

(*c*) to arrange for certain selected ships to take meteorological observations at specified hours, and to transmit such observations by wireless telegraphy for the benefit of other ships and of the various official meteorological services; and to provide coast stations for the reception of the messages transmitted;

(*d*) to encourage all ship-masters to inform surrounding ships whenever they experience wind force of 10 or above on the Beaufort scale (force 8 or above on the decimal scale).

The information provided for in paragraphs (*a*) and (*b*) of this article will be furnished in form for transmission in accordance with Article 31 §§ 1, 3 and 5, and Article 19,

§ 25, of the General Regulations annexed to the International Radiotelegraph Convention, Washington, 1927, and during transmission "to all stations" of meteorological information, forecasts and warnings, all ship stations must conform to the provisions of Article 31 § 2, of those General Regulations.

Weather observations from ships addressed to national meteorological services will be transmitted with the priority specified in Article 3, Additional Regulations, International Radiotelegraph Convention, Washington, 1927.

Forecasts, warnings, synoptic and other meteorological reports intended for ships shall be issued and disseminated by the national service in the best position to serve various zones and areas, in accordance with mutual arrangements made by the countries concerned.

Every endeavour will be made to obtain a uniform procedure in regard to the international meteorological services specified in this Article, and, as far as is practicable, to conform to the recommendations made by the International Meteorological Organization, to which organization the Contracting Governments may refer for study and advice any meteorological questions which may arise in carrying out the present Convention.

Article 36

Ice Patrol. Derelicts

The Contracting Governments undertake to continue a service of ice patrol and a service for study and observation of ice conditions in the North Atlantic. Further, they undertake to take all practicable steps to ensure the destruction or removal of derelicts in the northern part of the Atlantic Ocean east of the line drawn from Cape Sable to a point in latitude 34° N. longitude 70° W. if this destruction or removal is considered necessary at the time.

The Contracting Governments undertake to provide not more than three vessels for these three services. During the whole of the ice season they shall be employed in guarding the southeastern, southern and southwestern limits of the regions of icebergs in the vicinity of the Great Bank of Newfoundland for the purpose of informing transatlantic and other passing vessels of the extent of this dangerous region; for the observation and study of ice conditions in general; for the destruction or removal of derelicts; and for the purpose of affording assistance to vessels and crews requiring aid within the limits of operation of the patrol vessels.

During the rest of the year the study and observation of ice conditions shall be maintained as advisable, and one vessel shall always be available for the search for, and destruction or removal of derelicts.

Article 37

Ice Patrol. Management and Cost

The Government of the United States is invited to continue the management of these services of ice patrol, study and observation of ice conditions, and derelict destruction and removal. The Contracting Governments specially interested in these services, whose names are given below, undertake to contribute to the expense of maintaining and operating these services in the following proportions:—

	Per cent.
Belgium	2
Canada	3
Denmark	2
France	6
Germany	10
Great Britain and Northern Ireland	40
Italy	6
Japan	1
Netherlands	5
Norway	3
Spain	1
Sweden	2
Union of Socialist Soviet Republics	1
United States of America	18

Each of the Contracting Governments has the right to discontinue its contribution to the expense of maintaining and operating these services after the 1st September, 1932. Nevertheless, the Contracting Government which avails itself of this right will continue responsible for the expense of working up to the 1st September following the date of giving notice of intention to discontinue its contribution. To take advantage of the said right it must give notice to the other Contracting Governments at least six months before the said 1st September; so that, to be free from this obligation on the 1st September, 1932, it must give notice on the 1st March, 1932, at the latest, and similarly for each subsequent year.

If, at any time, the United States Government should not desire to continue these services, or if one of the Contracting Governments should express a wish to relinquish responsibility for the pecuniary contribution defined above, or to have its percentage of obligation altered, the Contracting Governments shall settle the question in accordance with their mutual interests.

The Contracting Governments which contribute to the cost of the three abovementioned services shall have the right by common consent to make from time to time such alterations in the provisions of this Article and of Article 36 as appear desirable.

ARTICLE 38

Speed Near Ice

When ice is reported on, or near, his course, the master of every ship at night is bound to proceed at a moderate speed or to alter his course so as to go well clear of the danger zone.

ARTICLE 39

North Atlantic Routes

The practice of following recognized routes across the North Atlantic in both directions has contributed to safety of life at sea, but the working of these routes should be further investigated and studied with a view to the introduction of such variations as experience may show to be necessary.

The selection of the routes and the initiation of action with regard to them is left to the responsibility of the steamship companies concerned. The Contracting Governments will assist the companies, when requested to do so, by placing at their disposal any information bearing on the routes which may be in the possession of the Governments.

The Contracting Governments undertake to impose on the companies the obligation to give public notice of the regular routes which they propose their vessels should follow, and of any changes made in these routes; they will also use their influence to induce the owners of all vessels crossing the Atlantic to follow, so far as circumstances will permit, the recognized routes, and to induce the owners of all vessels crossing the Atlantic bound to or from ports of the United States via the vicinity of the Great Bank of Newfoundland to avoid, as far as practicable, the fishing banks of Newfoundland north of latitude 43° N. during the fishing season, and to pass outside regions known or believed to be endangered by ice.

The Administration managing the ice patrol service is requested to report to the Administration concerned any ship which is observed not to be on any regular, recognized or advertised route, or which crosses the abovementioned fishing banks during the fishing season, or which, when proceeding to or from ports of the United States, passes through regions known or believed to be endangered by ice.

ARTICLE 40

Collision Regulations

The Contracting Governments agree that the alterations in the International Regulations for Preventing Collisions at Sea shown in Annex II are desirable and ought to be

made. The Government of the United Kingdom of Great Britain and Northern Ireland is requested to forward full particulars of the alterations to the other Governments who have accepted the International Regulations for Preventing Collisions at Sea, and ascertain whether they will adopt these alterations; to report the result to the Governments represented at this Conference, and to endeavour to arrange that the revised regulations shall come in force on the 1st July, 1931.

ARTICLE 41

Helm Orders

The Contracting Governments agree that after midnight on the 30th June, 1931, helm or steering orders, *i.e.*, orders to the steersman, shall on all their ships be given in the direct sense, *e.g.*, when the ship is going ahead an order containing the word " starboard " or " right " or any equivalent of " starboard " or " right " shall only be used when it is intended, on ships as at present generally constructed and arranged, that the wheel, the rudder-blade and the head of the ship, shall all move to the right.

ARTICLE 42

Misuse of Distress Signals

The use of an international distress signal, except for the purpose of indicating that a vessel is in distress, and the use of any signal which may be confused with an international distress signal, are prohibted on every ship.

ARTICLE 43

Alarm, Distress and Urgency Signals

The alarm signal and the distress signal may only be used by ships in serious and imminent danger which require immediate assistance. In all other cases in which assistance is required, or in which a vessel desires to issue a warning that it may become necessary to send out the alarm signal or the distress signal at a later stage, use must be made of the urgency signal (XXX) established by the International Radiotelegraph Convention, Washington, 1927.

If a ship has sent out the alarm or distress signal and subsequently finds that assistance is no longer required such ship shall immediately notify all stations concerned as provided for by the Radiotelegraph Convention in force.

Article 44

Speed of Distress Messages

The speed of transmission of messages in connection with cases of distress, urgency or safety, shall not exceed 16 words per minute.

Article 45

Distress Messages. Procedure

1. The master of a ship on receiving on his ship a wireless distress signal from any other ship, is bound to proceed with all speed to the assistance of the persons in distress, unless he is unable, or in the special circumstances of the case, considers it unreasonable or unnecessary to do so, or unless he is released under the provisions of paragraphs 3 and 4 of this Article.

2. The master of a ship in distress, after consultation, so far as may be possible, with the masters of the ships which answer his call for assistance, has the right to requisition such one or more of those ships as he considers best able to render assistance, and it shall be the duty of the master or masters of the ship or ships requisitioned to comply with the requisition by continuing to proceed with all speed to the assistance of the persons in distress.

3. A master shall be released from the obligation imposed by paragraph 1 of this Article as soon as he is informed by the master of the ship requisitioned, or, where more ships than one are requisitioned, all the masters of the ships requisitioned, that he or they are complying with the requisition.

4. A master shall be released from the obligation imposed by paragraph 1 of this Article, and, if his ship has been requisitioned, from the obligation imposed by paragraph 2 of this Article, if he is informed by a ship which has reached the persons in distress, that assistance is no longer necessary.

5. If a master of a ship, on receiving a wireless distress call from another ship, is unable, or in the special circumstances of the case considers it unreasonable or unnecessary to go to the assistance of that other ship, he must immediately inform the master of that other ship accordingly, and enter in his log-book his reasons for failing to proceed to the assistance of the persons in distress.

6. The provisions of this Article do not prejudice the International Convention for the unification of certain rules with respect to Assistance and Salvage at Sea, signed at Brussels on the 23rd September, 1910, particularly the obligation to render assistance imposed by Article 11 of that Convention.

ARTICLE 46

Signalling Lamp

All ships of over 150 tons gross tonnage when engaged on international voyages, shall have on board an efficient signalling lamp.

ARTICLE 47

Direction-Finding Apparatus

Every passenger ship of 5,000 tons gross tonnage and upwards shall, within two years from the date on which the present Convention comes in force, be provided with an approved direction-finding apparatus (radio compass), complying with the provisions of Article 31 (17) of the present Convention.

ARTICLE 48

Manning

The Contracting Governments undertake, each for its national ships, to maintain, or, if it is necessary, to adopt measures for the purpose of ensuring that, from the point of view of safety of life at sea, all ships shall be sufficiently and efficiently manned.

CHAPTER VI—CERTIFICATES

ARTICLE 49

Issue of Certificates

A certificate called a *Safety Certificate* shall be issued, after inspection and survey, to every passenger ship which complies in an efficient manner with the requirements of Chapters II, III and IV of the Convention.

A certificate called a *Safety Radiotelegraphy Certificate* shall be issued after inspection to every ship other than a passenger ship which complies in an efficient manner with the requirements of Chapter IV of the present Convention.

A certificate called an *Exemption Certificate* shall be issued to every ship to which exemption is granted by a Contracting Government under, and in accordance with, the provisions of Chapters II, III and IV of the present Convention.

The inspection and survey of ships, so far as regards the enforcement of the provisions of the present Convention and the annexed Regulations applicable to such ships and the granting of exemptions therefrom, shall be carried out by officers of the country in which the ship is registered,

provided that the Government of each country may entrust the inspection and survey of its ships either to Surveyors nominated for this purpose or to organizations recognized by it. In every case the Government concerned fully guarantees the completeness and efficiency of the inspection and survey.

A Safety Certificate, Safety Radiotelegraphy Certificate, and Exemption Certificate shall be issued either by the Government of the country in which the ship is registered or by any person or organization duly authorized by that Government. In every case that Government assumes full responsibility for the certificate.

Article 50

Issue of Certificate by Another Government

A Contracting Government may, at the request of the Government of a country in which a ship coming under the present Convention is registered, cause that ship to be surveyed, and, if satisfied that the requirements of the present Convention are complied with, issue a Safety Certificate or Safety Radiotelegraphy Certificate to such ship, under its own responsibility. Any certificate so issued must contain a statement to the effect that it has been issued at the request of the Government of the country in which the ship is registered, and it shall have the same force and receive the same recognition as a certificate issued under Article 49 of the present Convention.

Article 51

Form of Certificates

All certificates shall be drawn up in the official language or languages of the country by which they are issued.

The form of the certificate shall be that of the models given in Regulation XLVII. The arrangement of the printed part of the standard certificates shall be exactly reproduced in the certificates issued, or in certified copies thereof, and the particulars inserted by hand shall in the certificates issued, or in certified copies thereof, be inserted in Roman characters and Arabic figures.

The Contracting Governments undertake to communicate one to another a sufficient number of specimens of their certificates for the information of their officers. This exchange shall be made, so far as possible, before the 1st January, 1932.

ARTICLE 52

Duration of Certificates

Certificates shall not be issued for a period of more than twelve months.

If a ship at the time when its certificate expires is not in a port of the country in which it is registered the certificate may be extended by a duly authorized officer of the country to which the ship belongs; but such extension shall be granted only for the purpose of allowing the ship to complete its return voyage to its own country, and then only in cases in which it appears proper and reasonable so to do.

No certificate shall be extended for a longer period than five months, and a ship to which such extension is granted shall not, on returning to its own country, be entitled by virtue of such extension to leave that country again without having obtained a new certificate.

ARTICLE 53

Acceptance of Certificates

Certificates issued under the authority of a Contracting Government shall be accepted by the other Contracting Governments for all purposes covered by the present Convention. They shall be regarded by the other Contracting Governments as having the same force as the certificates issued by them to their own ships.

ARTICLE 54

Control

Every ship holding a certificate issued under Article 49 or Article 50 is subject, in the ports of the other Contracting Governments, to control by officers duly authorized by such Governments in so far as this control is directed towards verifying that there is on board a valid certificate, and if necessary, that the conditions of the vessel's seaworthiness correspond substantially with the particulars of that certificate; that is to say, so that the ship can proceed to sea without danger to the passengers and the crew.

In the event of this control giving rise to intervention of any kind, the officer carrying out the control shall forthwith inform the Consul of the country in which the ship is registered of all the circumstances in which intervention is deemed to be necessary.

ARTICLE 55

Privileges

The privileges of the present Convention may not be claimed in favour of any ship unless it holds a proper valid certificate.

ARTICLE 56

Qualification of Certificate

If in the course of a particular voyage the ship has on board a number of crew and passengers less than the maximum number which the ship is licensed to carry, and is in consequence, in accordance with the provisions of the present Convention, free to carry a smaller number of lifeboats and other life-saving appliances than that stated in the certificate, a memorandum may be issued by the officers or other authorized persons referred to in Articles 49 and 52 above.

This memorandum shall state that in the circumstances there is no infringement of the provisions of the present Convention. It shall be annexed to the certificate and shall be substituted for it in so far as the life-saving appliances are concerned. It shall be valid only for the particular voyage in regard to which it is issued.

CHAPTER VII—GENERAL PROVISIONS

ARTICLE 57

Equivalents

Where in the present Convention it is provided that a particular fitting, appliance or apparatus, or type thereof, shall be fitted or carried in a ship, or that any particular arrangement shall be adopted, any Administration may accept in substitution therefor any other fitting, appliance or apparatus, or type thereof, or any other arrangement, provided that such Administration shall have been satisfied by suitable trials that the fitting, appliance or apparatus, or type thereof, or the arrangement substituted is at least as effective as that specified in the present Convention.

Any Administration which so accepts a new fitting, appliance or apparatus, or type thereof, or new arrangement, shall communicate the fact to the other Administrations, and, upon request, the particulars thereof, together with a report on the trials made.

ARTICLE 58

Laws, Regulations, Reports

The Contracting Governments undertake to communicate to each other—

(1) the text of laws, decrees and regulations which shall have been promulgated on the various matters within the scope of the present Convention;

(2) all available official reports or official summaries of reports in so far as they show the results of the provisions of the present Convention, provided always that such reports or summaries are not of a confidential nature.

The Government of the United Kingdom of Great Britain and Northern Ireland is invited to serve as an intermediary for collecting all this information and for bringing it to the knowledge of the other Contracting Governments.

ARTICLE 59

Measures taken after Agreement

Where the present Convention provides that a measure may be taken after agreement between all or some of the Contracting Governments, the Government of the United Kingdom of Great Britain and Northern Ireland is invited to approach the other Contracting Governments with a view to ascertaining whether they accept such proposals as may be made by any Contracting Government for effecting such a measure, and to inform the other Contracting Governments of the results of the enquiries thus made.

ARTICLE 60

Prior Treaties and Conventions

1. The present Convention replaces and abrogates the Convention for the Safety of Life at Sea, which was signed at London on the 20th January, 1914.

2. All other treaties, conventions and arrangements relating to safety of life at sea, or matters appertaining thereto, at present in force between Governments parties to the present Convention, shall continue to have full and complete effect during the terms thereof as regards—

(*a*) ships to which the present Convention does not apply;

(*b*) ships to which the present Convention applies, in respect of subjects for which it has not expressly provided.

To the extent, however, that such treaties, conventions or arrangements conflict with the provisions of the present Convention, the provisions of the present Convention shall prevail.

3. All subjects which are not expressly provided for in the present Convention remain subject to the legislation of the Contracting Governments.

ARTICLE 61

Modifications. Future Conferences

1. Modifications of the present Convention which may be deemed useful or necessary improvements may be at any time proposed by any Contracting Government to the Government of the United Kingdom of Great Britain and Northern Ireland, and such proposals shall be communicated by the latter to all the other Contracting Governments, and if any such modifications are accepted by all the Contracting Governments (including Governments which have deposited ratifications or accessions which have not yet become effective) the present Convention shall be modified accordingly.

2. Conferences for the purpose of revising the present Convention shall be held at such times and places as may be agreed upon by the Contracting Governments.

A Conference for this purpose shall be convoked by the Government of the United Kingdom of Great Britain and Northern Ireland whenever, after the present Convention has been in force for five years, one-third of the Contracting Governments express a desire to that effect.

CHAPTER VIII—FINAL PROVISIONS

ARTICLE 62

Application to Colonies, Etc.

1. A Contracting Government may, at the time of signature, ratification, accession or thereafter, by a declaration in writing addressed to the Government of the United Kingdom of Great Britain and Northern Ireland, declare its desire that the present Convention shall apply to all or any of its colonies, overseas territories, protectorates or territories under suzerainty or mandate, and the present Convention shall apply to all the territories named in such declaration, two months after the date of the receipt thereof, but failing such declaration, the present Convention will not apply to any such territories.

2. A Contracting Government may at any time by a notification in writing addressed to the Government of the United Kingdom of Great Britain and Northern Ireland express its desire that the present Convention shall cease to apply to all or any of its colonies, overseas territories, protectorates or territories under suzerainty or mandate to which the present Convention shall have, under the provisions of the preceding paragraph, been applicable for a period of not less than five years, and in such case the pres-

ent Convention shall cease to apply one year after the date of the receipt of such notification by the Government of the United Kingdom of Great Britain and Northern Ireland to all territories mentioned therein.

3. The Government of the United Kingdom of Great Britain and Northern Ireland shall inform all the other Contracting Governments of the application of the present Convention to any colony, overseas territory, protectorate or territory under suzerainty or mandate under the provisions of paragraph 1 of this Article, and of the cessation of any such application under the provisions of paragraph 2, stating in each case the date from which the present Convention has become or will cease to be applicable.

Article 63

Authentic Texts. Ratification

The present Convention of which both the English and French texts shall be authentic shall bear this day's date.

The present Convention shall be ratified.

The instruments of ratification shall be deposited in the archives of the Government of the United Kingdom of Great Britain and Northern Ireland which will notify all the other signatory or acceding Governments of all ratifications deposited and the date of their deposit.

Article 64

Accession

A Government (other than the Government of a territory to which Article 62 applies) on behalf of which the present Convention has not been signed shall be allowed to accede thereto at any time after the Convention has come into force. Accessions may be effected by means of notifications in writing addressed to the Government of the United Kingdom of Great Britain and Northern Ireland, and shall take effect three months after their receipt.

The Government of the United Kingdom of Great Britain and Northern Ireland shall inform all signatory and acceding Governments of all accessions received and of the date of their receipt.

A Government which intends to accede to the present Convention but desires to add an area to those specified in the Annex to Article 28 shall, before notifying its accession, inform the Government of the United Kingdom of Great Britain and Northern Ireland of its desire for communication to all the other Contracting Governments. If all the Contracting Governments signify their assent thereto, the area shall be added to those mentioned in the aforesaid Annex when such Government notifies its accession.

ARTICLE 65

Date of coming in Force

The present Convention shall come into force on the 1st July, 1931, as between the Governments which have deposited their ratifications by that date, and provided that at least five ratifications have been deposited with the Government of the United Kingdom of Great Britain and Northern Ireland. Should five ratifications not have been deposited on that date, the present Convention shall come into force three months after the date on which the fifth ratification is deposited. Ratifications deposited after the date on which the present Convention has come into force shall take effect three months after the date of their deposit.

ARTICLE 66

Denunciation

The present Convention may be denounced on behalf of any Contracting Government at any time after the expiration of five years from the date on which the Convention comes into force in so far as that Government is concerned. Denunciation shall be effected by a notification in writing addressed to the Government of the United Kingdom of Great Britain and Northern Ireland, which will notify all the other Contracting Governments of all denunciations received and of the date of their receipt.

A denunciation shall take effect twelve months after the date on which notification thereof is received by the Government of the United Kingdom of Great Britain and Northern Ireland.

In faith whereof, the Plenipotentiaries have signed hereafter.

Done at London this thirty-first day of May, 1929, in a single copy, which shall remain deposited in the archives of the Government of the United Kingdom of Great Britain and Northern Ireland, which shall transmit certified true copies thereof to all signatory Governments.

STHAMER
GUSTAV KOENIGS
ARTHUR WERNER
WALTER LAAS
OTTO RIESS
HERMANN GIESS
HUGO DOMINIK

HENRY JAMES FEAKES
THOMAS FREE

A. DE GERLACHE DE GOMERY
G. DE WINNE

A. JOHNSTON
LUCIEN PACAUD

EMIL KROGH
V. LORCK

JAVIER de SALAS

JOHN WHELAN DULANTY
E. C. FOSTER

WALLACE H. WHITE
ARTHUR J. TYRER
CHARLES M. BARNES
GEO. H. ROCK
CLARENCE S. KEMPFF
DICKERSON N. HOOVER
W. D. TERRELL
JOHN G. TAWRESEY
HERBERT B. WALKER
CHARLES A. McALLISTER

GUSTAF WREDE
V. BERGMAN
KARL KURTEN

RIO
A. HAARBLEICHER
JEAN MARIE
F. THOUROUDE

H. W. RICHMOND
WESTCOTT ABELL
A. L. AYRE
F. W. BATE
C. H. BOYD
WILLIAM C. CURRIE
A. J. DANIEL
NORMAN HILL
C. HIPWOOD
A. MORRELL

G. L. CORBETT
E. V. WHISH
MANSUKHLAL ATMARAM MASTER

GIULIO INGIANNI
ALBERTO ALESSIO
DELFINO ROGERI DI VILLANOVA
TORQUATO C. GIANNINI
FRANCESCO MARENA

ERNESTO FERRETTI
G. GNEME
LUIGI BIANCHERI

YUKIO YAMAMOTO
SHICHIHEI OTA
ITARO ISHII

B. VOGT
L. T. HANSEN
ARTH H. MATHIESEN

C. FOCK
C. H. DE GOEJE
A. VAN DRIEL
J. A. BLAND-V-D-BERG
PHS. VAN OMMEREN
H. G. J. UILKENS

ERIK PALMSTIERNA
NILS GUSTAF NILSSON

J. ARENS
K. EGGI

ANNEX I

REGULATIONS

CONSTRUCTION

Regulation I

Definitions

(1) The *subdivision loadline* is the waterline used in determining the subdivision of the ship.

The *deepest subdivision loadline* is that which corresponds to the greatest draught.

(2) *The length of the ship* is the length measured between perpendiculars taken at the extremities of the deepest subdivision loadline.

(3) *The breadth of the ship* is the extreme width from outside of frame to outside of frame at or below the deepest subdivision loadline.

(4) *The bulkhead deck* is the uppermost deck up to which the transverse water-tight bulkheads are carried.

(5) The *margin line* is a line drawn parallel to the bulkhead deck at side and 3 inches (76 millimetres) below the upper surface of that deck at side.

(6) The *draught* is the vertical distance from the top of keel amidships to the subdivision loadline in question.

(7) The *permeability* of a space is the percentage of that space which can be occupied by water.

The volume of a space which extends above the margin line shall be measured only to the height of that line.

(8) The *machinery space* is to be taken as extending from the top of keel to the margin line and between the extreme main transverse watertight bulkheads bounding the spaces devoted to the main and auxiliary propelling machinery, boilers when installed, and all permanent coal bunkers.

(9) *Passengers spaces* are those which are provided for the accommodation and use of passengers, excluding baggage, store, provision and mail rooms.

For the purposes of Regulations III and IV, spaces provided below the margin line for the accommodation and use of the crew shall be regarded as passenger spaces.

(10) In all cases *volumes* shall be calculated to moulded lines.

Regulation II

Floodable Length

(1) The floodable length at any point of the length of a ship shall be determined by a method of calculation which takes into consideration the form, draught and other characteristics of the ship in question.

(2) In a ship with a continuous bulkhead deck, the floodable length at a given point is the maximum portion of the length of the ship, having its centre at the point in question, which can be flooded under the definite assumptions hereafter set forth in Regulation III without the ship being submerged beyond the margin line.

(3) In the case of a ship not having a continuous bulkhead deck, the floodable length at any point may be determined to an assumed continuous margin line, up to which, having regard to sinkage and trim after damage, the sides of the ship and the bulkheads concerned are carried watertight.

Regulation III

Permeability

(1) The definite assumptions referred to in Regulation II relate to the permeabilities of the spaces below the margin line.

In determining the floodable length, a uniform average permeability shall be used throughout the whole length of each of the following portions of the ship below the margin line:—

(*a*) the machinery space as defined in Regulation I (8);

(*b*) the portion forward of the machinery space; and

(*c*) the portion abaft the machinery space.

(2) —(*a*) For steamships the uniform average permeability throughout the machinery space shall be determined from the formula—

$$80+12{\cdot}5\left(\frac{a-c}{v}\right), \text{ where}$$

a=volume of the passenger spaces, as defined in Regulation I (9), which are situated below the margin line within the limits of the machinery space.

c=volume of between deck spaces below the margin line within the limits of the machinery space which are appropriated to cargo, coal or stores.

v=whole volume of the machinery space below the margin line.

(*b*) For ships propelled by internal combustion engines, the uniform average permeability shall be taken as 5 greater than that given by the above formula.

(*c*) Where it is shown to the satisfaction of the Administration that the average permeability, as determined by detail calculation, is less than that given by the formula, the calculated value may be substituted. For the purposes of such calculation, the permeabilities of passenger spaces, as defined in Regulation I (9), shall be taken as 95, that of all cargo, coal and store spaces as 60, and that of double bottom, oil fuel and other tanks at such values as may be approved in each case by the Administration.

(3) The uniform average permeability throughout the portion of the ship before (or abaft) the machinery space shall be determined from the formula—

$$63+35\frac{a}{v}\text{ , where}$$

a=volume of the passenger spaces, as defined in Regulation I (9), which are situated below the margin line, before (or abaft) the machinery space, and

v=whole volume of the portion of the ship below the margin line before (or abaft) the machinery space.

(4) If a between deck compartment between two watertight transverse bulkheads contains any passenger or crew space, the whole of that compartment, less any space completely enclosed within permanent steel bulkheads and appropriated to other purposes, shall be regarded as passenger space. If, however, the passenger or crew space in question is completely enclosed within permanent steel bulkheads, only the space so enclosed need be considered as passenger space.

Regulation IV

Permissible Length of Compartments

(1) *Factor of Subdivision.*—The maximum permissible length of a compartment having its centre at any point in the ship's length is obtained from the floodable length by multiplying the latter by an appropriate factor called the *factor of subdivision.*

The factor of subdivision shall depend on the length of the ship, and for a given length shall vary according to the nature of the service for which the ship is intended. It shall decrease in a regular and continuous manner—

(*a*) as the length of the ship increases, and

(*b*) from a factor A, applicable to ships primarily engaged in the carriage of cargo, to a factor B, applicable to ships primarily engaged in the carriage of passengers.

The variations of the factors A and B shall be expressed by the following formulæ (i) and (ii) where L is the length of the ship as defined in Regulation I (2):—

L in feet

$$A=\frac{190}{L-198}+\cdot 18 \qquad (L=430 \text{ and upwards})$$

$$B=\frac{100}{L-138}+\cdot 18 \qquad (L=260 \text{ and upwards})$$

L in metres

$$A=\frac{58.2}{L-60}+\cdot 18 \qquad (L=131 \text{ and upwards}) \ldots . (i)$$

$$B=\frac{30.3}{L-42}+\cdot 18 \qquad (L=79 \text{ and upwards}) \ldots . (ii)$$

(2) *Criterion of Service.*—For a ship of given length the appropriate factor of subdivision shall be determined by the Criterion of Service Numeral (hereinafter called the Criterion Numeral) as given by the following formulæ (iii) and (iv) where:—

C_s=the Criterion Numeral;
L=length of the ship, as defined in Regulation I (2);
M=the volume of the machinery space, as defined in Regulation I (8); with the addition thereto of the volume of any permanent oil fuel bunkers which may be situated above the inner bottom and before or abaft the machinery space;
P=the whole volume of the passenger spaces below the margin line, as defined in Regulation I (9);
V=the whole volume of the ship below the margin line;
P_1=KN where:—
N=number of passengers for which the ship is to be certified, and
K has the following values:—

	Value of K.
Length in feet and volumes in cubic feet	·6 L
Length in metres and volumes in cubic metres	·056 L

Where the value of KN is greater than the sum of P and the whole volume of the actual passenger spaces above the margin line the lower figure may be taken provided that the value of P_1 used is not less than $\frac{2}{3}$ KN.

When P_1 is greater than P

$$C_s=72\,\frac{M+2P_1}{V+P_1-P} \ldots\ldots\ldots\ldots\ldots\ldots\ldots\ldots (iii)$$

and in other cases

$$C_s=72\,\frac{M+2P}{V} \ldots\ldots\ldots\ldots\ldots\ldots\ldots\ldots (iv)$$

For ships not having a continuous bulkhead deck the volumes are to be taken up to the actual margin lines used in determining the floodable lengths.

(3) *Rules for Subdivision.*—(*a*) *The subdivision abaft the fore peak* of ships 430 feet (131 metres) in length and upwards having a criterion numeral of 23 or less shall be governed by the factor A given by formula (i); of those having a criterion numeral of 123 or more by the factor B given by formula (ii); and of those having a criterion numeral between 23 and 123 by the factor F obtained by linear interpolation between the factors A and B, using the formula:—

$$F=A-\frac{(A-B)\ (C_s-23)}{100} \quad \ldots\ldots\ldots\ldots\ldots\ldots \quad (v)$$

Where the factor F is less than ·40 and it is shown to the satisfaction of the Administration to be impracticable to comply with the factor F in a machinery compartment of the ship, the subdivision of such compartment may be governed by an increased factor, which, however, shall not exceed ·40.

(*b*) *The subdivision abaft the fore peak* of ships less than 430 feet (131 metres) but not less than 260 feet (79 metres) in length having a criterion numeral equal to S

$$\text{where } S=\frac{9382-20L}{34}\ (L \text{ in feet})=\frac{3574-25L}{13}\ (L \text{ in metres})$$

shall be governed by the factor unity; of those having a criterion numeral of 123 or more by the factor B given by the formula (ii); of those having a criterion numeral between S and 123 by the factor F obtained by linear interpolation between unity and the factor B, using the formula:—

$$F=1-\frac{(1-B)\ (C_s-S)}{123-S} \quad \ldots\ldots\ldots\ldots\ldots\ldots \quad (vi)$$

(*c*) *The subdivision abaft the fore peak* of ships less than 430 feet (131 metres) but not less than 260 feet (79 metres) in length and having a criterion numeral less than S, and of all ships less than 260 feet (79 metres) in length shall be governed by the factor unity, unless it is shown to the satisfaction of the Administration to be impracticable to comply with this factor in any part of the ship, in which case, the Administration may allow such relaxation as may appear to be justified, having regard to all the circumstances.

(*d*) The provisions of sub-paragraph (*c*) shall apply also to ships of whatever length, which are to be certified to carry a number of passengers exceeding 12 but not exceeding $\frac{L^2 \text{ in feet})}{7000}$ $\left(\frac{L^2 \text{ (in metres)}}{650}\right)$ or 50, whichever is the less.

REGULATION V

Special Rules concerning Subdivision

(1) A compartment may exceed the permissible length determined by the rules of Regulation IV provided the combined length of each pair of adjacent compartments to which the compartment in question is common does not exceed either the floodable length or twice the permissible length, whichever is the less.

If one of the two adjacent compartments is situated inside the machinery space, and the second is situated outside the machinery space, and the average permeability of the portion of the ship in which the second is situated differs from that of the machinery space, the combined length of the two compartments shall be adjusted to the mean average permeability of the two portions of the ship in which the compartments are situated.

Where the two adjacent compartments have different factors of subdivision, the combined length of the two compartments shall be determined proportionately.

(2) In ships 430 feet (131 metres) in length and upwards, one of the main transverse bulkheads abaft the fore peak shall be fitted at a distance from the forward perpendicular which is not greater than the permissible length.

(3) A main transverse bulkhead may be recessed provided that all parts of the recess lie inboard of vertical surfaces on both sides of the ship, situated at a distance from the shell plating equal to one-fifth the breadth of the ship, as defined in Regulation I (3), and measured at right angles to the centreline at the level of the deepest subdivision loadline.

Any part of a recess which lies outside these limits shall be dealt with as a step in accordance with the following paragraph.

(4) A main transverse bulkhead may be stepped provided that—

(*a*) the combined length of the two compartments, separated by the bulkhead in question, does not exceed 90 per cent of the floodable length, or

(*b*) additional subdivision is provided in way of the step to maintain the same measure of safety as that secured by a plane bulkhead.

(5) Where a main transverse bulkhead is recessed or stepped, an equivalent plane bulkhead shall be used in determining the subdivision.

(6) If the distance between two adjacent main transverse bulkheads, or their equivalent plane bulkheads, or the distance between the transverse planes passing through the nearest stepped portions of the bulkheads, is less than 10 feet (3·05 metres) plus 2 per cent of the length of the ship, only one of these bulkheads shall be regarded as forming part of the subdivision of the ship in accordance with the provisions of Regulation IV.

(7) Where a main transverse watertight compartment contains local subdivision and it can be shown to the satisfaction of the Administration that, after any assumed side damage extending over a length of 10 feet (3·05 metres) plus 2 per cent of the length of the ship, the whole volume of the main compartment will not be flooded, a proportionate allowance may be made in the permissible length otherwise required for such compartment.

In such a case the volume of effective buoyancy assumed on the undamaged side shall not be greater than that assumed on the damaged side.

(8) Where it is proposed to fit watertight decks, inner skins or longitudinal bulkheads, watertight or non-watertight, the Administration shall be satisfied that the safety of the ship will not be diminished in any respect, particularly having in view the possible listing effect of flooding in way of such structural arrangements.

Regulation VI

Peak and Machinery Space Bulkheads, Shaft Tunnels, Etc.

(1) Every ship shall have a forepeak or collision bulkhead, which shall be watertight up to the bulkhead deck. This bulkhead shall be fitted not less than 5 per cent of the length of the ship, and not more than 10 feet (3·05 metres) plus 5 per cent of the length of the ship from the forward perpendicular.

If the ship has a long forward superstructure, the forepeak bulkhead shall be extended weathertight to the deck next above the bulkhead deck. The extension need not be fitted directly over the bulkhead below, provided it is at least 5 per cent of the length of the ship from the forward perpendicular, and the part of the bulkhead deck which forms the step is made effectively weathertight.

(2) An afterpeak bulkhead, and bulkheads dividing the machinery space, as defined in Regulation I (8), from the cargo and passenger spaces forward and aft, shall also be fitted and made watertight up to the bulkhead deck. The

afterpeak bulkhead may, however, be stopped below the bulkhead deck, provided the degree of safety of the ship as regards subdivisions is not thereby diminished.

(3) In all cases stern tubes shall be enclosed in watertight spaces. The stern gland shall be situated within a watertight shaft tunnel or other space of such volume that if flooded by leakage through the stern gland the margin line will not be submerged.

Regulation VII

Assigning, Marking and Recording of Subdivision Loadlines

(1) The subdivision loadlines assigned and marked under the provisions of Article 5 of the Convention shall be recorded in the Safety Certificate, and shall be distinguished by the notation C.1 for the principal passenger condition, and C.2, C.3, etc., for the alternative conditions.

(2) The freeboard corresponding to each of these loadlines inserted in the Safety Certificate shall be measured at the same position and from the same deck line as the freeboards determined by recognized national Freeboard Regulations.

(3) In no case shall any subdivision loadline mark be placed above the deepest loadline in salt water as determined by the strength of the ship and/or recognized national Freeboard Regulations.

(4) Whatever may be the position of the subdivision loadline marks, a ship shall in no case be loaded so as to submerge the loadline mark appropriate to the season and locality as determined by the recognized national Freeboard Regulations.

Regulation VIII

Construction and Initial Testing of Watertight Bulkheads, Etc.

(1) Watertight subdivision bulkheads, whether transverse or longitudinal, shall be constructed in such a manner that they shall be capable of supporting with a proper margin of resistance, the pressure due to a head of water up to the margin line in way of each bulkhead. The construction of these bulkheads shall be to the satisfaction of the Administration.

(2) Steps and recesses in bulkheads shall be watertight and as strong as the bulkhead at the place where each occurs.

Where frames or beams pass through a watertight deck or bulkhead, such deck or bulkhead shall be made structurally watertight without the use of wood or cement.

(3) Testing main compartments by filling them with water is not compulsory. A complete examination of the bulkheads shall be made by a surveyor; and, in addition, a hose test shall be made in all cases.

(4) The forepeak shall be tested with water to a head up to the deepest subdivision loadline.

(5) Double bottoms, including duct keels, and inner skins are to be subjected to a head of water up to the margin line.

(6) Tanks which are intended to hold liquids, and which form part of the subdivision of the ship, shall be tested for tightness with water to a head up to the deepest subdivision loadline or to a head corresponding to two-thirds of the depth from the top of keel to the margin line in way of the tanks, whichever is the greater; provided that in no case shall the test head be less than 3 feet (·92 metre) above the top of the tank.

Regulation IX

Openings in Watertight Bulkheads

(1) The number of openings in watertight bulkheads shall be reduced to the minimum compatible with the design and proper working of the ship; satisfactory means shall be provided for closing these openings.

(2)—(*a*) Where pipes, scuppers, electric-light cables, etc., are carried through watertight subdivision bulkheads, arrangements shall be made to ensure the integrity of the watertightness of the bulkheads.

(*b*) Sluice valves shall not be permitted in the watertight subdivision bulkheads.

(3)—(*a*) No doors, manholes, or access openings are permitted—

(i) in the collision bulkhead below the margin line;

(ii) in watertight transverse bulkheads dividing a cargo space from an adjoining cargo space or from a permanent or reserve bunker, except as provided in paragraph (7).

(*b*) The collision bulkhead may be pierced below the margin line by not more than one pipe for dealing with fluid in the fore peak tank, provided that the pipe is fitted with a screwdown valve capable of being operated from above the bulkhead deck, the valve chest being secured inside the fore peak to the collision bulkhead.

(4) (*a*) Watertight doors fitted in bulkheads between permanent and reserve bunkers, shall be always accessible, except as provided in sub-paragraph 9 (*b*) for between deck bunker doors.

(*b*) Satisfactory arrangements shall be made by means of screens or otherwise, to prevent the coal from interfering with the closing of watertight bunker doors.

(5) Within the machinery space and apart from bunker and shaft tunnel doors, not more than one door may be fitted in each main transverse bulkhead for intercommunication. These doors shall be located so as to have the sills as high as practicable.

(6) (*a*) The only types of watertight doors permissible are hinged doors, sliding doors, and doors of other equivalent patterns, excluding plate doors secured only by bolts.

(*b*) A hinged door shall be fitted with catches workable from each side of the bulkhead.

(*c*) A sliding door may have a horizontal or vertical motion. If required to be hand operated only, the gearing shall be capable of being worked at the door itself and also at an accessible position above the bulkhead deck.

(*d*) If a door is required to be closed by dropping or by the action of a dropping weight, it shall be fitted with a suitable arrangement to regulate the closing movement, and the gearing shall be so arranged that the door can be released both at the door itself and at an accessible position above the bulkhead deck. Hand gear shall also be provided, so arranged as to operate at the door itself and above the bulkhead deck, and also, so that after being disengaged for dropping, it can be quickly re-engaged from either the upper or the lower position.

(*e*) If a door is required to be power operated from a central control, the gearing shall be so arranged that the door can be operated by power also at the door itself. The arrangements shall be such that the door will close automatically if opened by the local control after being closed from the central control, and also such that any door can be kept closed by local arrangements, which will prevent that door from being opened from the central control. Such power operated doors shall be provided with hand gear, workable both at the door itself and from an accessible position above the bulkhead deck.

(*f*) In all classes of doors indicators shall be fitted at all operating stations other than at the door itself, showing whether the door is opened or closed.

(7) (*a*) Hinged watertight doors in passenger, crew, and working spaces are only permitted above a deck, the underside of which, at its lowest point at side, is at least 7 feet (2·13 metres) above the deepest subdivision loadline, and they are not permitted in those spaces below such deck.

(*b*) Hinged watertight doors of satisfactory construction may be fitted in bulkheads dividing cargo between deck

spaces, in levels in which side cargo doors would be permitted under the provisions of Regulation X (11). These doors shall be closed before the voyage commences and shall be kept closed during the voyage, and the time of opening such doors in port and of closing them before the ship leaves port shall be entered in the official log book. Where it is proposed to fit such doors, the number and arrangements shall receive the special consideration of the Administration, and a statement shall be required from the owners certifying as to the absolute necessity of such doors.

(8) All other watertight doors shall be sliding doors.

(9) (*a*) When any watertight doors which may be sometimes opened at sea, excluding those at the entrances of tunnels, are fitted in the main transverse watertight bulkheads at such a height that their sills are below the deepest subdivision loadline, the following rules shall apply:—

(I) When the number of such doors exceeds 5 all the watertight sliding doors shall be power operated and shall be capable of being simultaneously closed from a station situated on the bridge, simultaneous closing of these doors being preceded by a warning sound signal.

(II) When the number of such doors does not exceed 5—

(i) if the criterion numeral does not exceed 30, all the watertight sliding doors may be operated by hand only;

(ii) if the criterion numeral exceeds 30, but does not exceed 60, all the watertight sliding doors may be either dropping doors fitted with releasing and hand gear operated at the door and from above the bulkhead deck or doors operated by power.

(iii) if the criterion numeral exceeds 60, all the watertight sliding doors shall be operated by power.

(*b*) If watertight doors which have sometimes to be open at sea for the purpose of trimming coal are fitted between bunkers in the between-decks below the bulkhead deck, these doors shall be operated by power. The opening and closing of these doors shall be recorded in the official log book.

(*c*) When trunkways in connection with refrigerated cargo are carried through more than one main transverse watertight bulkhead, and the sills of the openings are less than 7 feet (2·13 metres) above the deepest subdivision loadline, the watertight doors at such openings shall be operated by power.

(10) Portable plates on bulkheads shall not be permitted except in machinery spaces. Such plates shall always be in place before the ship leaves port, and shall not be removed

at sea except in case of urgent necessity. The necessary precautions shall be taken in replacing them to ensure that the joints shall be watertight.

(11) All watertight doors shall be kept closed during navigation except when necessarily opened for the working of the ship, and shall always be ready to be immediately closed.

(12) Where trunkways or tunnels for access from crew's accommodation to the stokehold, for piping, or for any other purpose are carried through main transverse watertight bulkheads, they shall be watertight and in accordance with the requirements of Regulation XII. The access to at least one end of each such tunnel or trunkway, if used as a passage at sea, shall be through a trunk extending watertight to a height sufficient to permit access above the margin line. The access to the other end of the trunkway or tunnel may be through a watertight door of the type required by its location in the ship. Such trunkways or tunnels shall not extend through the first subdivision bulkhead abaft the collision bulkhead.

Where it is proposed to fit tunnels or trunkways for forced draft, piercing main transverse watertight bulkheads, these shall receive the special consideration of the Administration.

Regulation X

Openings in Ship's Sides below the Margin Line

(1) The arrangement and efficiency of the means for closing any opening in the ship's sides shall be consistent with its intended purpose and the position in which it is fitted and generally to the satisfaction of the Administration.

(2) (*a*) If in a between decks, the sills of any sidescuttles are below a line drawn parallel to the bulkhead deck at side and having its lowest point 2½ per cent of the breadth of the ship above the deepest subdivision loadline, all sidescuttles in that between deck shall be of a non-opening type.

(*b*) If in a between decks, the sills of any sidescuttles other than those required to be of a non-opening type by sub-paragraph (*a*) are below a line drawn parallel to the bulkhead deck at side and having its lowest point at a height of 12 feet (3·66 metres) plus 2½ per cent of the breadth of the ship above the deepest subdivision loadline, all sidescuttles in that between decks shall be of such construction as will effectively prevent any person opening them without the consent of the master of the ship.

(*c*) Other sidescuttles may be of an ordinary opening type.

(*d*) If in a between decks, the sills of any of the sidescuttles referred to in sub-paragraph (*b*) are below a line drawn parallel to the bulkhead deck at side and having its lowest point $4\frac{1}{2}$ feet (1·37 metres), plus $2\frac{1}{2}$ per cent of the breadth of the ship above the loadline at which the ship is floating on her departure from any port, all the sidescuttles in that between decks shall be closed watertight and locked before the ship leaves port and they shall not be opened during navigation.

The time of opening such sidescuttles in port and of closing and locking them before the ship leaves port shall be entered in the official log book.

The Administration may indicate the limiting mean draught at which these sidescuttles will have their sills above the line defined in this paragraph and at which it will be permissible to open them at sea on the responsibility of the master. In tropical waters in fair weather this limiting draught may be increased by 1 foot (·305 metres).

(3) Efficient hinged inside deadlights arranged so that they can be easily and effectively closed and secured watertight shall be fitted to all sidescuttles—

(*a*) which are required to be of a non-opening type;

(*b*) which are to be fitted within one-eighth of the ship's length of the forward perpendicular;

(*c*) which are to be fitted in positions defined in sub-paragraph (2) (*b*);

(*d*) which will not be accessible during navigation;

(*e*) which are to be fitted in spaces intended for the accommodation of sailors and firemen;

(*f*) which are to be fitted in spaces intended for the accommodation of steerage passengers.

(4) Sidescuttles fitted below the bulkhead deck, other than those referred to in the preceding paragraph, shall be fitted with efficient inside deadlights which may be portable and stowed adjacent to the sidescuttles.

(5) Sidescuttles and their deadlights, which will not be accessible during navigation, shall be closed and secured before the ship proceeds to sea.

(6) No sidescuttles shall be fitted in any spaces which are appropriated exclusively to the carriage of cargo or coal.

(7) Automatic ventilating sidescuttles shall not be fitted in the ship's sides below the margin line without the special sanction of the Administration.

(8) All machinery and other inlets and discharges in the ship's sides shall be arranged so as to prevent the accidental admission of water into the ship.

(9) The number of scuppers, sanitary discharges and other similar openings in the ship's sides shall be reduced to the minimum either by making each discharge serve for as many as possible of the sanitary and other pipes, or in any other satisfactory manner.

(10) Discharges led through the ship's sides from spaces below the margin line shall be fitted with efficient and accessible means for preventing water from passing inboard. It is permissible to have for each separate discharge either one automatic non-return valve fitted with a positive means of closing it from above the bulkhead deck, or, alternatively, two automatic non-return valves without such means, the upper of which valves is so situated above the deepest subdivision loadline as to be always accessible for examination under service conditions.

Where a positive action valve is fitted, the operating position above the bulkhead deck shall always be readily accessible and means shall be provided for indicating whether the valve is open or closed.

(11) Gangway, cargo and coaling ports fitted below the margin line shall be of sufficient strength. They shall be effectively closed and secured watertight before the ship leaves port, and shall be kept closed during navigation.

Cargo and coaling ports which are to be fitted partly or entirely below the deepest subdivision loadline shall receive the special consideration of the Administration.

(12) The inboard opening of each ash-shoot, rubbish-shoot, etc., shall be fitted with an efficient cover.

If the inboard opening is situated below the margin line, the cover shall be watertight, and in addition an automatic non-return valve shall be fitted in the shoot in an easily accessible position above the deepest subdivision loadline. When the shoot is not in use both the cover and the valve shall be kept closed and secured.

Regulation XI

Construction and Initial Tests of Watertight Doors, Sidescuttles, Etc.

(1) The design, materials and construction of all watertight doors, sidescuttles, gangway, cargo and coaling ports, valves, pipes, ash-shoots and rubbish-shoots referred to in these Regulations shall be to the satisfaction of the Administration.

(2) Each watertight door shall be tested by water pressure to a head up to the margin line. The test shall be made before the ship is put in service, either before or after the door is fitted.

Regulation XII

Construction and Initial Tests of Watertight Decks, Trunks, Etc.

(1) Watertight decks, trunks, tunnels, duct keels and ventilators shall be of the same strength as watertight bulkheads at corresponding levels. The means used for making them watertight, and the arrangements adopted for closing openings in them, shall be to the satisfaction of the Administration. Watertight ventilators and trunks shall be carried at least up to the margin line.

(2) After completion a hose or flooding test shall be applied to watertight decks and a hose test to watertight trunks, tunnels and ventilators.

Regulation XIII

Periodical Operation and Inspection of Watertight Doors, Etc.

In all new and existing ships drills for the operating of watertight doors, sidescuttles, valves, and closing mechanisms of scuppers, ash-shoots and rubbish-shoots, shall take place weekly. In ships in which the voyage exceeds one week in duration a complete drill shall be held before leaving port, and others thereafter at least once a week during the voyage, provided that all watertight power doors and hinged doors, in main transverse bulkheads, in use at sea shall be operated daily.

The watertight doors and all mechanisms and indicators connected therewith, and all valves the closing of which is necessary to make a compartment watertight, shall be periodically inspected at sea, at least once a week.

Regulation XIV

Entries in the Official Log Book

In all new and existing ships hinged doors, portable plates, sidescuttles, gangway, cargo and coaling ports and other openings, which are required by these Regulations to be kept closed during navigation, shall be closed before the ship leaves port. The time of closing, and the time of opening (if permissible under these Regulations), shall be recorded in the official log book.

A record of all drills and inspections required by Regulation XIII shall be entered in the official log book with an explicit record of any defects which may be disclosed.

Regulation XV

Double Bottoms

(1) In ships 200 feet (61 metres) and under 249 feet (76 metres) in length a double bottom shall be fitted at least from the machinery space to the fore peak bulkhead, or as near thereto as practicable.

(2) In ships 249 feet (76 metres) and under 330 feet (100 metres) in length a double bottom shall be fitted at least outside the machinery space, and shall extend to the fore and after peak bulkheads, or as near thereto as practicable.

(3) In ships 330 feet (100 metres) in length and upwards a double bottom shall be fitted amidships, and shall extend to the fore and after peak bulkheads, or as near thereto as practicable.

(4) Where a double bottom is required to be fitted the inner bottom shall be continued out to the ship's sides in such a manner as to protect the bottom to the turn of bilge.

Such protection will be deemed satisfactory if the line of intersection of the outer edge of the margin plate with the bilge plating is not lower at any part than a horizontal plane passing through the point of intersection with the frame line amidships of a transverse diagonal line inclined at 25 degrees to the base line and cutting it at a point one-half the ship's moulded breadth from the middle line.

(5) Wells constructed in the double bottom in connection with the drainage arrangements shall not extend downwards more than necessary, nor shall they be less than 18 inches (457 millimetres) from the outer bottom or from the inner edge of the margin plate. A well extending to the outer bottom is, however, permitted at the after end of the shaft tunnel of screw ships.

Regulation XVI

Fire-resisting Bulkheads

Ships shall be fitted above the bulkhead deck with fire-resisting bulkheads which shall be continuous from side to side of the ship and arranged to the satisfaction of the Administration.

They shall be constructed of metal or other fire-resisting material, effective to prevent for one hour, under the conditions for which the bulkheads are to be fitted in the ship, the spread of fire generating a temperature of 1,500° F. (815° C.) at the bulkhead.

Steps and recesses and the means for closing all openings in these bulkheads shall be fire-resisting and flame-tight.

The mean distance between any two adjacent fire-resisting bulkheads in any superstructure shall in general not exceed 131 feet (40 metres).

Regulation XVII

Side and other Openings, Etc., above the Margin Line

(1) Sidescuttles, gangway, cargo and coaling ports, and other means for closing openings in the ship's sides above the margin line shall be of efficient design and construction and of sufficient strength having regard to the spaces in which they are fitted and their positions relative to the deepest subdivision loadline.

(2) The bulkhead deck or a deck above it shall be weathertight in the sense that in ordinary sea conditions water will not penetrate in a downward direction. All openings in the exposed weather deck shall have coamings of ample height and strength, and shall be provided with efficient means for expeditiously closing them weathertight.

(3) Freeing ports and/or scuppers shall be fitted as necessary for rapidly clearing the weather deck of water under all weather conditions.

Regulation XVIII

Exits from Watertight Compartments

(1) In passenger and crew spaces, practicable means of exit to the open deck shall be provided for the occupants from each watertight compartment.

(2) Practicable means of escape for the crew shall be provided from each engine room, shaft tunnel, stokehold compartment, and other working spaces, independent of watertight doors.

Regulation XIX

Pumping Arrangements

Steamships

(1) Ships shall be provided with an efficient pumping plant capable of pumping from and draining any watertight compartment under all practicable conditions after a casualty whether the ship is upright or listed. For this purpose wing suctions will generally be necessary except in narrow compartments at the ends of the ship. Where close ceiling is fitted over the bilges, arrangements shall be

made whereby water in the compartment may find its way to the suction pipes. Efficient means shall be provided for draining water from insulated holds.

(2) In addition to the ordinary bilge pump, worked by the main engines, or its equivalent engine room pump, two independent power bilge pumps shall be provided, except that in ships less than 300 feet (91·5 metres) in length, having a criterion numeral less than 30, either two efficient hand pumps of the crank type fitted one forward and one aft, or a portable power pump, may be substituted for one of the additional independent power bilge pumps.

In all cases an additional independent power pump shall be fitted when the criterion numeral exceeds 30.

Sanitary, ballast and general service pumps may be accepted as independent power bilge pumps if fitted with the necessary connections to the bilge pumping system.

(3) Where two or more independent power pumps are required, the arrangement shall be such that at least one power pump will be available for use in all ordinary circumstances in which a vessel may be flooded at sea. One of the power pumps, shall, therefore, be an emergency pump of a reliable submersible type. A source of power situated above the bulkhead deck shall be available for this pump in any case of emergency.

(4) Where practicable, the power bilge pumps shall be placed in separate watertight compartments so arranged or situated that these compartments will not readily be flooded by the same damage. If the engines and boilers are in two or more watertight compartments, the pumps available for bilge service shall be distributed through these compartments as far as is possible.

(5) With the exception of pumps which may be provided for peak compartments only, each bilge pump, whether operated by hand or by power, shall be arranged to draw water from any hold or machinery compartment in the ship.

(6) Each independent power bilge pump shall be capable of giving a speed of water through the main bilge pipe of not less than 400 feet (122 metres) per minute, and it shall have a separate direct suction, to the compartment in which it is situated, of a diameter not less than that of the bilge main. The direct suctions from each independent power bilge pump shall be arranged to pump from either side of the ship.

(7) Main circulating pumps shall have direct suction connections, provided with non-return valves, to the lowest drainage level in the machinery space, and of a diameter at least two-thirds that of the main sea inlet. Where the fuel is, or may be, coal, and there is no watertight bulk-

head between the engines and boilers, a direct discharge overboard shall be fitted from at least one circulating pump, or, alternatively, a bye-pass may be fitted to the circulating discharge.

(8) (*a*) All pipes from the pumps which are required for draining cargo or machinery spaces shall be entirely distinct from pipes which may be used for filling or emptying spaces where water or oil is carried.

(*b*) Lead pipes shall not be used under coal bunkers or oil fuel storage tanks, nor in boiler or machinery spaces, including motor rooms in which oil settling tanks or oil fuel pump units are situated.

(9) The Administration shall make rules relating to the diameters of the bilge main and branch pipes which shall be proportioned respectively in relation to the size of the ship and the sizes of the compartments to be drained.

(10) The arrangement of the bilge and ballast pumping system shall be such as to prevent the possibility of water passing from the sea and from water ballast spaces into the cargo and machinery spaces, or from one compartment to another. Special provision shall be made to prevent any deep tank having bilge and ballast connections being inadvertently run up from the sea when containing cargo, or pumped out through a bilge pipe when containing water ballast.

(11) Provision shall be made to prevent the compartment served by any bilge suction pipe being flooded, in the event of the pipe being severed or otherwise damaged, by collision or grounding, in any other compartment. For this purpose, where the pipe is at any part situated near the side of the ship or in a duct keel, there shall be fitted to the pipe in the compartment containing the open end either a non-return valve, or a screw-down valve which can be operated from a position above the bulkhead deck.

(12) All distribution boxes, cocks and valves in connection with the bilge pumping arrangement shall be in positions which are accessible at all times under ordinary circumstances. They shall be so arranged that in the event of flooding the emergency bilge pump may be operative on any compartment. If there is only one system of pipes common to all the pumps, the necessary cocks or valves for controlling the bilge suctions must be workable from above the bulkhead deck. If in addition to the main bilge pumping system an emergency bilge pumping system is provided, it shall be independent of the main system and so arranged that the emergency pump is capable of operating on any compartment under flooding conditions.

Motor Ships

(13) The bilge pumping arrangements in motor ships shall, so far as practicable, be equivalent to those required for steamships of similar size, except as regards main circulating pumps.

Regulation XX

Power for Going Astern

Ships shall have sufficient power for going astern to secure proper control of the ship in all circumstances.

Regulation XXI

Auxiliary Steering Apparatus

Ships shall be provided with an auxiliary steering apparatus which, however, may be of less power than the main apparatus, and need not be worked by steam or other mechanical power, provided adequate arrangements for manual operation are practicable. A duplicate main steering power plant shall be considered as an auxiliary steering apparatus within the meaning of this Regulation.

Regulation XXII

Initial and Subsequent Surveys of Ships

(1) Every new or existing ship shall be subjected to the surveys specified below:—

(*a*) A survey before the ship is put in service.

(*b*) A periodical survey once every twelve months.

(*c*) Additional surveys, as occasion arises.

(2) The surveys referred to above shall be carried out as follows:—

(*a*) *The survey before the ship is put in service* shall include a complete inspection of the hull, machinery and equipments, including the outside of the ship's bottom and the inside and outside of the boilers. This survey shall be such as to ensure that the arrangements, material, and scantlings of the hull boilers, and their appurtenances, main and auxiliary machinery, life-saving appliances, and other equipments, fully comply with the requirements of the present Convention and of the detailed regulations promulgated as a result thereof by the Government of the country to which the ship belongs for ships of the service for which it is intended. The survey shall also be such as to ensure that the workmanship of all parts of the ship and its equipments is in all respects satisfactory.

(*b*) *The periodical survey* shall include an inspection of the whole of the hull, boilers, machinery, and equipments, including the outside of the ship's bottom. The survey shall be such as to ensure that the ship, as regards the hull, boilers, and their appurtenances, main and auxiliary machinery, life-saving appliances, and other equipments, is in satisfactory condition and fit for the service for which it is intended, and that it complies with the requirements of the present Convention, and of the detailed regulations promulgated as a result thereof by the Government of the country to which the ship belongs.

(*c*) *A survey, either general or partial,* according to the circumstances, shall be made every time an accident occurs or a defect is discovered which affects the safety of the ship or the efficiency or completeness of its life-saving appliances or other equipments, or whenever any important repairs or renewals are made. The survey shall be such as to ensure that the necessary repairs or renewals have been effectively made, that the material and workmanship of such repairs or renewals are in all respects satisfactory, and that the ship complies in all respects with the provisions of the present Convention and of the detailed regulations promulgated as a result thereof by the Government of the country to which the ship belongs.

(3) The detailed regulations referred to in sub-paragraph (2) shall prescribe the requirements to be observed as to the initial and subsequent hydraulic tests to which the main and auxiliary boilers, connections, steam-pipes, high-pressure receivers, and fuel tanks for oil motors are to be submitted, including the test pressure to be applied, and the intervals between two consecutive tests.

Main and auxiliary boilers, connections, tanks and receivers, also steam-piping of more than 3 inches (76 millimetres) internal diameter shall be satisfactorily tested by hydraulic pressure when new. Steam pipes of more than 3 inches (76 millimetres) internal diameter shall be tested by hydraulic pressure periodically.

Regulation XXIII

Maintenance of Conditions after Survey

After the survey of the ship as provided in Regulation XXII has been completed no change shall be made in the structural arrangements, machinery, equipments, etc., covered by the survey, without the sanction of the Administration.

Regulation XXIV

Standard Types of Boats

The standard types of boats are classified as follows:—

Class I.—Open boats with rigid sides having either (*a*) internal buoyancy only, or (*b*) internal and external buoyancy.

Class II.—(*a*) Open boats with internal and external buoyancy—upper parts of sides collapsible, and (*b*) decked boats with either fixed or collapsible watertight bulwarks.

No boat may be approved the buoyancy of which depends upon the previous adjustment of one of the principal parts of the hull, or which has not a cubic capacity of at least 3·5 cubic metres (equivalent to 125 cubic feet).

No boat may be approved the weight of which when fully laden with persons and equipment exceeds 20,300 kilogrammes (equivalent to 20 tons).

Regulation XXV

Lifeboats of Class I

Lifeboats of Class I must have a mean sheer at least equal to four per cent of their length.

The air cases of lifeboats of Class I shall be so placed as to secure stability when fully laden under adverse weather conditions.

In boats certified to carry 100 or more persons the volume of the buoyancy shall be increased to the satisfaction of the Administration.

Lifeboats of Class I must also satisfy the following conditions:—

(a) *Lifeboats with Internal Buoyancy only*

The buoyancy of a wooden boat of this type shall be provided by watertight air-cases, the total volume of which shall be at least equal to one-tenth of the cubic capacity of the boat.

The buoyancy of a metal boat of this type shall not be less that that required above for a wooden boat of the same cubic capacity, the volume of watertight air-cases being increased accordingly.

(b) *Lifeboats with Internal and External Buoyancy*

The internal buoyancy of a wooden boat of this type shall be provided by watertight air-cases, the total volume of which is at least equal to seven and a half per cent of the cubic capacity of the boat.

The external buoyancy may be of cork or of any other equally efficient material, but such buoyancy shall not be obtained by the use of rushes, cork shavings, loose granulated cork or any other loose granulated substance, or by any means dependent upon inflation by air.

If the buoyancy is of cork, its volume, for a wooden boat, shall not be less than thirty-three thousandths of the cubic capacity of the boat; if of any material other than cork, its volume and distribution shall be such that the buoyancy and stability of the boat are not less than that of a similar boat provided with buoyancy of cork.

The buoyancy of a metal boat shall be not less than that required above for a wooden boat of the same cubic capacity, the volume of the watertight air-cases and that of the external buoyancy being increased accordingly.

Regulation XXVI

Boats of Class II

Boats of Class II must satisfy the following conditions:—

(a) *Open Boats with Internal and External Buoyancy—Upper Part of Sides Collapsible*

A boat of this type shall be fitted both with watertight air-cases and with external buoyancy the aggregate volume of which, for each person which the boat is able to accommodate, shall be at least equal to the following amounts:—

	Cubic. Decimetres.	Cubic. Feet.
Air-cases	43	1·5
External buoyancy (if of cork)	6	0·2

The external buoyancy may be of cork or of any other equally efficient material, but such buoyancy shall not be obtained by the use of rushes, cork shavings, loose granulated cork, or any other loose granulated substance, or by any means dependent upon inflation by air.

If of any material other than cork, its volume and distribution shall be such that the buoyancy and stability of the boat are not less than that of a similar boat provided with buoyancy of cork.

A metal boat of this type shall be provided with internal and external buoyancy to ensure that the buoyancy of the boat shall be at least equal to that of a wooden boat.

The minimum freeboard of boats of this type shall be fixed in relation to their length; and it shall be measured vertically to the top of the solid hull at the side amidships, from the water-level, when the boat is loaded.

The freeboard in fresh water shall not be less than the following amounts:—

Length of Lifeboat		Minimum Freeboard	
Metres	Equivalent in Feet to—	Millimetres	Equivalent in Inches to—
7·90	26	200	8
8·50	28	225	9
9·15	30	250	10

The freeboard of boats of intermediate length is to be found by interpolation.

The collapsible sides must be watertight.

(b) *Decked Boats with either Fixed or Collapsible Watertight Bulwarks*

(i) *Decked Boats having a Well Deck.*—The area of the well deck of a boat of this type shall be at least 30 per cent of the total deck area. The height of the well deck above the water-line at all points shall be at least equal to one-half per cent of the length of the boat, this height being increased to one-and-a-half per cent of the length of the boat at the ends of the well.

The freeboard of a boat of this type shall be such as to provide for a reserve buoyancy of at least 35 per cent.

(ii) *Decked Boats having a Flush Deck.*—The minimum freeboard of boats of this type is independent of their lengths and depends only upon their depths. The depth of the boat is to be measured vertically from the underside of the garboard strake to the top of the deck at the side amidships and the freeboard is to be measured from the top of the deck at the side amidships to the water-level when the boat is loaded.

The freeboard in fresh water shall not be less than the following amounts, which are applicable without correction to boats having a mean sheer equal to three per cent of their length:—

Depth of Lifeboat		Minimum Freeboard	
Millimetres	Equivalent in Inches to—	Millimetres	Equivalent in Inches to—
310	12	70	$2\frac{3}{4}$
460	18	95	$3\frac{3}{4}$
610	24	130	$5\frac{1}{8}$
760	30	165	$6\frac{1}{2}$

For intermediate depths the freeboard is obtained by interpolation.

If the sheer is less than the standard sheer defined above, the minimum freeboard is obtained by adding to the figures in the table one-seventh of the difference between the standard sheer and the actual mean sheer measured at the

stem and stern post; no deduction is to be made from the freeboard on account of the sheer being greater than the standard sheer or on account of the camber of the deck.

(iii) All decked lifeboats shall be fitted with efficient means for clearing the deck of water.

Regulation XXVII

Motor Boats

A motor boat carried as part of the lifesaving appliances of a vessel, whether required by Regulation XXXVI (2) or not, shall comply with the following conditions:—

(*a*) It shall comply with the requirements for a lifeboat of Class I, and proper appliances shall be provided for putting it into the water speedily.

(*b*) It shall be adequately provided with fuel, and kept so as to be at all times ready for use.

(*c*) The motor and its accessories shall be suitably enclosed to ensure operation under adverse weather conditions, and provision shall be made for going astern.

(*d*) The speed shall be at least six knots when fully loaded in smooth water.

The volume of the internal buoyancy and, where fitted, the external buoyancy shall be increased in sufficient proportion to compensate for the difference between the weight of the motor, the searchlight, and the wireless telegraph installation and their accessories, and the weight of the additional persons which the boat could accommodate if the motor, the searchlight and the wireless telegraph installation and their accessories were removed.

Regulation XXVIII

Life Rafts

No type of life raft may be approved unless it satisfies the following conditions:—

(*a*) It shall be of approved material and construction;

(*b*) It shall be effective and stable when floating either way up;

(*c*) It shall be fitted with fixed or collapsible bulwarks of wood, canvas or other suitable material on both sides;

(*d*) It shall have a line securely becketed round the outside;

(*e*) It shall be of such strength that it can be launched or thrown from the vessel's deck without being damaged, and if to be thrown it shall be of such size and weight that it can be easily handled;

(*f*) It shall have not less than 85 cubic decimetres (equivalent to three cubic feet)of air-cases or equivalent buoyancy for each person to be carried thereon;

(*g*) It shall have a deck area of not less than 3,720 square centimetres (equivalent to four square feet) for each person to be carried thereon, and it shall effectively support the occupants out of the water;

(*h*) The air-cases or equivalent buoyancy shall be placed as near as possible to the sides of the life raft, and such buoyancy shall not be by any means dependent on inflation by air.

Regulation XXIX

Buoyant Apparatus

Buoyant apparatus, whether buoyant deck seats, buoyant deck chairs or other buoyant apparatus, shall be deemed sufficient so far as buoyancy is concerned, for a person or number of persons to be ascertained by dividing the number of kilogrammes of iron which it is capable of supporting in fresh water by 14·5 (equivalent to the number of pounds divided by 32), and if the apparatus depends for its buoyancy on air it shall not require to be inflated before use in an emergency.

The number of persons for whom the apparatus is deemed suitable shall be determined by the least of the numbers ascertained either as above or by the number of 30·5 centimetres (equivalent to one foot) in the perimeter.

Such approved buoyant apparatus shall comply with the following conditions:—

1. It shall be constructed with proper workmanship and materials.
2. It shall be effective and stable when floating either way up.
3. It shall be of such size, strength and weight that it can be handled without mechanical appliances and, if necessary, thrown without damage from the vessel's deck on which it is stowed.
4. The air-cases or equivalent buoyancy shall be placed as near as possible to the sides of the apparatus.
5. It shall have a line securely becketed round the outside of the apparatus.

Regulation XXX

Cubic Capacity of Lifeboats of Class I

1. The cubic capacity of a lifeboat of Class I shall be determined by Stirling's (Simpson's) Rule or by any other method giving the same degree of accuracy. The capacity of a square-sterned boat shall be calculated as if the boat had a pointed stern.

2. For example, the capacity in cubic metres (or cubic feet) of a boat, calculated by the aid of Stirling's Rule, may be considered as given by the following formula:—

$$\text{Capacity} = \frac{l}{12}(4A + 2B + 4C)$$

l being the length of the boat in metres (or feet) from the inside of the planking or plating at the stem to the corresponding point at the stern post; in the case of a boat with a square stern, the length is measured to the inside of the transom.

A, B, C denote respectively the areas of the cross-sections at the quarter length forward, amidships, and the quarter length aft, which correspond to the three points obtained by dividing l into four equal parts (the areas corresponding to the two ends of the boat are considered negligible).

The areas A, B, C shall be deemed to be given in square metres (or square feet) by the successive application of the following formula to each of the three cross-sections:—

$$\text{Area} = \frac{h}{12}(a + 4b + 2c + 4d + e)$$

h being the depth measured in metres (or in feet) inside the planking or plating from the keel to the level of the gunwale, or, in certain cases, to a lower level, as determined hereafter.

a, b, c, d, e denote the horizontal breadths of the boat measured in metres (or in feet) at the upper and lower points of the depth and at the three points obtained by dividing h into four equal parts (a and e being the breadths at the extreme points, and c at the middle point, of h).

3. If the sheer of the gunwale, measured at the two points situated at a quarter of the length of the boat from the ends, exceeds 1 per cent of the length of the boat, the depth employed in calculating the area of the cross-sections A or C shall be deemed to be the depth amidships plus 1 per cent of the length of the boat.

4. If the depth of the boat amidships exceeds 45 per cent of the breadth, the depth employed in calculating the area of the midship cross-section B shall be deemed to be equal to 45 per cent of the breadth, and the depth employed in calculating the areas of the quarter length sec-

tions A and C is obtained by increasing this last figure by an amount equal to 1 per cent of the length of the boat, provided that in no case shall the depth employed in the calculation exceed the actual depths at these points.

5. If the depth of the boat is greater than 122 centimetres (equivalent to 4 feet) the number of persons given by the application of this rule shall be reduced in proportion to the ratio of 122 centimetres to the actual depth, until the boat has been satisfactorily tested afloat with that number of persons on board, all wearing life-jackets.

6. Each Administration shall impose, by suitable formulæ, a limit for the number of persons allowed in boats with very fine ends and in boats very full in form.

7. Each Administration reserves the right to assign to a boat a capacity equal to the product of the length, the breadth and the depth multiplied by 0·6 if it is evident that this formula does not give a greater capacity than that obtained by the above method. The dimensions shall then be measured in the following manner:—

Length.—From the intersection of the outside of the planking with the stem to the corresponding point at the stern post or, in the case of a square sterned boat, to the after side of the transom.

Breadth.—From the outside of the planking at the point where the breadth of the boat is greatest.

Depth.—Amidships inside the planking from the keel to the level of the gunwale, but the depth used in calculating the cubic capacity may not in any case exceed 45 per cent of the breadth.

In all cases the shipowner has the right to require that the cubic capacity of the boat shall be determined by exact measurement.

8. The cubic capacity of a motor boat is obtained from the gross capacity by deducting a volume equal to that occupied by the motor and its accessories, and, when carried, the wireless telegraphy installation and the searchlight with their accessories.

Regulation XXXI

Deck Area of Boats of Class II

1. The area of the deck of a decked boat shall be determined by the method indicated below or by any other method giving the same degree of accuracy. The same rule is to be applied in determining the area within the fixed bulwarks of a boat of Class II (a).

2. For example, the surface in square metres (or square feet) of a boat may be deemed to be given by the following formula:—

$$\text{Area} = \frac{l}{12}(2a+1\cdot5b+4c+1\cdot5d+2e)$$

l being the length in metres (or in feet) from the intersection of the outside of the planking with the stem to the corresponding point at the stern post.

a, b, c, d, e denote the horizontal breadths in metres (or in feet) outside the planking at the points obtained by dividing l into four equal parts and subdividing the foremost and aftermost parts into two equal parts (a and e being the breadths at the extreme subdivisions, c at the middle point of the length, and b and d at the intermediate points).

Regulation XXXII

Marking of Boats, Life Rafts and Buoyant Apparatus

The dimensions of the boat and the number of persons which it is authorized to carry, shall be marked on it in clear permanent characters. These marks shall be specifically approved by the officers appointed to inspect the ship.

Life rafts and buoyant apparatus shall be marked with the number of persons in the same manner.

Regulation XXXIII

Carrying Capacity of Boats

1. The number of persons which a boat of one of the standard types can accommodate is equal to the greatest whole number obtained by dividing the capacity in cubic metres (or cubic feet), or the surface in square metres (or square feet), of the boat by the standard unit of capacity, or unit of surface (according to circumstances), defined below for each type.

2. The standard units of capacity and surface for determining the number of persons are as follows:—

Unit of Capacity	Cubic Metres	Equivalent In Cubic Feet
Open boats, Class I (*a*)	0·283	10
Open boats, Class I (*b*)	0·255	9

Unit of Surface	Square Metres	Equivalent in Square Feet
Class II	0·325	3½

3. The Administration may accept, in place of 0·325 or 3½, as the case may be, a smaller divisor, if it is satisfied after trial that the number of persons for whom there is seating accommodation in the decked boat in question is

greater than the number obtained by applying the above divisor, provided always that the divisor adopted in place of 0·325 or 3½, as the case may be, may never be less than 0·280 or 3, as the case may be.

The Administration which accepts a lower divisor in this way shall communicate to the other Administrations particulars of the trial and drawings of the decked boat in question.

Regulation XXXIV

Capacity Limits

No boat shall be marked for a greater number of persons than that obtained in the manner specified in these Regulations.

This number shall be reduced—

(1) when it is greater than the number of persons for which there is proper seating accommodation; the latter number shall be determined in such a way that the persons when seated do not interfere in any way with the use of the oars;

(2) when, in the case of boats other than those of Class I, the freeboard when the boat is fully loaded is less than the freeboard laid down for each type respectively; the number shall be reduced until the freeboard when the boat is fully loaded is at least equal to the standard freeboard laid down above.

In boats of Class II (*b*) (i), the raised part of the deck at the sides may be regarded as affording seating accommodation.

Regulation XXXV

Equivalents for and Weight of the Persons

In the tests for determining the number of persons which a boat or life raft can accommodate, each person shall be assumed to be an adult person wearing a life-jacket.

In verifications of freeboard the decked boats shall be loaded with a weight of at least 75 kilogrammes (165 lbs.) for each adult person that the decked boat is authorized to carry.

In all cases two children under 12 years of age shall be reckoned as one person.

Regulation XXXVI

Equipment of Boats and Life Rafts

1. The normal equipment of every boat shall consist of:—

(*a*) A single banked complement of oars, two spare oars and a steering oar; one set and a half of thole pins or crutches; a boat hook.

(*b*) Two plugs for each plug hole (plugs are not required when proper automatic valves are fitted); a bailer and a galvanized iron bucket.
(*c*) A rudder and a tiller or yoke and yoke lines.
(*d*) Two hatchets.
(*e*) A lamp filled with oil and trimmed.
(*f*) A mast or masts with one good sail at least, and proper gear for each.
(*g*) An efficient compass.
(*h*) A life-line becketed round the outside.
(*i*) A sea-anchor.
(*j*) A painter.
(*k*) A vessel containing four and a half litres (equivalent to one gallon) of vegetable or animal oil. The vessel shall be so constructed that the oil can be easily distributed on the water, and so arranged that it can be attached to the sea-anchor.
(*l*) An airtight receptacle containing one kilogramme (equivalent to two pounds) of provisions for each person.
(*m*) A watertight receptacle provided with a dipper with lanyard containing one litre (equivalent to one quart) of fresh water for each person.
(*n*) At least one dozen self-igniting "red lights" and a box of matches in watertight containers.
(*o*) Half a kilogramme (equivalent to one pound) of condensed milk for each person.
(*p*) A suitable locker for the stowage of the small items of the equipment.
(*q*) Any boat which is certified to carry 100 or more persons shall be fitted with a motor and shall comply with the requirements of Regulation XXVII.

A motor lifeboat need not carry a mast or sails or more than half the complement of oars, but it shall carry two boathooks.

Decked lifeboats shall have no plug-hole, but shall be provided with at least two bilge-pumps.

In the case of a ship which carries passengers in the North Atlantic north of 35° North Latitude, only a proportion of the boats, to be fixed by the Administration, need be equipped with masts and sails, and only one-half of the quantity of condensed milk need be carried.

2. Where the number of lifeboats carried on a ship is more than 13, one shall be a motor boat, and where the number is more than 19, two shall be motor boats. These motor lifeboats shall be fitted with a wireless telegraph installation and a searchlight.

The wireless telegraph installation shall comply with conditions as to range and efficiency to be decided by each Administration.

The searchlight shall include a lamp of at least 80 watts, an efficient reflector and a source of power which will give effective illumination of a light coloured object over a width of about 18 metres (60 feet) at a distance of 180 metres (200 yards) for a total period of six hours, and it shall be capable of working for three hours continuously.

Where the power for the wireless equipment and the searchlight are derived from the same source, this shall be sufficient to provide for the adequate working of both appliances.

3. The normal equipment of every approved life raft shall consist of—

(*a*) Four oars.

(*b*) Five rowlocks.

(*c*) A self-igniting lifebuoy light.

(*d*) A sea-anchor.

(*e*) A painter.

(*f*) A vessel containing four and a half litres (equivalent to one gallon) of vegetable or animal oil. The vessel shall be so constructed that the oil can be easily distributed on the water, and so arranged that it can be attached to the sea-anchor.

(*g*) An airtight receptacle containing one kilogramme (equivalent to two pounds) of provisions for each person.

(*h*) A watertight receptacle provided with a dipper with lanyard containing one litre (equivalent to one quart) of fresh water for each person.

(*i*) At least one dozen self-igniting red lights and a box of matches in watertight containers.

4. In the case of a ship which is engaged in short international voyages, the Administration may exempt the boats from carrying the equipment specified under sub-paragraphs (*f*), (*l*) and (*o*) of paragraph 1 and from the requirements of paragraph 2, and may also exempt the life rafts from carrying the equipment specified in paragraph 3 (*g*).

Regulation XXXVII

Stowage and Handling of Boats and Life Rafts

1. Subject to the conditions of Regulation XXXVIII, the lifeboats may be stowed one above the other, or they may, subject to such conditions as the Administration may impose, be fitted one within another, but where boats so fitted require lifting before being launched they shall only be permitted if mechanical power appliances for lifting are provided.

2. The lifeboats and life rafts additional to boats stowed under boats attached to davits may be stowed across a deck, bridge or poop and so secured that they will have the best chance of floating free of the ship if there is no time to launch them.

3. As large a number as possible of the additional boats referred to in paragraph 2 shall be capable of being launched on either side of the ship by means of approved appliances for transferring them from one side of the deck to the other.

4. Boats may only be stowed on more than one deck on condition that proper measures are taken to prevent boats on a lower deck being fouled by those stowed on a deck above.

5. Boats shall not be placed in the bows of the ship or in any positions in which they would be brought into dangerous proximity to the propellers at the time of launching.

6. Davits shall be of approved form and so disposed on one or more decks that the boats placed under them can be safely lowered without interference from the operation of any other davits.

7. The davits, blocks, falls and all other gear shall be of such strength that the boats can be safely lowered with the full complement of persons and equipment, with the ship listed to 15 degrees either way. The falls shall be long enough to reach the water with the vessel at her lightest seagoing draught and with a list of 15 degrees.

8. The davits shall be fitted with gear of sufficient power to ensure that the boats, fully equipped and manned, but not otherwise loaded with passengers, can be turned out against the maximum list at which the lowering of the boats is possible.

9. The boats attached to the davits shall have the falls ready for service, and means shall be provided for speedily, but not necessarily simultaneously, detaching the boats from the falls.

10. Where more than one boat is served by the same set of davits, if the falls are of rope, separate falls shall be provided to serve each boat, but where wire falls are used with mechanical appliances for recovering them, separate falls need not be provided. The appliances used must be such as to ensure lowering the boats in turn and rapidly.

Where mechanical appliances are fitted for the recovery of the falls efficient hand gear shall also be provided.

11. On short international voyages where the height of the boat deck above the water line when the vessel is at her lightest seagoing draft does not exceed 4·5 metres (15 feet), the requirements as to strength of davits and turning-out gear in sub-paragraphs 7, 8 and 10 shall not apply.

Regulation XXXVIII

Number and Capacity of Boats, Life Rafts, Etc., and Davits

1. A ship shall be provided with sets of davits in accordance with its length as provided in Column A of the Table in Regulation XXXIX, provided that a number of sets of

davits greater than the number of boats necessary for the accommodation of all the persons on board shall not be required.

Each set of davits shall have a boat of Class I attached to it. If the lifeboats attached to davits do not provide sufficient accommodation for all the persons on board, additional lifeboats of one of the standard type shall be provided. One additional lifeboat shall, in the first place, be stowed under each of the boats attached to davits. After these have been fitted other boats shall be carried inboard, but an Administration may, if it is of opinion that life rafts will be more readily available and otherwise more satisfactory than these lifeboats in a case of emergency, allow life rafts to be carried provided that the total capacity of the boats on the ship will be at least up to the minimum capacity required by Column C of the Table in Regulation XXXIX.

When in the opinion of the Administration it is neither practicable nor reasonable to place on a ship the number of sets of davits required by Column A of the Table in Regulation XXXIX, the Administration may authorize, under exceptional conditions, a smaller number of sets of davits, provided always that this number shall never be less than the minimum number fixed by Column B of the Table and that the total capacity of the boats on the ship will be at least up to the minimum capacity required by Column C.

2. A ship engaged on short international voyages shall be provided with sets of davits in accordance with its length as provided in Column A of the Table in Regulation XXXIX. Each set of davits shall have a boat of Class I attached to it. If the lifeboats attached to davits do not provide the minimum cubic capacity specified in Column D of the Table in Regulation XXXIX or provide accommodation for all persons on board, additional lifeboats of one of the standard types, approved life rafts or other approved buoyant apparatus shall be provided, and the accommodation thus provided shall be sufficient for all on board.

When in the opinion of the Administration it is neither practicable nor reasonable to place on a ship engaged in short international voyages, the number of sets of davits required by Column A of the Table in Regulation XXXIX, the Administration may authorize, under exceptional conditions, a smaller number of sets of davits, provided always that this number shall never be less than the minimum number fixed by Column B of the Table, and that the total capacity of the boats on the ship will be at least up to the minimum capacity required by Column D.

Regulation XXXIX

Table relating to davits and lifeboat capacity

The following table fixes, according to the length of the ship—

(A) *The minimum number of sets of davits* to be provided to each of which must be attached a boat of Class I in accordance with Regulation XXXVIII above.

(B) *The smaller number of sets of davits which may be authorized exceptionally under* Regulation XXXVIII.

(C) *The minimum lifeboat capacity required,* including the lifeboats attached to davits and the additional boats, in accordance with Regulation XXXVIII.

(D) *The minimum lifeboat capacity* required for a ship engaged in short international voyages.

Registered Length of the Ship				(A) Minimum Number of Sets of Davits	(B) Smaller Number of Sets of Davits authorized exceptionally	(C) Minimum Capacity of Lifeboats		(D) Minimum Capacity of Lifeboats	
Metres		Feet				Cubic Metres	Cubic Feet	Cubic Metres	Cubic Feet
31 and under	37	100 and under	120	2	2	28	980	11	400
37 "	43	120 "	140	2	2	35	1,220	17	600
43 "	49	140 "	160	2	2	44	1,550	24	850
49 "	53	160 "	175	3	3	53	1,880	33	1,150
53 "	58	175 "	190	3	3	68	2,390	37	1,300
58 "	63	190 "	205	4	4	78	2,740	41	1,450
63 "	67	205 "	220	4	4	94	3,330	45	1,600
67 "	70	220 "	230	5	4	110	3,900	48	1,700
70 "	75	230 "	245	5	4	129	4,560	52	1,850
75 "	78	245 "	255	6	5	144	5,100	60	2,100
78 "	82	255 "	270	6	5	160	5,640	68	2,400
82 "	87	270 "	285	7	5	175	6,190	76	2,700
87 "	91	285 "	300	7	5	196	6,930	85	3,000
91 "	96	300 "	315	8	6	214	7,550	94	3,300
96 "	101	315 "	330	8	6	235	8,290	105	3,700
101 "	107	330 "	350	9	7	255	9,000	116	4,100
107 "	113	350 "	370	9	7	273	9,630	125	4,400
113 "	119	370 "	390	10	7	301	10,650	133	4,700
119 "	125	390 "	410	10	7	331	11,700	144	5,100
125 "	133	410 "	435	12	9	370	13,060	156	5,500
133 "	140	435 "	460	12	9	408	14,430	170	6,000
140 "	149	460 "	490	14	10	451	15,920	185	6,550
149 "	159	490 "	520	14	10	490	17,310	201	7,100
159 "	168	520 "	550	16	12	530	18,720	217	7,650
168 "	177	550 "	580	16	12	576	20,350		
177 "	186	580 "	610	18	13	620	21,900		
186 "	195	610 "	640	18	13	671	23,700		
195 "	204	640 "	670	20	14	717	25,350		
204 "	213	670 "	700	20	14	766	27,050		
213 "	223	700 "	730	22	15	808	28,560		
223 "	232	730 "	760	22	15	854	30,180		
232 "	241	760 "	790	24	17	908	32,100		
241 "	250	790 "	820	24	17	972	34,350		
250 "	261	820 "	855	26	18	1,031	36,450		
261 "	271	855 "	890	26	18	1,097	38,750		
271 "	282	890 "	925	28	19	1,160	41,000		
282 "	293	925 "	960	28	19	1,242	43,880		
293 "	303	960 "	995	30	20	1,312	46,350		
303 "	314	995 "	1,030	30	20	1,380	48,750		

Note on (A) and (B):—When the length of the ship exceeds 314 metres (equivalent to 1,030 feet) the Administration shall determine the minimum number of sets of davits for that ship, full particulars of its decision shall be communicated to the other Administrations.

Note on (C) and (D):—For the purposes of this table the capacity of a boat of Class II is obtained by multiplying the number of persons for which the boat is certified by 0·283 to obtain the capacity in cubic metres and by 10 to obtain the capacity in cubic feet.

Note on (D):—When the length of a ship is under 31 metres (equivalent to 100 feet) or over 168 metres (equivalent to 550 feet) the cubic capacity of the lifeboats shall be prescribed by the Administration.

Regulation XL

Life-Jackets and Life-Buoys

1. A life-jacket shall satisfy the following requirements:—

(*a*) It shall be constructed with proper workmanship and materials.

(*b*) It shall be capable of supporting in fresh water for 24 hours 7.5 kilogrammes of iron (equivalent to 16½ pounds);

(*c*) It shall be reversible.

Life-jackets the buoyancy of which depends on air compartments are prohibited.

2. A lifebuoy shall satisfy the following requirements:—

(*a*) It shall be of solid cork or any other equivalent material;

(*b*) It shall be capable of supporting in fresh water for 24 hours at least 14.5 kilogrammes (equivalent to 32 pounds) of iron.

Life-buoys filled with rushes, cork shavings or granulated cork, or any other loose granulated material, or whose buoyancy depends upon air compartments which require to be inflated, are prohibited.

3. The minimum number of life-buoys with which ships are to be provided is fixed by the following table:—

Length of the Ship		Minimum Number of Buoys
Metres	Equivalent in Feet	
Under 61	Under 200	8
61 and under 122	200 and under 400	12
122 and under 183	400 and under 600	18
183 and under 244	600 and under 800	24
244 and over	800 and over	30

4. All the buoys shall be fitted with beckets securely seized. At least one buoy on each side shall be fitted with a life-line of at least 27.5 metres (15 fathoms) in length. Not less than one-half of the total number of life-buoys, and in no case less than six, shall be provided with efficient self-igniting lights which cannot be extinguished in water, and these shall be kept near the buoys to which they belong, with the necessary means of attachment.

5. All the life-buoys and life-jackets shall be so placed as to be readily accessible to the persons on board; their position shall be plainly indicated so as to be known to the persons concerned.

The life-buoys shall always be capable of being rapidly cast loose and shall not be permanently secured in any way.

Regulation XLI

Certificated Lifeboatmen

In order to obtain the special lifeboatman's certificate provided for in Article 22 of the present Convention, the applicant must prove that he has been trained in all the operations connected with launching lifeboats and the use of oars; that he is acquainted with the practical handling of the boats themselves; and, further, that he is capable of understanding and answering the orders relative to lifeboat service.

There shall be for each boat or life-raft a number of lifeboatmen at least equal to that specified in the following table:—

If the Prescribed Complement is—	The Minimum Number of Certificated Lifeboatmen shall be—
Less than 41 persons	2
From 41 to 61 persons	3
From 62 to 85 persons	4
Above 85 persons	5

Regulation XLII

Manning of Boats

A deck officer or certificated lifeboatman shall be placed in charge of each boat or life-raft and a second in command shall also be nominated. The person in charge shall have a list of its crew, and shall see that the men placed under his orders are acquainted with their several duties.

A man capable of working the motor shall be assigned to each motor boat.

A man capable of working the wireless and searchlight installations shall be assigned to boats carrying this equipment.

The duty of seeing that the boats, life-rafts and buoyant apparatus and other lifesaving apparatus are at all times ready for use shall be assigned to one or more officers.

Regulation XLIII

Fire Detection and Extinction

1. An efficient patrol system shall be maintained, so that any outbreak of fire may be promptly detected. In addition, a fire alarm or fire detecting system shall be provided, which will automatically indicate or register at one or more points or stations, where it can be most quickly observed by officers and crew, the presence or indication of fire in any part of the ship not accessible to the patrol system.

2. Every ship shall be provided with powerful pumps, operated by steam or other means. On ships of less than 4,000 tons gross there shall be two, and on larger ships three of these pumps. Each of the pumps shall be capable of delivering a sufficient quantity of water in two powerful jets simultaneously in any given part of the ship, and shall be available for immediate use before the ship leaves port.

3. The service pipes shall permit of two powerful jets of water being simultaneously directed on any given part of a deck occupied by passengers and crew, when the watertight and fire-resisting doors are closed. The service pipes and hoses shall be of ample size and made of suitable material. The branches of the pipes shall be so placed on each deck that the fire hose can be easily coupled to them.

4. Provision shall be made whereby at least two powerful jets of water can be rapidly and simultaneously directed into any space containing cargo. In addition, arrangements shall be made whereby smothering gas sufficient to give a minimum volume of free gas equal to 30 per cent of the gross volume of the largest hold in the ship can be promptly conveyed by a permanent piping system into each compartment in which cargo is carried. Steam in adequately equivalent proportion may be accepted in place of smothering gas on steam-driven ships. Provision for the supply of smothering gas or steam need not be required in ships of less than 1,000 tons gross.

5. A sufficient number of portable fluid fire extinguishers shall be provided, at least two being carried in each machinery space.

6. Two equipments, consisting of a smoke helmet or breathing apparatus and a safety lamp, shall be carried on board, and kept in two widely separated places.

7. In steamships in which the main boilers are oil fired, there shall be provided in addition to means whereby two powerful jets of water may be rapidly and simultaneously directed into any part of the machinery spaces—

(*a*) Suitable conductors for spraying water on oil without undue disturbance of the surface.

(*b*) In each firing space, a receptacle containing 283 cubic decimetres (10 cubic feet) of sand, sawdust impregnated with soda, or other approved dry materials, and scoops for distributing the same.

(*c*) In each boiler room, and in each of the machinery spaces in which a part of the oil fuel installation is situated, two approved portable extinguishers of a type discharging froth or other approved medium suitable for quenching oil fires.

(*d*) Means whereby froth may be rapidly discharged and distributed over the whole of the lower part of the boiler room or of any one boiler room, if there are more than one, or of any machinery space in which oil fuel units or settling tanks are situated. The quantity of froth which can be discharged shall be ample to cover to a depth of 15·24 centimetres (6 inches) the whole area of the plating formed in any one compartment by the inner bottom plating, or by the shell plating of the vessel, if there is no double-bottom tank. If the engine and boiler rooms are not entirely separate, and fuel can drain from the boiler room bilges into the engine room, the combined engine and boiler rooms shall be considered as one compartment. The apparatus shall be operated and controlled from outside the compartment in which the fire may occur.

(*e*) In addition to the foregoing, one extinguisher of the froth type of at least 136 litres (30 gallons) capacity in steamships having one boiler room and two such extinguishers in steamships with more than one boiler room. These extinguishers shall be provided with hoses on reels suitable for reaching any part of the boiler rooms and spaces containing oil-fuel pumping units. Equally efficient apparatus may be accepted in place of the 136 litres (30-gallons) extinguishers.

(*f*) All containers and valves by which they are operated shall be easily accessible and so placed that they will not readily be cut off from use by an outbreak of fire.

8. In vessels propelled by internal combustion engines there shall be provided in each of the machinery spaces, in addition to means whereby two powerful jets of water may be rapidly and simultaneously directed into any part of the machinery spaces, together with suitable spraying conductors, froth extinguishers as follows:—

(*a*) At least one approved 45 litres (10-gallons) extinguisher with an addition of one approved 9 litres (2-gallons) extinguisher for each 1,000 B.H.P. of the engines, but the total number of 9 litres (2 gallons) extinguishers so supplied shall be not less than two and need not exceed six.

(*b*) When a donkey boiler is situated in the machinery space there shall be provided, in place of the 45 litres (10-gallons) extinguisher mentioned above, one of 136 litres (30 gallons) capacity, fitted with suitable hose attachments or other approved methods for distributing the froth.

9. In steamships using oil fuel, if the engine and boiler rooms are not entirely separated by a steel bulkhead, and if fuel oil can drain from the boiler room bilges into the

engine room, one of the fire pumps shall be situated in the tunnel or other space outside the machinery compartment. When more than two pumps are required they shall not all be fitted in the same space.

10. Where any special type of appliance, extinguishing medium or arrangement is specified, any other type of appliance, etc., may be allowed, provided that it is not less effective than the specified one. For example—a Carbon Dioxide system may be accepted in place of a froth installation (paragraph (7), sub-paragraphs (*d*) and (*e*)), provided that the quantity of carbon dioxide carried is sufficient to give a gas saturation of about 25 per cent for the gross volume of the stokehold to about the top of the boilers.

11. All the fire-extinguishing appliances shall be thoroughly examined at least once each year by a surveyor appointed by the Administration.

Regulation XLIV

Muster List

The muster list shall assign duties to the different members of the crew in connection with—

(*a*) The closing of the watertight doors, valves, etc.

(*b*) The equipment of the boats, life rafts and buoyant apparatus generally.

(*c*) The launching of the boats attached to davits.

(*d*) The general preparation of the other boats, the life rafts, and buoyant apparatus.

(*e*) The muster of the passengers.

(*f*) The extinction of fire.

The muster list shall assign to the members of the stewards' department their several duties in relation to the passengers at a time of emergency. These duties shall include:—

(*a*) Warning the passengers.

(*b*) Seeing that they are dressed and have put on their life-jackets in a proper manner.

(*c*) Assembling the passengers at muster stations.

(*d*) Keeping order in the passages and on the stairways, and, generally, controlling the movements of the passengers.

The muster list shall specify definite signals for calling all the crew to their boat and fire stations, and shall give full particulars of these signals.

Regulation XLV

Muster and Drills

Musters of the crew for boat drill shall take place weekly when practicable, and in vessels in which the voyage exceeds one week, before leaving port. The dates upon which musters are held shall be recorded in the Offical Log Book and, if in any week a muster is not held, an entry shall be made stating why a muster was not practicable.

In ships in which the voyage exceeds one week practice musters of passengers should be held at an early period of each voyage.

Different groups of boats shall be used in turn at successive boat drills. The drills and inspections shall be so arranged that the crew thoroughly understand and are practised in the duties they have to perform, and that all life-saving appliances with the gear appertaining to them are always ready for immediate use.

The emergency signal for summoning passengers to muster stations shall be a succession of more than six short blasts followed by one long blast on the whistle or syren. This shall be supplemented on all ships except those engaged in short international voyages by other electrically operated signals throughout the ship controlled from the bridge. The meaning of all signals affecting passengers shall be clearly stated in different languages on cards posted in their cabins and in other passenger quarters.

SAFETY OF NAVIGATION

Regulation XLVI

Transmission of Information

The transmission of information regarding ice, derelicts, tropical storms or any other direct danger to navigation is obligatory. The form in which the information is sent is not obligatory. It may be transmitted either in plain language (preferably English) or by means of the International Code of Signals (Wireless Telegraphy Section). It should be issued CQ to all ships, and should also be sent to the first point of the coast to which communication can be made with a request that it be transmitted to the appropriate authority.

All messages issued under Article 34 of the present Convention will be preceded by the safety signal TTT followed by an indication of the nature of the danger, thus: TTT Ice; TTT Derelict; TTT Storm; TTT Navigation.

Informaton Required

The following information is desired, the time in all cases being Greenwich Mean Time:—

(*a*) *Ice, Derelicts and other Direct Dangers to Navigation.*

(1) the kind of ice, derelict or danger observed;

(2) the position of the ice, derelict or danger when last observed;

(3) the time and date when the observation was made.

(*b*) *Tropical Storms.*—(Hurricanes in the West Indies, Typhoons in the China Seas, Cyclones in Indian waters, and storms of a similar nature in other regions.)

(1) *A Statement that a Tropical Storm has been Encountered.*—This obligation should be interpreted in a broad spirit, and information transmitted whenever the master has good reason to believe that a tropical storm exists in his neighbourhood.

(2) *Meteorological Information.*—In view of the great assistance given by accurate meteorological data in fixing the position and movement of storm centres, each shipmaster should add to his warning message as much of the following meteorological information as he finds practicable:—

(*a*) barometric pressure (millibars, inches or millimetres);

(*b*) change in barometric pressure (the change during the previous two to four hours);

(*c*) wind direction (true not magnetic);

(*d*) wind force (Beaufort or decimal scale);

(*e*) state of the sea (smooth, moderate, rough, high);

(*f*) swell (slight, medium, heavy) and the direction from which it comes.

When barometric pressure is given the word "millibars," "inches" or "millimetres," as the case may be, should be added to the reading, and *it should always be stated whether the reading is corrected or uncorrected.*

When changes of the barometer are reported the course and speed of the ship should also be given.

All directions should be true, not magnetic.

(3) *Time and Date and Position of the Ship.*—These should be for the time and position when the metorological observations reported were made and not when the message was prepared or despatched. The time used in all cases should be Greenwich Mean Time.

(4) *Subsequent Observations.*—When a master has reported a tropical storm it is desirable, but not obligatory, that other observations be made and transmitted at intervals of three hours, so long as the ship remains under the influence of the storm.

Examples

Ice

TTT Ice. Large berg sighted in 4605 N., 4410 W., at 0800 GMT. May 15.

Derelict

TTT Derelict. Observed derelict almost submerged in 4006 N., 1243 W., at 1630 GMT. April 21.

Danger to Navigation

TTT Navigation. Alpha lightship not on station. 1800 GMT. January 3.

Tropical Storm

TTT Storm. Experiencing tropical storm. Barometer corrected 994 millibars, falling rapidly. Wind NW., force 9, heavy squalls. Swell E. Course ENE., 5 knots. 2204 N., 11354 E. 0030 GMT. August 18.

TTT Storm. Appearances indicate approach of hurricane. Barometer corrected 29.64 inches falling. Wind NE., force 8. Swell medium from NE. Frequent rain squalls. course 35°, 9 knots. 2200 N., 7236 W. 1300 GMT. September 14.

TTT Storm. Conditions indicate intense cyclone has formed. Wind S. by W. force 5. Barometer uncorrected 753 millimetres, fell 5 millimetres last three hours. Course N. 60 W., 8 knots. 1620 N., 9302 E. 0200 GMT. May 4.

TTT Storm. Typhoon to south-east. Wind increasing from N. and barometer falling rapidly. Position 1812 N., 12605 E. 0300 GMT. June 12.

CERTIFICATES

REGULATION XLVII

Form of Safety Certificate for Passenger Ships

SAFETY CERTIFICATE

(Official Seal.) *(Country.)*

for an / a short ——— international voyage.

Issued under the provisions of the

INTERNATIONAL CONVENTION FOR SAFETY OF LIFE AT SEA, 1929

Name of Ship.	Distinctive Number or Letters.	Port of Registry.	Gross Tonnage.

The *(Name)* Government certifies

I, the undersigned, *(Name)* certify

I. That the above-mentioned ship has been duly surveyed in accordance with the provisions of the International Convention referred to above.

II. That the survey showed that the ship complied with the requirements of the said Convention as regards—

(1) The hull, main and auxiliary boilers and machinery;

(2) the watertight subdivision arrangements and details;

(3) the following subdivision loadlines:—

Subdivision loadlines assigned and marked on the ship's side at amidships (Convention Article 5).	Freeboard.	To apply when the spaces in which passengers are carried include the following alternative spaces.
C. 1	....	....
C. 2	....	....
C. 3	....	....

(4) the boats, life-rafts and life-saving appliances which provide for a total number (crew and passengers) of ..... persons, and no more, viz:—

..... boats capable of accommodating....persons
..... life rafts " " .... "
..... buoyant apparatus capable of supporting .... persons.
..... life-buoys.
..... life-jackets.
..... certificated lifeboatmen.

(5) the radiotelegraph installations:—

—	Requirements of Articles.....of the said Convention.	Actual provision
Hours of watch	....	....
Whether approved auto-alarm fitted	....	....
Whether separate emergency installation fitted	....	....
Minimum number of operators	....	....
Additional operators or watchers	....	....
Whether direction-finding apparatus fitted	....	....

III. That in all other respects the ship complies with the requirements of the said Convention, so far as those requirements apply thereto.

This certificate is issued under the authority of the Government. It will remain in force until

Issued at the day of

Here follows the seal or signature of the authority entitled to issue this certificate.

(Seal.)

If signed, the following paragraph is to be added:—

The undersigned declares that he is duly authorized by the said Government to issue this certificate.

(Signature.)

Form of Safety Radiotelegraphy Certificate

SAFETY RADIOTELEGRAPHY CERTIFICATE

(Official Seal.) *(Country.)*

Issued under the provisions of the

INTERNATIONAL CONVENTION FOR SAFETY OF LIFE AT SEA, 1929

Name of Ship	Distinctive Number or Letters	Port of Registry	Gross Tonnage

The *(Name)* Government certifies

I, the undersigned, *(Name)* certify

That the above-mentioned ship complies with the provisions of the International Convention referred to above as regards Radiotelegraphy:—

—	Requirements of Articles.....of the said Convention.	Actual Provision.
Hours of watch	....	....
Whether approved auto-alarm fitted	....	....
Whether separate emergency installation fitted	....	....
Minimum number of operators	....	....
Additional operators or watchers	....	....
Whether direction-finding apparatus fitted	....	....

This certificate is issued under the authority of the Government. It will remain in force until

Issued at the day of

Here follows the seal or signature of the authority entitled to issue this certificate.

(Seal.)

If signed, the following paragraph is to be added:—

The undersigned declares that he is duly authorized by the said Government to issue this certificate.

(Signature.)

Form of Exemption Certificate

EXEMPTION CERTIFICATE

(Official Seal.) *(Country.)*

Issued under the provisions of the

INTERNATIONAL CONVENTION FOR SAFETY OF LIFE AT SEA, 1929

Name of Ship.	Distinctive Number or Letters.	Port of Registry.	Gross Tonnage.

The *(Name)* Government certifies

I, the undersigned, *(Name)* certify

That the above-mentioned ship is under the authority conferred by Article ..... of the International Convention referred to above exempted from the requirements of †.....of the Convention on the voyages.....

to .....

* Insert here the conditions, if any, on which the exemption certificate is granted. *

This certificate is issued under the authority of the Government. It will remain in force until

Issued at the day of

Here follows the seal or signature of the authority entitled to issue this certificate.

(Seal.)

If signed, the following paragraph is to be added:

The undersigned declares that he is duly authorized by the said Government to issue this certificate.

(Signature.)

† Insert here references to Articles and Regulations, specifying particular paragraphs.

ANNEX II

INTERNATIONAL REGULATIONS FOR PREVENTING COLLISIONS AT SEA

PRELIMINARY

These Rules shall be followed by all vessels upon the high seas and in all waters connected therewith, navigable by sea-going vessels.

In the following Rules every steam vessel which is under sail and not under steam is to be considered a sailing vessel, and every vessel under steam, whether under sail or not, is to be considered a steam vessel.

The words " steam vessel " shall include any vessel propelled by machinery.

The term " under steam " shall mean under any mechanical power.

A vessel is " under way " within the meaning of these Rules when she is not at anchor or made fast to the shore or aground.

The length of a vessel shall be deemed to be the length appearing in her certificate of registry.

RULES CONCERNING LIGHTS, ETC.

The word " visible " in these Rules, when applied to lights, shall mean visible on a dark night with a clear atmosphere.

Article 1

The Rules concerning lights shall be complied with in all weathers from sunset to sunrise, and during such time no other lights which may be mistaken for the prescribed lights *or impair their visiblity* shall be exhibited.

Article 2

A steam vessel when under way shall carry:—

(*a*) On or in front of the foremast, or if a vessel without a foremast, then in the fore part of the vessel, ~~at a height above the hull of not less than 20 feet, and if the breadth of the vessel exceeds 20 feet, then at a height above the hull not less than such breadth, so, however, that the light need not be carried at a greater height above the hull than 40 feet,~~ a bright white light, so constructed as to show an unbroken light over an arc of the horizon of 20 points of the compass, so fixed as to throw the light 10

points on each side of the vessel, viz., from right ahead to 2 points abaft the beam on either side, and of such a character as to be visible at a distance of at least 5 miles.

(*b*) *Either forward or aft of the white light mentioned in subdivision (a) a second white light similar in construction and character to that light.*

Vessels of less than 150 feet in length shall not be required to carry this second white light, but may do so.

(*c*) *These two white lights shall be so placed in line with the keel that one shall be at least 15 feet higher than the other and in such a position that the lower light shall be forward of the upper one, and higher than the lights mentioned in Article 2* (d) *and* (e). *The vertical distance between the two white lights shall be less than the horizontal distance. The lower of these two white lights, or if only one is carried, then that light, shall be placed at a height above the hull of not less than 20 feet, and, if the breadth of the vessel exceeds 20 feet, then at a height above the hull not less than such breadth, so, however, that the light need not be carried at a greater height above the hull than 40 feet.*

(~~b~~) (*d*) On the starboard side a green light so constructed as to show an unbroken light over an arc of the horizon of 10 points of the compass, so fixed as to throw the light from right ahead to 2 points abaft the beam on the starboard side, and of such a character as to be visible at a distance of at least 2 miles.

(~~c~~) (*e*) On the port side a red light so constructed as to show an unbroken light over an arc of the horizon of 10 points of the compass, so fixed as to throw the light from right ahead to 2 points abaft the beam on the port side, and of such a character as to be visible at a distance of at least 2 miles.

(~~d~~) (*f*) The said green and red side lights shall be fitted with inboard screens projecting at least 3 feet forward from the light, so as to prevent these lights from being seen across the bow.

(e)~~—A steam vessel when under way may carry an additional white light similar in construction to the light mentioned in subdivision (a). These two lights shall be so placed in line with the keel that one shall be at least 15 feet higher than the other, and in such a position with reference to each other that the lower light shall be forward of the upper one. The vertical distance between these lights shall be less than the horizontal distance.~~

In naval vessels of special construction in which it is not possible to comply fully with the provisions of this Article as to the position of lights or their range of visibility, those provisions shall be followed as closely as circumstances will permit.

ARTICLE 3

A steam vessel when towing another vessel shall, in addition to her side lights, carry two bright white lights in a vertical line one over the other, not less than 6 feet apart, and when towing more than one vessel shall carry an additional bright white light 6 feet above or below such lights, if the length of the tow, measuring from the stern of the towing vessel to the stern of the last vessel towed, exceeds 600 feet. Each of these lights shall be of the same construction and character, and *one of them* shall be carried in the same position as the white light mentioned in Article 2 (*a*), ~~except the additional light which may~~ *and the lowest light shall* be carried at a height of not less than 14 feet above the hull.

~~Such steam vessel~~ *The vessel towing and the vessels towed, except the last vessel of the tow,* may carry *in lieu of the light required in Article* 10, a small white light abaft the funnel or aftermast, for the ~~vessel towed~~ tow to steer by, but such light shall not be visible forward of the beam.

ARTICLE 4

(*a*) A vessel which ~~from any accident~~ is not under command shall carry ~~at the same height as the white light mentioned in Article 2 (a),~~ where they can best be seen and, if a steam vessel, in lieu of ~~that light~~ *the lights required in Article* 2 (a) *and* (b), two red lights, in a vertical line one over the other, not less than 6 feet apart, *so placed that the lower light shall not be less than* 14 *feet above the hull,* and of such a character as to be visible all round the horizon at a distance of at least 2 miles; and shall by day carry in a vertical line, one over the other not less than 6 feet apart, where they can best be seen, two black balls or shapes each 2 feet in diameter.

(*b*) A vessel employed in laying or in picking up a ~~telegraph~~ *submarine* cable shall carry ~~in the same position as the white light mentioned in Article 2 (a), and if a steam vessel,~~ in lieu of ~~that light~~ *the lights required in Article* 2 (a) and (b), three lights in a vertical line, one over the other, not less than 6 feet apart, *so placed that the lowest of these lights shall be not less than* 14 *feet above the hull.* The highest and lowest of these lights shall be red, and the middle light shall be white, and they shall be of such a character as to be visible all round the horizon, at a distance of at least 2 miles. By day she shall carry in a vertical line, one over the other, not less than 6 feet apart, where they can best be seen, three shapes not less than 2 feet in diameter, of which the highest and lowest shall be globular in shape and red in colour, and the middle one diamond in shape and white.

(*c*) The vessels referred to in this Article, when not making way through the water, shall not carry the side-lights, but when making way shall carry them.

(*d*) The lights and shapes required to be shown by this Article are to be taken by other vessels as signals that the vessel showing them is not under command and cannot therefore get out of the way.

These signals are not signals of vessels in distress and requiring assistance. Such signals are contained in Article 31.

ARTICLE 5

A sailing vessel under way, and any vessel being towed, shall carry the same lights as are prescribed by Article 2 for a steam vessel under way, with the exception of the white lights mentioned therein, which they shall never carry.

ARTICLE 6

Whenever, as in the case of small vessels under way during bad weather, the green and red side lights cannot be fixed, these lights shall be kept at hand lighted and ready for use; and shall, on the approach of or to other vessels, be exhibited on their respective sides in sufficient time to prevent collision, in such manner as to make them most visible, and so that the green light shall not be seen on the port side nor the red light on the starboard side, nor, if practicable, more than 2 points abaft the beam on their respective sides.

To make the use of these portable lights more certain and easy, the lanterns containing them shall each be painted outside with the colour of the light they respectively contain, and shall be provided with proper screens.

ARTICLE 7

Steam vessels of less than 40, and vessels under oars or sails of less than 20, tons gross tonnage, respectively, and rowing boats, when under way, shall not be ~~obliged~~ *required* to carry the lights mentioned in Article 2 (~~a~~), (~~b~~) ~~and~~ (~~c~~), but if they do not carry them they shall be provided with the following lights:—

1. Steam vessels of less than 40 tons shall carry:

(*a*) In the fore part of the vessel, ~~or~~ on or in front of the funnel, where it can best be seen, and at a height above the gunwale of not less than 9 feet, a bright white light constructed and fixed as prescribed in Article 2 (*a*), and of such a character as to be visible at a distance of at least ~~2~~ *3* miles.

(*b*) Green and red side-lights constructed and fixed as prescribed in Article 2 (~~b~~) ~~and~~ (e), (*d*) and (*e*), and of such a character as to be visible at a distance of at least 1 mile, or a combined lantern showing a green light and a red light from right ahead to 2 points abaft the beam on their respective sides. Such lantern shall be carried not less than 3 feet below the white light.

2. Small steamboats, such as are carried by sea-going vessels, may carry the white light at a less height than 9 feet above the gunwale, but it shall be carried above *the side-lights or* the combined lantern, mentioned in subdivision 1 (*b*).

3. Vessels under oars or sails, of less than 20 tons, shall ~~have ready at hand~~ *if they do not carry the side-lights, carry, where it can best be seen,* a lantern ~~with~~ *showing* a green ~~glass~~ *light* on one side and a red ~~glass~~ *light* on the other, ~~which, on the approach of or to other vessels, shall be exhibited in sufficient time to prevent collision,~~ *of such a character as to be visible at a distance of at least 1 mile* so that the green light shall not be seen on the port side nor the red light on the starboard side; *provided that, where it is not possible to fix this light, it shall be kept lighted and ready for use, and shall be exhibited in sufficient time to prevent collision.*

4. *Small* rowing boats, whether under oars or sail, shall *only be required to* have ready at hand a *lighted* lantern showing a white light, which shall be temporarily exhibited in sufficient time to prevent collision.

The vessels referred to in this Article shall not be obliged to carry the lights prescribed by Article 4 (*a*), and Article 11, last paragraph.

Article 8

Sailing pilot-vessels, when engaged on their station on pilotage duty, *and not at anchor,* shall not show the lights required for other vessels, but shall carry a white light at the masthead, visible all round the horizon, *at a distance of at least 3 miles,* and shall also exhibit a flare-up light or flare-up lights at short intervals, which shall never exceed ~~fifteen~~ *ten* minutes.

On the near approach of or to other vessels they shall have their sidelights lighted, ready for use, and shall flash or show them at short intervals, to indicate the direction in which they are heading, but the green light shall not be shown on the port side, nor the red light on the starboard side.

A *sailing* pilot-vessel of such a class as to be obliged to go alongside of a vessel to put a pilot on board may show the white light instead of carrying it at the masthead, and may, instead of the ~~coloured~~ *side*-lights above mentioned,

have at hand, ready for use, a lantern with a green glass on the one side and a red glass on the other, to be used as prescribed above.

A steam pilot-vessel ~~exclusively employed for the service of pilots licensed or certified by any pilotage authority or the Committee of any pilotage district,~~ when engaged on her station on pilotage duty and not at anchor, shall, in addition to the lights *and flares* required for ~~all pilot boats~~ *sailing pilot-vessels*, carry at a distance of eight feet below her white mast head light, a red light, visible all round the horizon ~~and of such a character as to be visible on a dark night with a clear atmosphere~~ at a distance of at least ~~two~~ *three* miles, and also the ~~coloured~~ side-lights required to be carried by vessels when under way.

All pilot-vessels, when engaged on their stations on pilotage duty and at anchor, shall carry the lights and show the flares prescribed above, except that the side-lights shall not be shown.

When not engaged on their stations on pilotage duty, they shall carry the same lights as other vessels of their class and tonnage.

~~When engaged on her station on pilotage duty and at anchor she shall carry, in addition to the lights required for all pilot boats, the red light above mentioned, but not the coloured side lights.~~

~~Pilot vessels, when not engaged on their station on pilotage duty, shall carry lights similar to those of other vessels of their tonnage.~~

ARTICLE 9*†

Fishing-vessels and fishing-boats, when under way and when not required by this Article to carry or show the lights hereinafter specified, shall carry or show the lights prescribed for vessels of their tonnage under way.

(*a*) Open boats, by which it is to be understood boats not protected from the entry of sea water by means of a continuous deck, when engaged in any fishing at night with outlying tackle extending not more than 150 feet horizontally from the boat into the seaway, shall carry one all-round white light.

Open boats, when fishing at night, with outlying tackle extending more than 150 feet horizontally from the boat into the seaway, shall carry one all-round white light, and, in addition, on approaching or being approached by other vessels, shall show a second white light at least 3 feet below the first light and at a horizontal distance of at least

* This article does not apply to Chinese or Siamese vessels.

† The expression "Mediterranean Sea" contained in sub-sections (*b*) and (*c*) of this Article includes the Black Sea and the other adjacent inland seas in communication with it.

5 feet away from it in the direction in which the outlying tackle is attached.

The lights mentioned in this sub-division shall be of such a character as to be visible at a distance of at least 2 miles.

*(*b*) Vessels and boats, except open boats as defined in sub-division (*a*), when fishing with drift-nets, shall, so long as the nets are wholly or partly in the water, carry two white lights where they can best be seen. Such lights shall be placed so that the vertical distance between them shall be not less than 6 feet and not more than 15 feet, and so that the horizontal distance between them, measured in a line with the keel, shall be not less than 5 feet and not more than 10 feet. The lower of these two lights shall be in the direction of the nets, and both of them shall be of such a character as to show all round the horizon, and to be visible at a distance of not less than 3 miles.

Within the Mediterranean Sea and in the seas bordering the coasts of Japan and Korea,† sailing fishing-vessels of less than 20 tons gross tonnage shall not be obliged to carry the lower of these two lights; should they, however, not carry it, they shall show in the same position (in the direction of the net or gear) a white light visible at a distance of not less than one sea mile on the approach of or to other vessels.

(*c*) Vessels and boats, except open boats as defined in sub-division (*a*), when line-fishing with their lines out and attached to or hauling their lines, and when not at anchor or stationary within the meaning of sub-division (*h*), shall carry the same lights as vessels fishing with drift-nets. When shooting lines, or fishing with towing lines, they shall carry the lights prescribed for a steam or sailing vessel under way respectively.

Within the Mediterranean Sea and in the seas bordering the coasts of Japan and Korea,† sailing fishing vessels of less than 20 tons gross tonnage shall not be obliged to carry the lower of these two lights; should they, however, not carry it, they shall show in the same position (in the direction of the lines) a white light, visible at a distance of not less than one sea mile on the approach of or to other vessels.

(*d*) Vessels, when engaged in trawling, by which is meant the dragging of an apparatus along the bottom of the sea—

1. If steam vessels, shall carry in the same position as the white light mentioned in Article 2 (*a*), a tri-coloured

* Dutch vessels and boats when engaged in the "kol," or hand-line, fishing will carry the lights prescribed for vessels fishing with drift-nets.

† Also, as regards Russian vessels, in the seas (excluding the Baltic) bordering the coasts of Russia.

lantern so constructed and fixed as to show a white light from right ahead to two points on each bow, and a green light and a red light over an arc of the horizon from two points on each bow to two points abaft the beam on the starboard and port sides respectively; and not less than 6 nor more than 12 feet below the tri-coloured lantern a white light in a lantern, so constructed as to show a clear, uniform and unbroken light all round the horizon.

2. If sailing vessels, shall carry a white light in a lantern, so constructed as to show a clear, uniform and unbroken light all round the horizon, and shall also, on the approach of or to other vessels, show where it can best be seen a white flare-up light or torch in sufficient time to prevent collision.

All lights mentioned in sub-division (*d*), 1 and 2, shall be visible at a distance of at least 2 miles.

(*e*) Oyster dredgers and other vessels fishing with dredge-nets shall carry and show the same lights as trawlers.

(*f*) Fishing-vessels and fishing-boats may at any time use a flare-up light in addition to the lights which they are by this Article required to carry and show, and they may also use working lights.

(*g*) Every fishing-vessel and every fishing-boat under 150 feet in length, when at anchor, shall exhibit a white light visible all round the horizon at a distance of at least ~~one~~ *2* miles.

Every fishing-vessel of 150 feet in length or upwards, when at anchor, shall exhibit a white light visible all round the horizon at a distance of at least ~~one~~ *2* miles and shall exhibit a second light as provided for vessels of such length by Article 11.

Should any such vessel, whether under 150 feet in length, or of 150 feet in length or upwards, be attached to a net or other fishing gear, she shall, on the approach of other vessels, show an additional white light at least 3 feet below the anchor light, and at a horizontal distance of at least 5 feet away from it in the direction of the net or gear.

(*h*) If a vessel or boat when fishing becomes stationary in consequence of her gear getting fast to a rock or other obstruction, she shall in day-time haul down the day-signal required by sub-division (*k*); at night show the light or lights prescribed for a vessel at anchor; and, during fog, mist, falling snow, or heavy rain-storms, make the signal prescribed for a vessel at anchor. (See sub-division (*d*), and the last paragraph of Article 15.)

(*i*) In fog, mist, falling snow, or heavy rain-storms, drift-net vessels attached to their nets, and vessels when trawling, dredging, or fishing with any kind of drag-net, and vessels line fishing with their lines out, shall, if of 20 tons

gross tonnage or upwards, respectively, at intervals of not more than one minute, make a blast; if steam vessels, with the whistle or siren, and, if sailing vessels, with the fog-horn; each blast to be followed by ringing the bell. Fishing vessels and boats of less than 20 tons gross tonnage shall not be obliged to give the above-mentioned signals; but, if they do not, they shall make some other efficient sound signal at intervals of not more than one minute.

(*k*) All vessels or boats fishing with nets or lines or trawls, when under way, shall in daytime indicate their occupation ~~to an approaching vessel~~ by displaying a basket ~~or other efficient signal~~ where it can best be seen. If vessels or boats at anchor have their gear out, they shall, on the approach of other vessels, show the same signal on the side on which those vessels can pass.

The vessels required by this Article to carry or show the lights hereinbefore specified shall not be obliged to carry the lights prescribed by Article 4 (*a*) and the last paragraph of Article 11.

ARTICLE 10

~~A vessel which is being overtaken by another shall show from her stern to such last-mentioned vessel a white light or a flare-up light.~~

~~The white light required to be shown by this Article may be fixed and carried in a lantern, but in such case the lantern shall be~~ *A vessel when under way shall carry at her stern, a white light* so constructed, fitted, and screened, that it shall throw an unbroken light over an arc of the horizon of 12 points of the compass, viz., for 6 points from right aft on each side of the vessel, *and of such a character* ~~so~~ as to be visible at a distance of at least ~~1 mile~~ *2 miles.* Such light shall be carried as nearly as practicable on the same level as the side lights.

In small vessels, if it is not possible on account of bad weather or other sufficient cause for this light to be fixed, a light shall be kept at hand lighted and ready for use, and shall, on the approach of an overtaking vessel, be shown in sufficient time to prevent collision.

For vessels engaged in towing, see Article 3, last paragraph.

ARTICLE 11

A vessel under 150 feet in length, when at anchor, shall carry forward, where it can best be seen, but at a height not exceeding 20 feet above the hull, a white light in a lantern so constructed as to show a clear, uniform, and unbroken light visible all round the horizon at a distance of at least ~~1~~ *2* miles.

A vessel of 150 feet or upwards in length, when at anchor, shall carry in the forward part of the vessel, at a height of not less than 20, and not exceeding 40, feet above the hull, one such light, and at or near the stern of the vessel, and at such a height that it shall be not less than 15 feet lower than the forward light, another such light.

Between sunrise and sunset all vessels when at anchor in or near a fairway shall carry, forward, where it can best be seen, one black ball, 2 feet in diameter. ~~The length of a vessel shall be deemed to be the length appearing in her certificate of registry.~~

A vessel aground in or near a fairway shall carry *by night* the above light or lights and the two red lights prescribed by Article 4 (*a*), *and by day, where they can best be seen, 3 black balls, each 2 feet in diameter, placed in a vertical line one over the other.*

ARTICLE 12

Every vessel may, if necessary, in order to attract attention, in addition to the lights which she is by these Rules required to carry, show a flare-up light or use any detonating *or other efficient sound* signal that cannot be mistaken for *a prescribed* distress *or fog* signal.

ARTICLE 13

Nothing in these Rules shall interfere with the operation of any special rules made by the Government of any nation with respect to additional station and signal lights for two or more ships of war or for vessels sailing under convoy, or with the exhibition of recognition signals adopted by shipowners, which have been authorized by their respective Governments and duly registered and published.

ARTICLE 14

A ~~steam~~ vessel proceeding under sail ~~only, but having her funnel up,~~ *when also under steam or other mechanical power* shall carry in *the* daytime, forward, where it can best be seen, one ~~black ball~~ *black cone, point upwards,* 2 feet in diameter *at its base.*

SOUND SIGNALS FOR FOG, ETC.

ARTICLE 15

All signals prescribed by this Article for vessels under way shall be given—

1. By "steam vessels" on the whistle or siren.
2. By "sailing vessels and vessels towed" on the fog horn.

The words "prolonged blast" used in this Article, shall mean a blast of from 4 to 6 seconds' duration.

A steam vessel shall be provided with an efficient whistle or siren, sounded by steam or some substitute for steam, so placed that the sound may not be intercepted by any obstruction, and with an efficient fog-horn, to be sounded by mechanical means, and also with an efficient bell.* A sailing vessel of 20 tons gross tonnage or upwards shall be provided with a similar fog-horn and bell.

In fog, mist, falling snow or heavy rain-storms, whether by day or night, the signals described in this Article shall be used as follows, viz.:—

(*a*) A steam vessel having way upon her, shall sound, at intervals of not more than 2 minutes, a prolonged blast.

(*b*) A steam vessel under way, but stopped and having no way upon her, shall sound, at intervals of not more than 2 minutes, 2 prolonged blasts, with an interval of about 1 second between them.

(*c*) A sailing vessel under way shall sound, at intervals of not more than 1 minute, when on the starboard tack, 1 blast, when on the port tack, 2 blasts in succession, and when with the wind abaft the beam, 3 blasts in succession.

(*d*) A vessel, when at anchor, shall, at intervals of not more than 1 minute, ring the bell rapidly for about 5 seconds.

In vessels of more than 350 feet in length the bell shall be sounded in the forepart of the vessel, and, in addition, there shall be sounded in the after-part of the vessel, at intervals of not more than 1 minute, a gong or other instrument, the tone of which cannot be confused with the ringing of the bell.

(*e*) A vessel, when towing, a vessel employed in laying or in picking up a ~~telegraph~~ *submarine* cable, and a vessel under way, which is unable to get out of the way of an approaching vessel through being not under command, or unable to manœuvre as required by these Rules shall, instead of the signals prescribed in subdivisions (*a*), (*b*) and (*c*) of this Article, at intervals of not more than 2 minutes, sound 3 blasts in succession, viz., 1 prolonged blast followed by 2 short blasts. ~~A vessel towed may give this signal and she shall not give any other.~~

A vessel towed, or if more than one vessel is towed, the last vessel of the tow, shall, at intervals of not more than 2 minutes, sound 4 blasts in succession, viz., 1 prolonged blast followed by 3 short blasts, provided that this signal is not required when it is impossible to keep the vessel manned.

When practicable, the vessel towed shall make this signal immediately after the signal made by the towing vessel.

* In all cases where the rules require a bell to be used a drum may be substituted on board Turkish vessels, or a gong where such articles are used on board small sea-going vessels.

(*f*) *A vessel aground in or near a fairway shall give the signal prescribed in paragraph (d), and shall, in addition, give 3 separate and distinct strokes on the bell immediately preceding and following each such signal.*

Sailing vessels and boats of less than 20 tons gross tonnage shall not be obliged to give the above-mentioned signals, but, if they do not, they shall make some other efficient sound-signal at intervals of not more than 1 minute.*

SPEED OF SHIPS TO BE MODERATE IN FOG, ETC.

Article 16

Every vessel shall, in a fog, mist, falling snow, or heavy rain-storms, go at a moderate speed, having careful regard to the existing circumstances and conditions.

A steam vessel hearing, apparently forward of her beam, the fog-signal of a vessel the position of which is not ascertained, shall, so far as the circumstances of the case admit, stop her engines, and then navigate with caution until danger of collision is over.

STEERING AND SAILING RULES

Preliminary—Risk of Collision

Risk of collision can, when circumstances permit, be ascertained by carefully watching the compass bearing of an approaching vessel. If the bearing does not appreciably change, such risk should be deemed to exist.

Article 17

When two sailing vessels are approaching one another, so as to involve risk of collision, one of them shall keep out of the way of the other, as follows, viz.:—

(*a*) A vessel which is running free shall keep out of the way of a vessel which is close-hauled.

(*b*) A vessel which is close-hauled on the port tack shall keep out of the way of a vessel which is close-hauled on the starboard tack.

(*c*) When both are running free, with the wind on different sides, the vessel which has the wind on the port side shall keep out of the way of the other.

(*d*) When both are running free, with the wind on the same side, the vessel which is to windward shall keep out of the way of the vessel which is to leeward.

---

* Dutch steam pilot-vessels, when engaged on their station on pilotage duty in fog, mist, falling snow, or heavy rain-storms are required to make at intervals of 2 minutes at most one long blast with the siren, followed after 1 second by a long blast with the steam whistle and again after 1 second by a long blast on the siren. When not engaged on their station on pilotage duty, they make the same signals as other steamships.

(*e*) A vessel which has the wind aft shall keep out of the way of the other vessel.

ARTICLE 18

When two steam vessels are meeting end on, or nearly end on, so as to involve risk of collision, each shall alter her course to starboard, so that each may pass on the port side of the other.

This Article only applies to cases where vessels are meeting end on, or nearly end on, in such a manner as to involve risk of collision, and does not apply to two vessels which must, if both keep on their respective courses, pass clear of each other.

The only cases to which it does apply are when each of the two vessels is end on, or nearly end on, to the other; in other words, to cases in which, by day, each vessel sees the masts of the other in a line, or nearly in a line, with her own; and, by night, to cases in which each vessel is in such a position as to see both the sidelights of the other.

It does not apply, by day, to cases in which a vessel sees another ahead crossing her own course; or by night, to cases where the red light of one vessel is opposed to the red light of the other, or where the green light of one vessel is opposed to the green light of the other, or where a red light without a green light, or a green light without a red light, is seen ahead or where both green and red lights are seen anywhere but ahead.

ARTICLE 19

When two steam vessels are crossing so as to involve risk of collision, the vessel which has the other on her own starboard side shall keep out of the way of the other.

ARTICLE 20

When a steam vessel and a sailing vessel are proceeding in such directions as to involve risk of collision, the steam vessel shall keep out of the way of the sailing vessel.

ARTICLE 21

Where by any of these Rules one of two vessels is to keep out of the way, the other shall keep her course and speed.

NOTE.—When, in consequence of thick weather or other causes, such vessel finds herself so close that collision cannot be avoided by the action of the giving-way vessel alone, she also shall take such action as will best aid to avert collision. (See Articles 27 and 29.)

ARTICLE 22

Every vessel which is directed by these Rules to keep out of the way of another vessel shall, if the circumstances of the case admit, avoid crossing ahead of the other.

ARTICLE 23

Every steam vessel which is directed by these Rules to keep out of the way of another vessel shall, on approaching her, if necessary, slacken her speed or stop or reverse.

ARTICLE 24

Notwithstanding anything contained in these Rules, every vessel, overtaking any other, shall keep out of the way of the overtaken vessel.

Every vessel coming up with another vessel from any direction more than two points abaft her beam, *i.e.*, in such a position, with reference to the vessel which she is overtaking, that at night she would be unable to see either of that vessel's side-lights, shall be deemed to be an overtaking vessel; and no subsequent alteration of the bearing between the two vessels shall make the overtaking vessel a crossing vessel within the meaning of these Rules, or relieve her of the duty of keeping clear of the overtaken vessel until she is finally past and clear.

As by day the overtaking vessel cannot always know with certainty whether she is forward or abaft this direction from the other vessel, she would, if in doubt, assume that she is an overtaking vessel and keep out of the way.

ARTICLE 25

In narrow channels every steam vessel shall, when it is safe and practicable, keep to that side of the fairway or mid-channel which lies on the starboard side of such vessel.

ARTICLE 26

Sailing vessels under way shall keep out of the way of sailing vessels or boats, fishing with nets, or lines, or trawls. This Rule shall not give to any vessel or boat engaged in fishing the right of obstructing a fair-way used by vessels other than fishing-vessels or boats.

ARTICLE 27

In obeying and construing these Rules, due regard shall be had to all dangers of navigation and collision, and to any special circumstances which may render a departure from the above Rules necessary in order to avoid immediate danger.

SOUND-SIGNALS FOR VESSELS IN SIGHT OF ONE ANOTHER

Article 28

The words "short blast" used in this Article shall mean a blast of about one second's duration.

When vessels are in sight of one another, a steam vessel under way, in taking any course authorized or required by these Rules, shall indicate that course by the following signals on her whistle or siren, viz.:—

One short blast to mean, "I am directing my course to starboard."

Two short blasts to mean, "I am directing my course to port."

Three short blasts to mean, "My engines are going full speed astern."

NO VESSEL UNDER ANY CIRCUMSTANCES TO NEGLECT PROPER PRECAUTIONS

Article 29

Nothing in these Rules shall exonerate any vessel, or the owner, or master, or crew thereof, from the consequences of any neglect to carry lights or signals, or of any neglect to keep a proper look-out, or of the neglect of any precaution which may be required by the ordinary practice of seamen, or by the special circumstances of the case.

RESERVATION OF RULES FOR HARBOURS AND INLAND NAVIGATION

Article 30

Nothing in these Rules shall interfere with the operation of a special rule, duly made by local authority, relative to the navigation of any harbour, river, or inland waters.

DISTRESS SIGNALS

Article 31

When a vessel is in distress and requires assistance from other vessels or from the shore, the following shall be the signals to be used or displayed by her, either together or separately, viz.:—

In the daytime—

1. A gun or other explosive signal fired at intervals of about a minute;
2. The International Code signal of distress; ~~indicated by N.C.~~

3. The ~~distant~~ *distance* signal, consisting of a square flag, having either above or below it a ball or anything resembling a ball;
4. A continuous sounding with any fog-signal apparatus;
5. *The international distress signal made by radiotelegraphy, or radiotelephony, or by any other distance signalling method.*

At night—

1. A gun or other explosive signal fired at intervals of about a minute;
2. Flames on the vessel (as from a burning tar-barrel, oil-barrel, etc.);
3. Rockets or shells, throwing stars of any colour or description, fired one at a time, at short intervals;
4. A continuous sounding with any fog-signal apparatus;
5. *The international distress signal made by radiotelegraphy or radiotelephony, or by any other distance signalling method.*

The use of any of the above signals, except for the purpose of indicating that a vessel is in distress, and the use of any signals which may be confused with any of the above signals, is prohibited.

FINAL ACT OF THE INTERNATIONAL CONFERENCE ON SAFETY OF LIFE AT SEA, 1929

The Governments of Germany, the Commonwealth of Australia, Belgium, Canada, Denmark, Spain, the Irish Free State, the United States of America, Finland, France, the United Kingdom of Great Britain and Northern Ireland, India, Italy, Japan, Norway, the Netherlands, Sweden, the Union of Socialist Soviet Republics;

Desirous of promoting safety of life at sea by establishing in common agreement uniform principles and rules directed thereto:

Having decided to participate in an international conference which, upon the invitation of the Government of the United Kingdom of Great Britain and Northern Ireland, was held in London;

Appointed the following delegations:

GERMANY

Delegates

Dr. Friedrich STHAMER	Ambassador Extraordinary and Plenipotentiary of the German Reich in London.
Mr. KOENIGS	Ministerialdirigent in the Reichsverkehrsministerium, Geheimer Regierungsrat, Berlin.
Mr. WERNER	Oberregierungsrat in the Reichsverkehrsministerium, Geheimer Justizrat, Berlin.
Mr. LAAS	Professor, Director of the "Germanischer Lloyd" Classification Society, Berlin.
Dr. RIESS	Director ret. of the Reichsschiffsvermessungsamt, Geheimer Regierungsrat, Neubrandenburg.
Mr. GIESS	Ministerialrat in the Reichspostministerium, Berlin.
Vice-Admiral DOMINIK	President of the "Deutsche Seewarte," Hamburg.

Experts

Mr. BEHNER	Director of the "Deutsche Betriebsgesellschaft fuer drahtlose Telegraphie," Berlin.

Mr. ELINGIUS	Captain, Hamburg-Suedamerika Linie, Hamburg.
Mr. BIEDERMANN	Director, Norddeutscher Lloyd, Bremen.
Mr. FREYER	Captain, Hamburg.
Mr. HEBERLING	Diplom-Ingenieur "Germanischer Lloyd" Classification Society, Berlin.
Dr. JÄGER	Oberpostrat in the Reichspostministerium.
Mr. KÖHLER	Hamburg.
Mr. KUNSTMANN	Shipowner, Japanese and Spanish Consul, Stettin.
Mr. LUENSEE	Captain, Regierungsrat in the "Deutsche Seewarte," Hamburg.
Mr. REICHENBACHER	Director, Hamburg-Amerika Linie, Hamburg.
Mr. SÜCHTING	Director, Blohm & Voss, Hamburg.

Secretary

Mr. KANBERG	Postinspektor in the Reichspostministerium.

THE COMMONWEALTH OF AUSTRALIA

Delegates

Captain Henry James FEAKES	Royal Australian Navy, Commonwealth Naval Representative in London.
Lieut-Commander Thomas FREE	Royal Naval Reserve (Retired).
Captain J. K. DAVIS	Commonwealth Director of Navigation.

BELGIUM

Delegates

Baron DE GERLACHE DE GOMERY	Director-General of the Marine Department.
Mr. Gustave DE WINNE	Ingénieur en Chef, Director of the Marine Department.
Mr. Georges GOOR	Adviser to the Marine Department.
Mr. Gerard VINCENT	Ingénieur.

Canada

Delegates

Mr. Alexander Johnston	Deputy Minister of Marine.
Mr. Lucien Pacaud	Secretary in the Office of the Canadian High Commissioner in London.

Experts

Lieut.-Commander C. P. Edwards	Director of Radio, Department of Marine.
Mr. Frank McDonnell	Chairman of the Board of Steamship Inspection, Department of Marine.
Captain L. G. Dixon	Marine Superintendent.
Mr. J. W. Bain	Engineer in the Radio Branch, Department of Marine.

Experts

Captain J. Gillies	Representative in London of the Canadian Pacific Steamships, Ltd.
Captain A. S. M. Nicholls.	Representative in London of the Canadian National Steamship Company.

Secretary

Miss N. Frericks	Secretary to the Deputy Minister of Marine.

Denmark

Delegates

Mr. Emil Krogh	Assistant Secretary in the Marine Department, Ministry of Industry, Commerce and Shipping.
Mr. V Topsöe-Jensen	Judge of the Supreme Court of Appeal.
Captain V. Lorck	Chief Examiner of Masters and Mates.
Mr. J. A. Körbing	Technical Managing Director of the United Steamship Company, Copenhagen.
Mr. Aage H. Larsen	Engineer in Chief of the Ministry of Industry, Commerce and Shipping.
Mr. Arnold Poulsen	Engineer Commissioner to the Ministry of Industry, Commerce and Shipping.

Expert

Mr. HAGELBERG.	Chairman of the Association of Danish Shipmasters.

Secretary

Mr. P. VILLADSEN.	Ministry of Industry, Commerce and Shipping.

SPAIN

Delegates

Rear-Admiral Don Francisco Javier de SALAS y Gonzalez	Head of the Naval Commission in Europe.
Engineer-Commander Don Jose RUBI y Rubi.	Naval Commission in Europe.
Lieut.-Commander EDOUARDO GARCIA RAMIREZ.	

IRISH FREE STATE

Delegates

Mr. J. W. DULANTY.	Commissioner for Trade for the Irish Free State in Great Britain.
Mr. E. C. FOSTER.	Chief Surveyor in the Marine Branch, Department of Industry and Commerce.

UNITED STATES OF AMERICA

Delegates

The Honourable Wallace H. WHITE, Junior.	Member of Congress, Chairman of the Committee on Merchant Marine and Fisheries.
Mr. Arthur J. TYRER.	Commissioner of Navigation, Department of Commerce.
Mr. Charles M. BARNES .	Chief of the Treaty Division, Department of State.
Rear-Admiral George H. ROCK.	Construction Corps, United States Navy, Assistant Chief of the Bureau of Construction and Repair, Navy Department.
Captain Clarence S. KEMPFF.	United States Navy, Hydrographer, Navy Department.

Mr. Dickerson N. Hoover	Supervising Inspector-General of the Steamboat Inspection Service, Department of Commerce.
Mr. William D. Terrell	Chief of the Radio Division, Department of Commerce.
Rear-Admiral John G. Tawresey	Construction Corps, United States Navy (Retired), United States Shipping Board.
Mr. Herbert B. Walker	President of the American Steamship Owners' Association.
Mr. Henry G. Smith	President of the National Council of American Shipbuilders.
Captain Charles A. McAllister	President of the American Bureau of Shipping.

Experts

Lieut.-Commander E. L. Cochrane	Construction Corps, United States Navy, Bureau of Construction and Repair, Navy Department.
Mr. J. C. Niedermair	Navy Department.
Mr. J. F. Macmillan	Theodore E. Ferris, Naval Architect, American Steamship Owners' Association.
Mr. David Arnott	American Bureau of Shipping.
Captain William E. Griffith	United States Shipping Board.
Mr. A. J. Smith	Marine Office of America.
Captain N. B. Nelson	Steamboat Inspection Service.
Lieut. E. M. Webster	United States Coast Guard (Retired).
Commander C. M. Austin	United States Navy, Bureau of Navigation, Navy Department.
Mr. E. B. Calvert	United States Weather Bureau.

Secretary

Mr. Vinton Chapin	Foreign Service Officer.

Finland

Delegates

Baron Gustaf Wrede	President of the Shipping Board.
Captain Väinö Bergman	Inspector of Shipping.
Consul Karl Kurten	Manager of the Finnish Shipowners' Association.

Expert

Captain Birger Brandt	Finnish Shipmasters' Association.

France

Delegates

Mr. Rio	Senator and former Minister.
Captain Haarbleicher	Naval Construction Corps, Director of Mercantile Shipping Service, Department of Public Works.
Commander Marie	Naval Construction Corps, Direction of Mercantile Shipping.
Captain Thouroude	Naval Attaché to the French Embassy in London.

Experts

Mr. de Berlhe	Deputy Manager of the Bureau Véritas.
Mr. Brillie	Chief Consulting Engineer of the Compagnie Générale Transatlantique.
Captain Bureau	National Meteorological Office.
Mr. de Catalano	General Marine Superintendent of the Compagnie Générale Transatlantique.
Mr. Dalix	Manager of the Compagnie Radio-Maritime.
Mr. Dubois	Marine Superintendent of the Compagnie des Messageries Maritimes.
Mr. Falcoz	Engineer Superintendent of the Compagnie des Messageries Maritimes.
Mr. Fricker	Chief Surveyor of the Bureau Véritas.
Mr. Nizery	Manager of the Compagnie des Chargeurs Réunis.

Mr. PINCZON	Consulting Naval Architect of the Chantiers de St-Nazaire.
Mr. ROSSIGNEUX	Chief of the Technical Service of the Comité Central des Armateurs de France.

Secretary

Captain DILLY	Inspector of Navigation, Department of Public Works.

UNITED KINGDOM OF GREAT BRITAIN AND NORTHERN IRELAND

Delegates

Sir Herbert W. RICHMOND.	Vice-Admiral, Royal Navy.
Sir Westcott ABELL	Professor of Naval Architecture, Armstrong College, Newcastle-on-Tyne.
Mr. A. L. AYRE	Vice-President of the Shipbuilding Employers' Federation.
Captain F. W. BATE	Professional Officer, Mercantile Marine Department, Board of Trade.
Mr. C. H. BOYD	Mercantile Marine Department, Board of Trade.
Sir William C. CURRIE	President of the Chamber of Shipping of the United Kingdom.
Mr. A. J. DANIEL	Principal Ship Surveyor, Board of Trade.
Sir Norman HILL	Chairman of the Merchant Shipping Advisory Committee.
Sir Charles HIPWOOD	Principal Assistant Secretary, Mercantile Marine Department, Board of Trade.
Captain A. R. H. MORRELL.	Trinity House.

Experts

Mr. G. GUNNING	Assistant General Secretary, National Union of Seamen.
Commander G. S. HORSBURGH	Cunard Steamship Company.
Commander F. G. LORING.	Inspector of Wireless Telegraphy, General Post Office.
Dr. G. C. SIMPSON	Director of the Meteorological Office.

Secretary

Mr. Walter CARTER	Board of Trade.

Assistant Secretaries

Mr. W. G. FERGUSSON	Board of Trade.
Mr. W. GRAHAM	Board of Trade.
Mr. A. E. LEE	Board of Trade.
Mr. W. E. STIMPSON	Board of Trade.
Mr. F. J. WALLER	Board of Trade.
Mr. W. J. WILTON	Board of Trade.

INDIA

Delegates

Sir Geoffrey L. CORBETT	Commerce Department, Government of India.
Captain E. V. WHISH	Port Officer, Bombay.
Mr. M. A. MASTER	General Manager of the Scindia Steam Navigation Company.

ITALY

Delegates

Lieut.-General of Port G. INGIANNI	General Director of the Mercantile Marine.
Vice-Admiral A. ALESSIO	Chief of the Technical Inspectorate of the Mercantile Marine.
Count D. ROGERI di VILLANOVA	Counsellor to the Italian Embassy in London.
Mr. T. C. GIANNINI	Counsellor of Emigration.
Major-General of Port F. MARENA	Vice-Inspector of Harbour Master Offices.
Engineer-General E. FERRETTI	Chief of the Technical Office of the Italian Naval and Aeronautical Register.
Mr. G. GNEME	Chief of the Telegraph Service of the General Direction of Postal and Telegraphic Services.
Commander L. BIANCHERI	Royal Italian Navy.

Experts

The Honourable I. M. Magrini	Member of Parliament, President of the National Fascist Confederation of Seamen and Airmen.
Mr. M. Cosulich	National Fascist Confederation of Maritime and Aerial Transport Enterprises.
Marquis L. Solari	Counsellor Delegate of Radio Marittima Italiana.
Mr. G. Solda	Inspector of the Naval and Aeronautical Register.
Captain L. Zino	National Fascist Confederation of Maritime and Aerial Transport Enterprises.

Secretaries

Lieut.-Colonel of Port S. Giacchetti	Chief of the Secretariat of the General Direction of the Mercantile Marine.
Captain of Port F. Falcolini	Attaché to the Secretariat of the General Direction of the Mercantile Marine.

JAPAN

Delegates

Mr. Yukio Yamamoto	Inspector-General of the Mercantile Marine Bureau, Expert in the Department of Comunications.
Captain Shichihei Ota	Imperial Japanese Navy.
Mr. Itaro Ishii	First-Class Secretary of Embassy.

Experts

Mr. Sonoji Tsuchiya	Secretary of the Local Administration Office of Communications.
Mr. Kazuma Minato	Expert in the Department of Communications.
Mr. Sozo Ikushima	Expert in the Department of Communications.
Mr. Kiyoji Seno	Expert in the Department of Communications.

Commander Prince Tadashige SHIMADZU	Naval Attaché to the Japanese Embassy in London.
Mr. Toshio TAKIYAMA	Expert in the Local Administration Office of Communications.
Constructor - Lieut. - Commander Narasaburo MASUKATA	Imperial Japanese Navy.
Mr. Toshinaga SAITO	Manager, Ship Drawing Office, Kobe Works of Mitsubishi Shipbuilding Company, Limited.
Mr. Yoshio SAITO	Assistant Superintendent Engineer of Nippon Yusen Kabushiki Kaisha.
Mr. Motoki MATSUMURA	Attaché.
Mr. Chuchei ANAZAWA	Expert in the Department of Communications.

NORWAY

Delegates

Mr. B. VOGT	Norwegian Minister in London.
Mr. L. T. HANSEN	Director of the Department of Shipping, Ministry of Commerce and Navigation.
Mr. J. SCHÖNHEYDER	Surveyor-in-Chief of the Ship and Engineer Division, Ministry of Commerce and Navigation.
Mr. Arth H. MATHIESEN	Vice-President of the Norwegian Shipowners' Association.
Captain N. MARSTRANDER	Chairman of the Board of the Norwegian Masters' Association.
Mr. A. BIRKELAND	Manager of the Norwegian Seamen's and Firemen's Union.

Experts

Mr. E. WETTERGREEN	Chief of Division, Ministry of Commerce and Navigation.
Mr. K. S. IRGENS	Senior Captain, Norwegian America Line
Commander Chr. MEYER	Assistant Secretary of the Norwegian Shipowners' Association.

NETHERLANDS

Delegates

Vice-Admiral C. FOCK	Inspector-General of Navigation.
Mr. C. H. de GOEJE	Ex-Inspector-General of Navigation, Netherland East Indies.
Mr. A. van DRIEL	Adviser on Naval Architecture, Shipping Inspection Service.
Mr. J. A. BLAND van den BERG	Inspector of Coastal and Ships' Radiotelegraphy.
Mr. Phs. van OMMEREN, Junior	Chairman of Phs. van Ommeren, Ltd.
Mr. H. G. J. UILKENS	Ex-Commodore of Netherland Steamship Company.

Secretary

Johnkheer H. P. J. BOSCH van DRAKESTEIN	Attaché at the Netherland Legation in London.

SWEDEN

Delegates

Baron PALMSTIERNA	Swedish Minister in London.
Mr. Nils Gustaf NILSSON	Assistant Under-Secretary in the Board of Trade.
Captain Erik Axel Fredrik EGGERT	Maritime Expert to the Social Board.

Experts and Assistant Delegates

Mr. Axel Sigurd LITSTRÖM	Chief Bureau Engineer in the Royal Telegraph Office.
Mr. Gunnar MacErik BÖÖS	First Amanuensis in the Board of Trade.
Captain John Nils Gunnar ANDERBERG	The Swedish Shipowners' Association.
Captain Nils Petter LARSSON	President of the Swedish Society of Masters and Officers of the Mercantile Marine.
Mr. Nicklas OLSSON	President of the Swedish Seamen's Union.

UNION OF SOCIALIST SOVIET REPUBLICS

Delegates

Mr. Jan Lvovitch ARENS .. Counsellor to the U.S.S.R. Embassy in Paris.

Captain Karl Pavlovitch EGGI .. Commander of the Icebreaker *Lenin*, Soviet Merchant Fleet (Sovtorgflot).

Expert and Secretary ..

Mr. Peter Nikolaevitch MATVEEFF .. Chief Inspector of the Register of the U.S.S.R.

The League of Nations, having been invited to send representatives to the Conference to act as observers, appointed the following delegation for this purpose:—

Mr. Robert HAAS .. Secretary-General of the Advisory and Technical Committee for Communications and Transit.

Mr. J. M. F. ROMEIN .. Secretary of the Permanent Committee for Ports and Maritime Navigation,

Who accordingly assembled in London.

Vice-Admiral Sir Herbert Richmond was appointed President of the Conference, and Mr. W. Carter, Secretary-General.

For the purposes of its work the Conference set up the following Committees, of which the under-mentioned were Presidents:—

Committee on Construction: Rear-Admiral Rock.

Committee on Life-Saving Appliances, etc.: Sir Norman Hill.

Committee on Radiotelegraphy: Mr. Giess.

Committee on Safety of Navigation: Sir Charles Hipwood.

Committee on Certificates: Major-General Marena.

Committee on General Provisions: Sir Charles Hipwood.

Committee on Drafting: Senator Rio.

In the course of a series of meetings between the 16th April, 1929, and the 31st May, 1929, a Convention, dated the 31st May, 1929, for the safety of life at sea was drawn up.

I

At the moment of signing the Convention for the Safety of Life at Sea concluded this day, the undersigned plenipotentiaries have agreed on the following—

SAFETY OPERATORS

In order to ensure the coming into force at an early date of the international agreement to make the installation of radiotelegraphy obligatory on all cargo ships of 1,600 tons gross tonnage and upwards, and thereby to promote the general safety of life at sea, the Contracting Governments undertake to use their efforts to promote an amendment to the Radiotelegraph Convention to the effect that the requirements as to the minimum speed of operation to be attained by an operator on board a compulsorily fitted ship should be laid down as follows:—

> "Correct transmission and correct reception by ear of code groups (mixed letters, figures and punctuation marks) at a speed of 16 (sixteen) groups per minute. Each code group must comprise 5 (five) characters, each figure or punctuation mark counting as 2 (two) characters."

Should the International Radiotelegraph Conference find itself unable to approve of the above proposal, the present Conference is of opinion that a new Certificate with operating qualifications as set out above should be established, and that the holders of such Certificates should be authorized to deal with public correspondence in ship stations of the Third Class as defined by the Washington Radiotelegraph Convention.

II

The conference takes note of the following declarations, made by the under-mentioned delegations:—

(A)

The Plenipotentiaries of the United States of America formally declare that the signing of the International Convention for the Safety of Life at Sea by them, on the part of the United States of America, on this date, is not to be construed to mean that the Government of the United States of America recognizes a régime or entity which signs or accedes to the Convention as the Government of a country when that régime or entity is not recognized by the Government of the United States of America as the Government of that country.

The Plenipotentiaries of the United States of America further declare that the participation of the United States of America in the International Convention for the Safety of Life at Sea signed on this date does not involve any contractual obligation on the part of the United States of America to a country, represented by a régime or entity which the Government of the United States of America does not recognize as the Government of that country, until such country has a Government recognized by the Government of the United States of America.

(B)

The Delegation of the Union of Socialist Soviet Republics declares that the Government of the Union of Socialist Soviet Republics, not being a party to the International Radiotelegraph Convention of 1927, does not consider itself bound by the undertaking embodied in Part I of this Final Act, but will, upon ratification of the International Convention for the Safety of Life at Sea, apply and give full effect to those articles of the last-named Convention and its annexes, where reference is made to provisions of the said Radiotelegraph Convention, as parties to the International Convention for the Safety of Life at Sea only.

III

The Conference also adopts the following recommendations:—

AS REGARDS CONSTRUCTION

1. Stability

The necessity for and practicability of adopting stability regulations have been considered by this Conference, and the opinion has been reached that at this time it is practicable to adopt only the general requirement for stability tests on new passenger ships contained in Article 8. The Conference desires, however, to draw the attention of the Contracting Governments to the desirability of a study by each Administration of the subject of stability for the different national types of ships and trades, and of the exchange of information on this subject between these Contracting Governments.

2. Openings in Bulkheads and Ship's Sides

The objection which attaches to openings, which may sometimes be open at sea, in the sides of ships and in the main transverse watertight bulkheads is recognized by this Conference, but it is the sense of the Conference that it is

not at this time practicable to adopt international regulations concerning such openings which are more exacting than those incorporated in the Regulations. The Conference recommends, however, that the various Governments make special effort to assure that the number of such openings, particularly hinged sidescuttles below the margin line and doors low down in the machinery space bulkheads, be kept at the minimum required in each case.

3. Services of Special Risk

The International Conference on Safety of Life at Sea realizes that there are trades, such as the passenger services between England and the nearby Continental ports, in which the sea risks are, owing to weather and traffic conditions, exceptional, and where it is practicable, owing to the absence of general cargo, to adopt a higher standard of subdivision than that prescribed by the Convention. The Conference, therefore, recommends that the Contracting Governments concerned consider the adoption, in the case of ships primarily engaged in the carriage of passengers in such trades, of such improved standards of subdivisions as may be found reasonable and practicable.

AS REGARDS LIFE SAVING APPLIANCES, ETC.

4. Means of Clinging to Boats

The International Conference on Safety of Life at Sea recommends that the Contracting Governments should consider the practicability of requiring life-boats carried on ships registered in their ports to be fitted with means to enable persons to cling to the boats if upturned in the water, without increasing the risks incident to the lowering of the boat.

5. Dangerous Goods

The International Conference on Safety of Life at Sea recommends that every possible effort should be made with a view to attaining an international agreement as to what goods should be considered as "dangerous goods" as mentioned in Article 24 of the present Convention and of fixing uniform rules for the packing and stowage of such goods.

AS REGARDS RADIO-TELEGRAPHY

6. Alarm Signal

The International Conference on Safety of Life at Sea, having approved of the use of the automatic alarm receiver for watchkeeping purposes, and anticipating that a large number of these receivers will be installed in passenger

and cargo ships in the near future, recommends that the next International Radiotelegraph Conference prescribe that "the alarm signal shall, as a general rule, precede the distress signal."

7. Cyclone Warnings

The International Conference on Safety of Life at Sea, considering that it is of more importance to prevent disaster than to render assistance after a disaster has occurred, and being of the opinion that in certain cases use may be made of the auto-alarm to this end, strongly recommends that the next International Radiotelegraph Conference authorize Governments to permit coast stations under their jurisdiction to precede the broadcasting of emergency cyclone warnings by the alarm signal.

8. Wave Lengths

The International Conference on Safety of Life at Sea draws the attention of the Governments concerned to the advisability of ensuring that signals of distress utilizing waves of Type A2 shall be effective over a sufficiently wide band of frequencies.

The Conference also desires to draw attention to the provisions of Article 5, § 11, of the Regulations annexed to the International Radiotelegraph Convention, Washington, 1927, and to point out that radiotelephonic transmissions on frequencies in the neighbourhood of the distress wave will render inoperative automatic alarm receivers working on the alarm signal defined in Article 19, § 21, (*e*), of the above-mentioned Regulations. The Conference desires, therefore, to emphasize the importance, in the interests of safety of life at sea, of avoiding the use of radiotelephonic emissions in the neighbourhood of the distress wave, except in case of emergency.

AS REGARDS SAFETY OF NAVIGATION

9. Radio Aids to Navigation

The International Conference on Safety of Life at Sea recommends that the Contracting Governments should establish and maintain an adequate system of radio aids to navigation, and should take all necessary measures to ensure the efficiency and reliability of such services.

10. Synchronized Radio and Under-Water Signals

The International Conference on Safety of Life at Sea favours the extension of the installation of distance-finding apparatus capable of emitting synchronized radio and under-water signals, as necessary to meet navigational needs in distance finding and position finding by vessels.

11. Depth-Sounding Apparatus

The International Conference on Safety of Life at Sea recommends that the Contracting Governments should encourage the development and use of echo depth-sounding apparatus.

12. Life-Saving Signals

The International Conference on Safety of Life at Sea considers that the signals for life-saving stations communicating with vessels in distress and signals for vessels in distress communicating with life-saving stations should be international.

13. Shore Lights

The International Conference on Safety of Life at Sea considers that, so far as practicable, steps should be taken by the Administrations concerned to regulate the position and the intensity of lights on land in the vicinity of the entrances to ports so as to ensure that such lights cannot be mistaken for, or do not impair the visibility of, the navigation lights of the port.

14. Collision Regulations—Aircraft

Under the International Collision Regulations, aircraft on the surface of the water are within the definition of "steam vessels." As such, they are required to carry lights, make sound signals and manoeuvre, both in respect of surface vessels and of each other, in a manner that is not, in some instances, possible for them, due to the physical limitations of aircraft. At the same time, they can and should take upon themselves some definite measure of responsibility for the avoidance of collisions between surface vessels and aircraft on the surface of the water, and it is necessary that their rights and duties, when on the surface of the water, should be defined.

In order that an international agreement may be reached covering those provisions of the International Collision Regulations which apply to surface vessels and to aircraft on the surface of the high seas and on the waters connected therewith, navigable by sea-going vessels, the Conference recommends, in the interests of safety of life at sea, that this question should be studied by the competent authorities in the countries concerned, so that there may be an exchange of views, and an endeavour made to arrive at an international agreement. The Conference requests the Government of the United Kingdom of Great Britain and Northern Ireland to take the necessary action in the matter.

AS REGARDS CERTIFICATES

15. Recognition of Convention Standards

Recognizing the importance of bringing the Convention standards into operation at the earliest possible date, it is recommended that all such steps as may be practicable should be taken by the Contracting Governments to secure the recognition in international trade as from the date of the signing of this Convention of such ships as in fact conform to such standards.

In faith whereof the undersigned have affixed their signatures to the present Act.

Done in London this thirty-first day of May, 1929, in a single copy which shall be deposited in the archives of the Government of the United Kingdom of Great Britain and Northern Ireland, which shall transmit certified true copies thereof to all signatory Governments.

STHAMER
GUSTAV KOENIGS
ARTHUR WERNER
WALTER LAAS
OTTO RIESS
HERMANN GIESS
HUGO DOMINIK

HENRY JAMES FEAKES
THOMAS FREE

A. de GERLACHE de GOMERY
G. De WINNE

A. JOHNSTON
LUCIEN PACAUD

EMIL KROGH
V. LORCK
P. VILLADSEN

JAVIER de SALAS

JOHN WHELAN DULANTY
E. C. FOSTER

WALLACE H. WHITE
ARTHUR J. TYRER
CHARLES M. BARNES
GEO. H. ROCK
CLARENCE S. KEMPFF

DICKERSON N. HOOVER
W. D. TERRELL
JOHN G. TAWRESEY
HERBERT B. WALKER
CHARLES A. McALLISTER
EDWARD L. COCHRANE
J. C. NIEDERMAIR
JOHN F. MACMILLAN
DAVID ARNOTT
N. B. NELSON
E. M. WEBSTER
E. B. CALVERT
VINTON CHAPIN
GUSTAV WREDE
V. BERGMAN
KARL KURTEN

RIO
A. HAARBLEICHER
JEAN MARIE
F. THOUROUDE
H. BRILLIE
FRICKER
J. PINCZON
R. ROSSIGNEUX
CH. DILLY

H. W. RICHMOND
WESTCOTT ABELL
A. L. AYRE
F. W. BATE
C. H. BOYD
WILLIAM C. CURRIE
A. J. DANIEL
NORMAN HILL
C. HIPWOOD
A. MORRELL
WALTER CARTER
W. G. FERGUSSON
W. GRAHAM
A. E. LEE
W. E. STIMPSON
F. J. WALLER
W. J. WILTON

G. L. CORBETT
E. V. WHISH
MANSUKHLAL ATMARAM MASTER

GIULIO INGIANNI
ALBERTO ALESSIO
DELFINO ROGERI DI VILLANOVA
TORQUATO C. GIANNINI

FRANCESCO MARENA
ERNESTO FERRETTI
G. GNEME
LUIGI BIANCHERI
M. COSULICH
SALVATORE GIACCHETTI
FEDERICO FALCOLINI

YUKIO YAMAMOTO
SHICHIHEI OTA
ITARO ISHII
SONOJI TSUCHIYA
KAZUMA MINATO
S. IKUSHIMA
K. SENO
SHIMADZU
N. MASUKATA
T. SAITO
Y. SAITO
MOTOKI MATSUMURA
C. ANAZAWA

B. VOGT
L. T. HANSEN
ARTH H. MATHIESEN
E. WETTERGREEN

C. FOCK
C. H. DE GOEJE
A. VAN DRIEL
J. A. BLAND-V-D.-BERG
PHS. VAN OMMEREN
H. G. J. UILKENS
H. BOSCH VAN DRAKESTEIN

ERIK PALMSTIERNA
NILS GUSTAF NILSSON
A. SIGURD LITSTRÖM
G. MACERIK BÖÖS
NICKLAS OLSSON

J. ARENS
K. EGGI
P. MATVEEFF.

SCHEDULE II

INTERNATIONAL LOAD LINE CONVENTION, 1930

PREAMBLE

THE Governments of Germany, the Commonwealth of Australia, Belgium, Canada, Chile, Cuba, Denmark, the Free City of Danzig, Spain, the Irish Free State, the United States of America, Finland, France, the United Kingdom of Great Britain and Northern Ireland, Greece, India, Iceland, Italy, Japan, Latvia, Mexico, Norway, New Zealand, Paraguay, the Netherlands, Peru, Poland, Portugal, Sweden, and the Union of Socialist Soviet Republics; desiring to promote safety of life and property at sea by establishing in common agreement uniform principles and rules with regard to the limits to which ships on international voyages may be loaded, have resolved to conclude a Convention for that purpose and have appointed as their Plenipotentiaries:—

The Government of Germany:

Mr. Gustav KOENIGS, Ministerialdirigent in the Reichsverkehrsministerium, Geheimer Regierungsrat, Berlin.

Mr. Arthur WERNER, Ministerialrat in the Reichsverkehrsministerium, Geheimer Justizrat, Berlin.

Professor Walter LAAS, Director of the "Germanischer Lloyd" Classification Society, Berlin.

Mr. Karl STURM, Verwaltungsdirector of the See-Berufsgenossenschaft, Hamburg.

The Government of the Commonwealth of Australia:

Captain Henry Priaulx CAYLEY, Royal Australian Navy, Commonwealth Naval Representative in London.

Mr. Vincent Cyril DUFFY, Australia House.

The Government of Belgium:

Mr. Raoul F. GRIMARD, Naval Engineer, Technical Adviser to the Central Naval Department.

The Government of Canada:

Mr. Alexander JOHNSTON, Deputy Minister of Marine.

The Government of Chile:

Lieut-Commander Constructor Oscar BUNSTER, Member of the Chilian Naval Commission in London.

The Government of Cuba:

Mr. Guillermo PATTERSON, Cuban Minister in London.

The Government of Denmark:

Mr. Emil KROGH, Assistant Secretary in the Ministry of Shipping and Fisheries.
Mr. Aage H. LARSEN, Naval Architect and Engineer in Chief to the Ministry of Shipping and Fisheries.
Mr. J. A. KÖRBING, Director of the "Forenede Dampskibsselskab," Copenhagen.
Captain H. P. HAGELBERG, Chairman of the Association of Danish Shipmasters.
Mr. Erik JACOBSEN, Trade Union Manager.

The Government of the Free City of Danzig:

Mr. Alphonse POKLEWSKI-KOZIELL, Commercial Counsellor, Polish Legation, London.
Mr. Waldemar SIEG, Commercial Counsellor.

The Government of Spain:

Mr. Octavino MARTINEZ-BARCA, Engineer, Spanish Navy.

The Government of the Irish Free State:

Mr. J. W. DULANTY, Commissioner for Trade for the Irish Free State in Great Britain.
Mr. T. J. HEGARTY, Ship Surveyor, Transport and Marine Branch, Department of Industry and Commerce.

The Government of the United States of America:

Mr. Herbert B. WALKER, President of the American Steamship Owners' Association.
Mr. David ARNOTT, Chief Surveyor, American Bureau of Shipping.
Mr. Laurens PRIOR, Bureau of Navigation, Department of Commerce.
Mr. Howard C. TOWLE, National Council of American Shipbuilders.
Mr. Samuel D. MCCOMB, Marine Office of America.
Captain Albert F. PILLSBURY, Pillsbury and Curtis, San Francisco.
Mr. Robert F. HAND, Vice-President Standard Shipping Company, New York.
Mr. James KENNEDY, General Manager, Marine Department, Gulf Refining Company, New York.
Mr. H. W. WARLEY, Vice-President Ore Steamship Corporation, New York.
Rear-Admiral John G. TAWRESEY, C.C., United States Navy (Retired). United States Shipping Board.

The Government of Finland:

Mr. A. H. SAASTAMOINEN, Finnish Minister in London.
Commander Birger BRANDT, Finnish Shipmasters' Association.

The Government of France:

Mr. André Maurice HAARBLEICHER, Naval Construction Corps, Director of the Departments of the Mercantile Fleet and of Naval Material at the Ministry of the Mercantile Marine.

Mr. René Hippolyte Joseph LINDEMANN, Assistant Director of the Department of Marine Labour and of the Accountants' Department at the Ministry of the Mercantile Marine.

Mr. Jean Henri Théophile MARIE, Naval Construction Corps, Assistant to the Director of the Departments of the Mercantile Fleet and of Naval Material at the Ministry of the Mercantile Marine.

Mr. A. H. A. de BERLHE, Deputy Manager of the Bureau Veritas.

The Government of the United Kingdom of Great Britain and Northern Ireland:

Sir Henry F. OLIVER, Admiral of the Fleet, Royal Navy.

Captain F. W. BATE, Professional Officer, Mercantile Marine Department, Board of Trade.

Mr. A. J. DANIEL, Principal Ship Surveyor, Board of Trade.

Captain J. T. EDWARDS, Master Mariner (Retired).

Sir Ernest W. GLOVER, Chamber of Shipping of the United Kingdom.

Sir Norman HILL, Chairman, Merchant Shipping Advisory Committee, Board of Trade.

Sir Charles HIPWOOD, Board of Trade.

Mr. J. Foster KING, Chief Surveyor to the British Corporation Register of Shipping and Aircraft.

Dr. J. MONTGOMERIE, Chief Ship Surveyor to Lloyd's Register of Shipping.

Sir Charles J. O. SANDERS, Chairman, Load-Line Committee, 1927-1929.

Mr. William Robert SPENCE, General Secretary, National Union of Seamen.

Captain A. SPENCER, Master Mariner (Retired).

The Government of Greece:

Mr. Nicolas G. LELY, Consul-General for Greece in London.

The Government of India:

Sir Geoffrey L. CORBETT, Late Secretary to the Government of India, Commerce Department.

Mr. Nowrojee Dadabhoy ALLBLESS, Chairman of Scindia Steamships (London) Ltd.

Captain Kavas OOKERJEE, Marine Superintendent, Scindia Steam Navigation Company, Ltd., Bombay.

Engineer-Commander John Sutherland PAGE, Royal Indian Marine, late Principal Engineer and Ship Surveyor, Government of Bengal.

The Government of Iceland:

Mr. Emil KROGH, Assistant Secretary to the Danish Ministry of Shipping and Fisheries.
Mr. Aage H. LARSEN, Naval Architect and Engineer in Chief to the Danish Ministry of Shipping and Fisheries.
Mr. J. A. KÖRBING, Director of the "Forenede Dampskibsselskab," Copenhagen.
Captain H. P. HAGELBERG, Chairman of the Association of Danish Shipmasters.
Mr. Erik JACOBSEN, Trade Union Manager, Denmark.

The Government of Italy:

General Giulio INGIANNI, General Director of the Mercantile Marine.
Admiral Giuseppe CANTÜ, Admiral of Division, Technical Inspector of the Mercantile Marine.
Professor Torquato GIANNINI, Counsellor for Emigration in the Italian Foreign Office.

The Government of Japan:

Mr. Shoichi NAKAYAMA, First Class Secretary of Embassy, London.
Mr. Sukefumi IWAI, Expert in the Local Administration Office of Communications.

The Government of Latvia:

Mr. Arturs OZOLS, Director of the Marine Department.
Captain Andrejs LONFELDS, Latvian Shipowners' Society.

The Government of Mexico:

Mr. Gustavo Luders de NEGRI, Consul-General for Mexico in London.

The Government of Norway:

Mr. Erling BRYN, Director of the Department of Shipping, Ministry of Commerce and Navigation.
Mr. Johan SCHÖNHEYDER, Surveyor-in-Chief in the Ministry of Commerce and Navigation.
Dr. J. BRUHN, Director of the Norwegian Veritas.
Mr. J. Hysing OLSEN, Shipowner.
Mr. Eivind TONNESEN, Managing Director of the Norwegian Shipmasters' Association.
Mr. A. BIRKELAND, President of the Norwegian Sailors' and Firemen's Union.

The Government of New Zealand:

Sir Thomas Mason WILFORD, High Commissioner for New Zealand in London.

Sir Charles HOLDSWORTH, Managing Director of the Union Steamship Company of New Zealand, Ltd.

The Government of Paraguay:

Dr. Horacio CARISIMO, Chargé d'Affaires in London.

The Government of the Netherlands:

Vice-Admiral (retired) C. FOCK, Inspector-General of Navigation, Chairman of the Freeboard Assigning Commission.

Mr. A. van DRIEL, Naval Architect, Adviser on Naval Architecture to the Shipping Inspection Service, Member and Secretary of the Freeboard Assigning Commission.

Mr. J. BRAUTIGAM, Chairman of the Netherlands Union of Transport Workers, Member of the Second Chamber of the States-General.

Mr. J. W. LANGELER, Inspector of Shipping, Dutch East Indies.

Mr. J. Rypperda WIERDSMA, Chairman of the Holland-America Line.

Captain G. L. HEERIS, Secretary of the Netherlands Shipowners' Association.

The Government of Peru:

Captain Manuel D. FAURA, Naval Attaché in London.

The Government of Poland:

Mr. Alphonse POKLEWSKI-KOZIELL, Commercial Counsellor, Polish Embassy, London.

Mr. Boguslaw BAGNIEWSKI, Counsellor, Ministry of Industry and Trade, Warsaw.

The Government of Portugal:

Mr. Thomaz Ribeiro de MELLO, Minister Plenipotentiary; Head of the Economic Section of the Portuguese Ministry of Foreign Affairs.

Captain Carlos Theodoro da COSTA, Naval Architect.

The Government of Sweden:

Baron Erik Kule PALMSTIERNA, Swedish Minister in London.

Mr. Per Axel LINDBLAD, Assistant Under-Secretary in the Board of Trade.

Captain Erik Axel Fredrik EGGERT, Maritime Expert to the Social Board.

The Government of the Union of Socialist Soviet Republics:

Mr. Dimitri BOGOMOLOFF, Counsellor of the Soviet Embassy in London.

Who, having communicated their full powers, found in good and due form, have agreed as follows:—

CHAPTER I.—PRELIMINARY

ARTICLE 1

General Obligation of Convention

So that the load lines prescribed by this Convention shall be observed, the Contracting Governments undertake to give effect to the provisions of this Convention, to promulgate all regulations, and to take all other steps which may be necessary to give this Convention full and complete effect.

The provisions of this Convention are completed by Annexes, which have the same force and take effect at the same time as this Convention. Every reference to this Convention implies at the same time a reference to the Rules annexed thereto.

ARTICLE 2

Scope of Convention

1. This Convention applies to all ships engaged on international voyages, which belong to countries the Governments of which are Contracting Governments, or to territories to which this Convention is applied under Article 21, except—

(*a*) ships of war; ships solely engaged in fishing; pleasure yachts and ships not carrying cargo or passengers;

(*b*) ships of less than 150 tons gross.

2. Ships when engaged on international voyages between the near neighbouring ports of two or more countries may be exempted by the Administration to which such ships belong from the provisions of this Convention, so long as they shall remain in such trades, if the Governments of the countries in which such ports are situated shall be satisfied that the sheltered nature and conditions of such voyages between such ports make it unreasonable or impracticable to apply the provisions of this Convention to ships engaged in such trades.

3. All agreements and arrangements relating to load line or matters appertaining thereto at present in force between

Contracting Governments shall continue to have full and complete effect during the terms thereof as regards—

(*a*) ships to which this Convention does not apply;

(*b*) ships to which this Convention applies in respect of matters for which it has not expressly provided.

To the extent, however, that such agreements or arrangements conflict with the provisions of this Convention, the provisions of this Convention shall prevail.

Subject to any such agreement or arrangement—

(*a*) all ships to which this Convention does not apply; and

(*b*) all matters which are not expressly provided for in this Convention;

shall remain subject to the legislation of each Contracting Government to the same extent as if this Convention had not been made.

ARTICLE 3

Definitions

In this Convention, unless expressly provided otherwise—

(*a*) a ship is regarded as belonging to a country if it is registered by the Government of that country;

(*b*) the expression "Administration" means the Government of the country to which the ship belongs;

(*c*) an "international voyage" is a voyage from a country to which this Convention applies to a port outside such country, or conversely, and for this purpose, every colony, overseas territory, protectorate or territory under suzerainty or mandate is regarded as a separate country;

(*d*) the expression "Rules" means the Rules contained in Annexes I, II and III;

(*e*) a "new ship" is a ship, the keel of which is laid on or after the 1st July, 1932, all other ships being regarded as existing ships;

(*f*) the expression "steamer" includes any vessel propelled by machinery.

ARTICLE 4

Cases of "Force Majeure"

No ship, which is not subject to the provisions of this Convention at the time of its departure on any voyage, shall become subject to the provisions of this Convention on account of any deviation from its intended voyage due to stress of weather or any other cause of *force majeure.*

In applying the provisions of this Convention, the Administration shall give due consideration to any deviation or delay caused to any ship owing to stress of weather or to any other cause of *force majeure.*

CHAPTER II.—LOAD LINE: SURVEY AND MARKING

ARTICLE 5

General Provisions

No ship to which this Convention applies shall proceed to sea on an international voyage after the date on which this Convention comes into force, unless the ship, being—

A—a new ship,

(*a*) has been surveyed in accordance with the provisions of Annex I;

(*b*) complies with the provisions of Part II of Annex I; and

(*c*) has been marked in accordance with the provisions of this Convention.

B—an existing ship,

(*a*) has been surveyed and marked (whether before or after this Convention comes into force) in accordance with the conditions prescribed either in paragraph A of this Article or in one of the sets of Rules for the Assignment of Load Line particularized in Annex IV; and

(*b*) complies with the provisions of Part II of Annex I in principle, and also in detail, so far as is reasonable and practicable, having regard to the efficiency of (i) the protection of openings; (ii) guard rails; (iii) freeing ports, and (iv) means of access to crews' quarters provided by the existing arrangements, fittings and appliances on the ship.

ARTICLE 6

Provisions for Steamers carrying Timber Deck Cargoes

1. A steamer which has been surveyed and marked under Article 5 shall be entitled to be surveyed and marked with a timber load line under Part V of Annex I if, being—

A—a new ship, it complies with the conditions and provisions prescribed in Part V of Annex I;

B—an existing ship, it complies with the conditions and provisions of Part V of Annex I other than Rule LXXX, and also in principle, so far as is reasonable and practicable, with the conditions and provisions prescribed by Rule LXXX provided that in assigning a timber load line to an existing ship the Administration shall make such addition to the freeboard as shall be reasonable, having regard to the extent to which such ship falls short of full compliance with the conditions and provisions prescribed in Rule LXXX.

2. A steamer when using the timber load line shall comply with Rules LXXXIV, LXXXV, LXXXVI, LXXXVIII and LXXXIX.

ARTICLE 7

Provisions for Tankers

A steamer which has been surveyed under Article 5 shall be entitled to be surveyed and marked as a tanker under Part VI of Annex I if, being—

A—a new ship, it complies with the conditions and provisions prescribed in Part VI of Annex I;

B—an existing ship, it complies with the conditions and provisions in Rules XCIII, XCVI, XCVII, XCVIII and XCIX, and also in principle so far as is reasonable and practicable with Rules XCIV, XCV and C, provided that in assigning a tanker load line to an existing ship the Administration shall make such addition to the freeboard as shall be reasonable having regard to the extent to which such ship falls short of full compliance with the conditions and provisions prescribed in Rules XCIV, XCV and C.

ARTICLE 8

Provisions for Ships of Special Types

For steamers over 300 feet in length, possessing constructional features similar to those of a tanker which afford extra invulnerability against the sea, a reduction in freeboard may be granted.

The amount of such reduction shall be determined by the Administration in relation to the freeboard assigned to tankers, having regard to the degree of compliance with the conditions of assignment laid down for these ships, and the degree of subdivision provided.

The freeboard assigned to such a ship shall in no case be less than would be assigned to the ship as a tanker.

ARTICLE 9

Survey

The survey and marking of ships for the purpose of this Convention shall be carried out by officers of the country to which the ships belong, provided that the Government of each country may entrust the survey and marking of its ships either to Surveyors nominated for this purpose, or to organizations recognized by it. In every case the Government concerned fully guarantees the completeness and efficiency of the survey and marking.

ARTICLE 10

Zones and Seasonal Areas

A ship to which this Convention applies shall conform to the conditions applicable to the zones and seasonal areas described in Annex II to this Convention.

A port standing on the boundary line between two zones shall be regarded as within the zone from or into which the ship arrives or departs.

CHAPTER III.—CERTIFICATES

ARTICLE 11

Issue of Certificates

A certificate, called "International Load Line Certificate," shall be issued to every ship which has been surveyed and marked in accordance with this Convention, but not otherwise.

An International Load Line Certificate shall be issued either by the Government of the country to which the ship belongs or by any person or organization duly authorized by that Government, and in every case the Government assumes full responsibility for the certificate.

ARTICLE 12

Issue of Certificates by another Government

The Government of a country to which this Convention applies may, at the request of the Government of any other country to which this Convention applies, cause any ship which belongs to the last-mentioned country, or (in the case of an unregistered ship) which is to be registered by the Government of that country, to be surveyed and marked, and, if satisfied that the requirements of this Convention are complied with, issue an International Load Line Certificate to such ship, under its own responsibility. Any certificate so issued must contain a statement to the effect that it has been issued at the request of the Government of the country to which the ship belongs, or of the Government by whom the ship is to be registered, as the case may be, and it shall have the same force and receive the same recognition as a certificate issued under Article 11 of this Convention.

ARTICLE 13

Form of Certificate

The International Load Line Certificates shall be drawn up in the official language or languages of the country by which they are issued.

The form of the certificate shall be that of the model given in Annex III, subject to such modifications as may, in accordance with Rule LXXVIII, be made in the case of ships carrying timber deck cargoes.

ARTICLE 14

Duration of Certificates

1. An International Load Line Certificate shall, unless it is renewed in accordance with the provisions of paragraph 2 of this Article, expire at the end of such period as may be specified therein by the Administration which issues it: but the period so specified shall not exceed five years from the date of issue.

2. An International Load Line Certificate may be renewed from time to time by the Administration which issued it for such period (not exceeding five years on any occasion) as the Administration thinks fit, after a survey not less effective than the survey required by this Convention before the issue of the certificate, and any such renewal shall be endorsed on the certificate.

3. An Administration shall cancel any International Load Line Certificate issued to a ship belonging to its country:

A. If material alterations have taken place in the hull and superstructures of the ship which affect the calculations of freeboard.

B. If the fittings and appliances for the (i) protection of openings, (ii) guard rails, (iii) freeing ports and (iv) means of access to crews' quarters are not maintained in as effective a condition as they were in when the certificate was issued.

C. If the ship is not inspected periodically at such times and under such conditions as the Administration may think necessary for the purpose of securing that the hull and superstructures referred to in Condition A are not altered and that the fittings and appliances referred to in Condition B are maintained as therein provided throughout the duration of the certificate.

ARTICLE 15

Acceptance of Certificates

International Load Line Certificates issued under the authority of a Contracting Government shall be accepted by the other Contracting Governments as having the same force as the certificates issued by them to ships belonging to their respective countries.

ARTICLE 16

Control

1. A ship to which this Convention applies, when in a port of a country to which it does not belong, is in any case subject to control with respect to load line as follows: An officer duly authorized by the Government of that country may take such steps as may be necessary for the purpose of seeing that there is on board a valid International Load Line Certificate. If there is such a certificate on board the ship, such control shall be limited to the purpose of securing—

(*a*) that the ship is not loaded beyond the limits allowed by the certificate;

(*b*) that the position of the load line on the ship corresponds with the certificate; and

(*c*) that the ship has not been so materially altered in respect to the matters dealt with in conditions A and B (set out in paragraph 3 of Article 14) that the ship is manifestly unfit to proceed to sea without danger to human life.

2. Only officers possessing the necessary technical qualifications shall be authorized to exercise control as aforesaid, and if such control is exercised under (*c*) above, it shall only be exercised in so far as may be necessary to secure that the ship shall be made fit to proceed to sea without danger to human life.

3. If control under this Article appears likely to result in legal proceedings being taken against the ship, or in the ship being detained, the Consul of the country to which the ship belongs shall be informed as soon as possible of the circumstances of the case.

ARTICLE 17

Privileges

The privileges of this Convention may not be claimed in favour of any ship unless it holds a valid International Load Line Certificate.

CHAPTER IV.—GENERAL PROVISIONS

ARTICLE 18

Equivalents

Where in this Convention it is provided that a particular fitting, or appliance, or type thereof, shall be fitted or carried in a ship, or that any particular arrangement shall be adopted, any Administration may accept in substitution

therefor any other fitting, or appliance, or type thereof, or any other arrangement, provided that such Administration shall have been satisfied that the fitting, or appliance, or type thereof, or the arrangement substituted is in the circumstances at least as effective as that specified in this Convention.

Any Administration which so accepts a new fitting, or appliance, or type thereof, or new arrangement shall communicate the fact to the other Administrations, and, upon request, the particulars thereof.

ARTICLE 19

Laws, Regulations, Reports

The Contracting Governments undertake to communicate to each other—

(1) the text of laws, decrees, regulations and decisions of general application which shall have been promulgated on the various matters within the scope of this Convention;

(2) all available official reports or official summaries of reports in so far as they show the results of the provisions of this Convention, provided always that such reports or summaries are not of a confidential nature.

The Government of the United Kingdom of Great Britain and Northern Ireland is invited to serve as an intermediary for collecting all this information and for bringing it to the knowledge of the other Contracting Governments.

ARTICLE 20

Modifications, Future Conferences

1. Modifications of this Convention which may be deemed useful or necessary improvements may at any time be proposed by any Contracting Government to the Government of the United Kingdom of Great Britain and Northern Ireland, and such proposals shall be communicated by the latter to all the other Contracting Governments, and if any such modifications are accepted by all the Contracting Governments (including Governments which have deposited ratifications or accessions which have not yet become effective) this Convention shall be modified accordingly.

2. Conferences for the purpose of revising this Convention shall be held at such times and places as may be agreed upon by the Contracting Governments.

A Conference for this purpose shall be convoked by the Government of the United Kingdom of Great Britain and Northern Ireland whenever, after this Convention has been in force for five years, one-third of the Contracting Governments express a desire to that effect.

CHAPTER V.—FINAL PROVISIONS.

ARTICLE 21.

Application to Colonies.

1. A Contracting Government may, at the time of signature, ratification, accession or thereafter, by a notification in writing addressed to the Government of the United Kingdom of Great Britain and Northern Ireland, declare its desire that this Convention shall apply to all or any of its Colonies, overseas territories, protectorates or territories under suzerainty or mandate, and this Convention shall apply to all the territories named in such notification, two months after the date of the receipt thereof, but, failing such notification, this Convention will not apply to any such territories.

2. A Contracting Government may at any time by a notification in writing addressed to the Government of the United Kingdom of Great Britain and Northern Ireland express its desire that this Convention shall cease to apply to all or any of its colonies, overseas territories, protectorates or territories under suzerainty or mandate to which this Convention shall have, under the provisions of the preceding paragraph, been applicable for a period of not less than five years, and in such case the Convention shall cease to apply twelve months after the date of the receipt of such notification by the Government of the United Kingdom of Great Britain and Northern Ireland to all territories mentioned therein.

3. The Government of the United Kingdom of Great Britain and Northern Ireland shall inform all the other Contracting Governments of the application of this Convention to any Colony, overseas territory, protectorate or territory under suzerainty or mandate under the provisions of paragraph 1 of this Article, and of the cessation of any such application under the provisions of paragraph 2, stating in each case the date from which this Convention has become or will cease to be applicable.

ARTICLE 22.

Authentic Texts.—Ratification.

This Convention, of which both the English and French texts shall be authentic, shall be ratified.

The instruments of ratification shall be deposited in the archives of the Government of the United Kingdom of Great Britain and Northern Ireland, which will notify all the other signatory or acceding Governments of all ratifications deposited and the date of their deposit.

ARTICLE 23.

Accession.

A Government (other than the Government of a territory to which Article 21 applies) on behalf of which this Convention has not been signed, shall be allowed to accede thereto at any time after the Convention has come into force. Accessions shall be effected by means of notifications in writing addressed to the Government of the United Kingdom of Great Britain and Northern Ireland, and shall take effect three months after their receipt.

The Government of the United Kingdom of Great Britain and Northern Ireland shall inform all signatory and acceding Governments of all accessions received and of the date of their receipt.

ARTICLE 24.

Date of Coming in Force.

This Convention shall come into force on the 1st July, 1932, as between the Governments which have deposited their ratifications by that date, and provided that at least five ratifications have been deposited with the Government of the United Kingdom of Great Britain and Northern Ireland. Should five ratifications not have been deposited by that date, this Convention shall come into force three months after the date on which the fifth ratification is deposited. Ratifications deposited after the date on which this Convention has come into force shall take effect three months after the date of their deposit.

ARTICLE 25

Denunciation

This Convention may be denounced on behalf of any Contracting Government at any time after the expiration of five years from the date on which the Convention comes into force in so far as that Government is concerned. Denunciation shall be effected by a notification in writing addressed to the Government of the United Kingdom of Great Britain and Northern Ireland, which will notify all the other Contracting Governments of all denunciations received and of the date of their receipt.

A denunciation shall take effect twelve months after the date on which notification thereof is received by the Government of the United Kingdom of Great Britain and Northern Ireland.

In faith whereof, the Plenipotentiaries have signed hereafter.

Done at London this fifth day of July, 1930, in a single copy, which shall remain deposited in the archives of the Government of the United Kingdom of Great Britain and Northern Ireland, which shall transmit certified true copies thereof to all signatory Governments.

(L.S.) GUSTAV KOENIGS.
WALTER LAAS.
KARL STURM.
H. P. CAYLEY.
V. C. DUFFY.
R. GRIMARD.
A. JOHNSTON.
OSCAR BUNSTER.
GUILLERMO PATTERSON.
EMIL KROGH.
AAGE H. LARSEN.
H. P. HAGELBERG.
OCTAVIANO M. BARCA.
SEAN DULCHAONTIGH.
T. J. HEGARTY.
HERBERT B. WALKER.
DAVID ARNOTT.
LAURENS PRIOR.
HOWARD C. TOWLE.
ALBERT F. PILLSBURY.
ROBERT F. HAND.
JAS. KENNEDY.
H. W. WARLEY.
JOHN G. TAWRESEY.
E. PALMSTIERNA.
E. EGGERT.
A. H. SAASTAMOINEN.
B. BRANDT.
JEAN MARIE.
A. DE BERLHE.
H. F. OLIVER.
F. W. BATE.
ALFRED J. DANIEL.
JOHN T. EDWARDS.
ERNEST W. GLOVER.
NORMAN HILL.
C. HIPWOOD.
J. FOSTER KING.
J. MONTGOMERIE.
CHARLES J. O. SANDERS.
W. R. SPENCE.
A. SPENCER.
N. G. LELY.
G. L. CORBETT.
NOWROJEE DADABHOY ALLBLESS

KAVAS OOKERJEE.
J. S. PAGE.
EMIL KROGH.
AAGE H. LARSEN.
H. P. HAGELBERG.
GIULIO INGIANNI.
GIUSEPPE CANTU.
S. NAKAYAMA.
S. IWAI.
A. OZOLS.
G. LUDERS DE NEGRI.
E. BRYN.
J. SCHONHEYDER.
THOMAS M. WILFORD.
C. HOLDSWORTH.
C. FOCK.
A. VAN DRIEL.
JOH. BRAUTIGAM.
LANGELER.
J. R. WIERDSMA.
M. D. FAURA.
A. POKLEWSKI-KOZIELL.
B. BAGNIEWSKI.
THOMAZ RIBEIRO DE MELLO.
CARLOS THEODORO DA COSTA.
D. BOGOMOLOFF.
S. HORACIO CARISIMO.
T. C. GIANNINI.

FINAL PROTOCOL

At the moment of signing the International Load Line Convention concluded this day, the under-mentioned Plenipotentiaries have agreed on the following:—

I.

Ships engaged solely on voyages on the Great Lakes of North America and ships engaged in other inland waters are to be regarded as outside the scope of the Convention.

II.

This Convention is not applied to the existing ships of the United States of America and of France of the lumber schooner type propelled by power, with or without sails, or by sails alone.

III.

The Government of the United Kingdom of Great Britain and Northern Ireland shall convoke a Conference of the Contracting Governments of the countries to which tankers

belong, upon request of the United States of America, at any time within the five-year period mentioned in Article 20, for the purpose of discussing matters relating to tanker freeboard.

The Contracting Governments will not raise any objection to the provisions contained in this Convention in regard to tanker load line being altered as may be determined at such Conference, provided that the conclusions then reached are communicated forthwith to the Governments signatory to the present Convention and that no objection is received by the Government of the United Kingdom of Great Britain and Northern Ireland within six months of the despatch of such communication.

In Witness whereof the Plenipotentiaries have drawn up this Final Protocol which shall have the same force and the same validity as if the provisions thereof had been inserted in the text of the Convention to which it belongs.

Done at London this fifth day of July, 1930, in a single copy which shall be deposited in the archives of the Government of the United Kingdom of Great Britain and Northern Ireland, which shall transmit certified true copies thereof to all signatory Governments.

(L.S.) GUSTAV KOENIGS.
WALTER LAAS.
KARL STURM.
H. P. CAYLEY.
V. C. DUFFY.
R. GRIMARD.
A. JOHNSTON.
OSCAR BUNSTER.
GUILLERMO PATTERSON.
EMIL KROGH.
AAGE H. LARSEN.
H. P. HAGELBERG.
OCTAVIANO M. BARCA.
SEAN DULCHAONTIGH.
T. J. HEGARTY.
HERBERT B. WALKER.
DAVID ARNOTT.
LAURENS PRIOR.
HOWARD C. TOWLE.
ALBERT F. PILLSBURY.
ROBERT F. HAND.
JAS. KENNEDY.
H. W. WARLEY.
JOHN G. TAWRESEY.

E. EGGERT.
E. PALMSTIERNA.
A. H. SAASTAMOINEN.
B. BRANDT.
JEAN MARIE.
A. DE BERLHE.
H. F. OLIVER.
F. W. BATE.
ALFRED J. DANIEL.
JOHN T. EDWARDS.
ERNEST W. GLOVER.
NORMAN HILL.
C. HIPWOOD.
J. FOSTER KING.
J. MONTGOMERIE.
CHARLES J. O. SANDERS.
W. R. SPENCE.
A. SPENCER.
N. G. LELY.
G. L. CORBETT.
NOWROJEE DADABHOY ALLBLESS.
KAVAS OOKERJEE.
J. S. PAGE.
EMIL KROGH.
AAGE H. LARSEN.
H. P. HAGELBERG.
GIULIO INGIANNI.
GIUSEPPE CANTÙ.
S. NAKAYAMA.
S. IWAI.
A. OZOLS.
G. LUDERS DE NEGRI.
E. BRYN.
J. SCHÖNHEYDER.
THOMAS M. WILFORD.
C. HOLDSWORTH.
C. FOCK.
A. VAN DRIEL.
JOH. BRAUTIGAM.
LANGELER.
J. R. WIERDSMA.
M. D. FAURA.
A. POKLEWSKI-KOZIELL.
B. BAGNIEWSKI.
THOMAZ RIBEIRO DE MELLO.
CARLOS THEODORO DA COSTA.
D. BOGOMOLOFF.
S. HORACIO CARISIMO.
T. C. GIANNINI.

ANNEX I

RULES FOR DETERMINING MAXIMUM LOAD LINES OF MERCHANT SHIPS

PART I.—GENERAL

The Rules necessarily assume that the nature and stowage of the cargo, ballast, &c., are such as to secure sufficient stability for the ship.

Rule I.—*Definitions*

Steamer.—The term "steamer" includes all ships having sufficient means for mechanical propulsion, except where provided with sufficient sail area for navigation under sails alone.

A ship fitted with mechanical means of propulsion and with sail area insufficient for navigation under sails alone may be assigned a load line under Part III of these Rules.

A lighter, barge or other ship without independent means of propulsion, when towed, is to be assigned a load line under Part III of these Rules.

Sailing Ship.—The term "sailing ship" includes all ships provided with sufficient sail area for navigation under sails alone, whether or not fitted with mechanical means of propulsion.

Flush Deck Ship.—A flush deck ship is one which has no superstructure on the freeboard deck.

Superstructure.—A superstructure is a decked structure on the freeboard deck extending from side to side of the ship. A raised quarter deck is considered a superstructure.

Freeboard.—The freeboard assigned is the distance measured vertically downwards at the side of the ship amidships from the upper edge of the deck line to the upper edge of the load line mark.

Freeboard Deck.—The freeboard deck is the deck from which the freeboard is measured, and is the uppermost complete deck having permanent means of closing all openings in weather portions of the deck in accordance with Rules VIII to XVI. It is the upper deck in flush deck ships and ships with detached superstructures.

In ships having discontinuous freeboard decks within superstructures which are not intact, or which are not fitted with Class 1 closing appliances, the lowest line of the deck below the superstructure deck is taken as the freeboard deck.

Amidships.—Amidships is the middle of the length of the summer load water-line, as defined in Rule XXXII.

Rule II.—*Deck Line*

The deck line is a horizontal line twelve inches in length and one inch in breadth. It is to be marked amidships on each side of the ship, and its upper edge is to pass through the point where the continuation outwards of the upper surface of the freeboard deck intersects the outer surface of the shell. (See figure 1.) Where the deck is partly sheathed amidships, the upper edge of the deck line is to pass through the point where the continuation outwards of the upper surface of the actual sheathing at amidships intersects the outer surface of the shell.

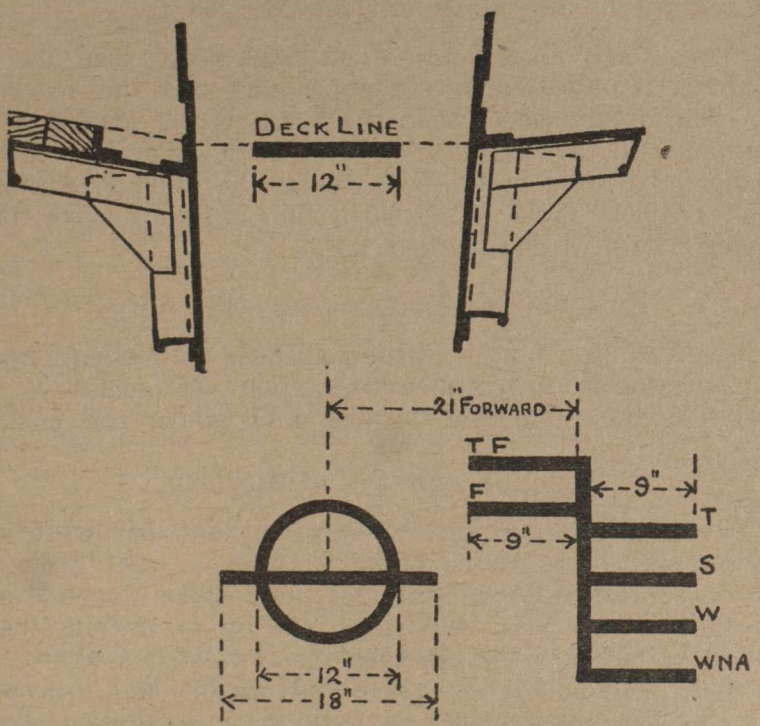

FIGURE 1

Rule III.—*Load Line Disc*

The load line disc is twelve inches in diameter and is intersected by a horizontal line eighteen inches in length and one inch in breadth, the upper edge of which passes through the centre of the disc. The disc is to be marked amidships below the deck line.

Rule IV.—*Lines to be used in connection with the Disc*

The lines which indicate the maximum load line in different circumstances and in different seasons (see Annex II) are to be horizontal lines, nine inches in length and one inch in breadth, which extend from, and are at right angles to, a vertical line marked 21 inches forward of the centre of the disc (see figure 1).

The following are the lines to be used:—

Summer Load Line.—The Summer load line is indicated by the upper edge of the line which passes through the centre of the disc and also by a line marked S.

Winter Load Line.—The Winter load line is indicated by the upper edge of a line marked W.

Winter North Atlantic Load Line.—The Winter North Atlantic load line is indicated by the upper edge of a line marked WNA.

Tropical Load Line.—The Tropical Load Line is indicated by the upper edge of a line Marked T.

Fresh Water Load Lines.—The Fresh Water load line in Summer is indicated by the upper edge of a line marked F. The difference between the Fresh Water load line in summer and the Summer load line is the allowance to be made for loading in Fresh Water at the other load lines. The Tropical Fresh Water load line is indicated by the upper edge of a line marked T.F.*

Rule V.—*Mark of Assigning Authority*

The Authority by whom the load lines are assigned may be indicated by letters measuring about 4½ inches by 3 inches marked alongside the disc and above the centre line.

Rule VI.—*Details of Marking*

The disc, lines and letters are to be painted in white or yellow on a dark ground or in black on a light ground. They are also to be carefully cut in or centre-punched on the sides of iron and steel ships, and on wood ships they are to be cut into the planking for at least one-eighth of an inch. The marks are to be plainly visible, and, if necessary, special arrangements are to be made for this purpose.

Rule VII.—*Verification of Marks.*

The International Load Line Certificate is not to be delivered to the ship until a surveyor of the Assigning Authority (acting under the provisions of Article 9 of this Convention) has certified that the marks are correctly and permanently indicated on the ship's sides.

PART II.—CONDITIONS OF ASSIGNMENT OF LOAD LINES.

The assignment of load lines is conditional upon the ship being structurally efficient and upon the provision of effective protection to ship and crew.

* Where sea-going steamers navigate a river or inland water, deeper loading is permitted corresponding to the weight of fuel, etc., required for consumption between the point of departure and the open sea.

Rules VIII to XXXI apply to ships to which minimum freeboards are assigned. In ships to which greater freeboards than the minimum are assigned, the protection is to be relatively as effective.

Openings in Freeboard and Superstructure Decks.

Rule VIII.—*Cargo and other Hatchways not protected by Superstructures.*

The construction and fitting of cargo and other hatchways in exposed positions on freeboard and superstructure decks are to be at least equivalent to the standards laid down in Rules IX to XVI.

Rule IX.—*Hatchway Coamings.*

The height of hatchway coamings on freeboard decks is to be at least 24 inches above the deck. The height of coamings on superstructure decks is to be at least 24 inches above the deck if situated within a quarter of the ship's length from the stem, and at least 18 inches if situated elsewhere.

Coamings are to be of steel, are to be substantially constructed and, where required to be 24 inches high, are to be fitted with an efficient horizontal stiffener placed not lower than 10 inches below the upper edge, and fitted with efficient brackets or stays from the stiffener to the deck, at intervals of not more than 10 feet. Where end coamings are protected, these requirements may be modified.

Rule X.—*Hatchway Covers.*

Covers to exposed hatchways are to be efficient, and where they are made of wood, the finished thickness is to be at least $2\frac{3}{8}$ inches in association with a span of not more than 5 feet. The width of each bearing surface for these hatchway covers is to be at least $2\frac{1}{2}$ inches.

Rule XI.—*Hatchway Beams and Fore-and-Afters.*

Where wood hatchway covers are fitted the hatchway beams and fore-and-afters are to be of the scantlings and spacing given in Table 1 where coamings 24 inches high are required, and as given in Table 2 where coamings 18 inches high are required. Angle bar mountings on the upper edge are to extend continuously for the full length of each beam. Wood fore-and-afters are to be steel shod at all bearing surfaces.

TABLE 1

(Coamings 24 inches in height)

HATCHWAY Beams and Fore-and-Afters for Ships 200 feet or more in length*

HATCHWAY BEAMS

Breadth of Hatchway.	Mounting.	Beams with Fore-and-Afters. Spacing Centre to Centre. 6′ 0″	8′ 0″	10′ 0″	Beams without Fore-and-Afters. Spacing Centre to Centre. 4′ 0″	5′ 0″
	ins. ins. ins.	ins. ins.	ins. ins.	ins. ins.	ins. ins.	ins. ins.
10′ 0″	3 × 3 × ·40A	11 × ·30P	12 × ·32P	14 × ·34P	9 × ·46BP	10 × ·50BP
12′ 0″	3 × 3 × ·40A	12 × ·32P	14 × ·34P	17 × ·36P	11 × ·50BP	12 × ·50BP
14′ 0″	3 × 3 × ·42A	14 × ·34P	17 × ·36P	20 × ·38P	12 × ·50BP	12 × ·32P
16′ 0″	3½ × 3 × ·42A	16 × ·36P	19 × ·38P	22 × ·38P	12 × ·32P	14 × ·34P
18′ 0″	4 × 3 × ·44A	18 × ·36P	21 × ·38P	25 × ·40P	14 × ·34P	16 × ·36P
20′ 0″	4 × 3 × ·44A	20 × ·38P	24 × ·40P	28 × ·42P	15 × ·34P	18 × ·36P
22′ 0″	4½ × 3 × ·46A	22 × ·38P	26 × ·42P	30 × ·44P	16 × ·36P	19 × ·36P
24′ 0″	5 × 3½ × ·46A	23 × ·40P	28 × ·42P	32 × ·44P	17 × ·36P	20 × ·38P
26′ 0″	5½ × 3½ × ·48A	24 × ·40P	29 × ·42P	34 × ·46P	18 × ·36P	21 × ·38P
28′ 0″	6 × 3½ × ·50A	25 × ·40P	31 × ·44P	36 × ·48P	19 × ·38P	22 × ·38P
30′ 0″	6 × 3½ × ·52A	26 × ·42P	32 × ·44P	38 × ·48P	20 × ·38P	23 × ·40P

*In ships not exceeding 100 feet in length, the depths of beams which are formed of plates and angles may be 60 per cent of the depths given above; the depths of beams and steel fore-and-afters formed of bulb angle or bulb plate section may be 80 per cent of the depths given above; the thickness of plates, bulb angles and bulb plates should correspond to the thickness tabulated for the reduced depths with a minimum thickness of ·30 inch; the depths and breadths of wood fore-and-afters may be 80 per cent of those given in the tables for side fore-and-afters, but the centre fore-and-afters must be not less than 6½ inches wide. In ships between 100 feet and 200 feet in length, the sizes of the beams and fore-and-afters are to be determined by linear interpolation.

Fore-and-Afters.

Length of Fore-and-Afters.	Mounting.	Bulb Plate. Centre Fore-and-Afters. Spacing Centre to Centre. 3′ 0″	Bulb Plate. Centre Fore-and-Afters. Spacing Centre to Centre. 4′ 0″	Bulb Plate. Centre Fore-and-Afters. Spacing Centre to Centre. 5′ 0″	Bulb Angle. Side Fore-and-Afters. Spacing Centre to Centre. 3′ 0″	Bulb Angle. Side Fore-and-Afters. Spacing Centre to Centre. 4′ 0″	Bulb Angle. Side Fore-and-Afters. Spacing Centre to Centre. 5′ 0″
	ins. ins. ins.	ins. ins.	ins. ins.	ins. ins.	ins. ins. ins.	ins. ins. ins.	ins. ins. ins.
6′ 0″	2½ × 2½ × ·36	6 × ·36	6½ × ·38	7 × ·38	6 × 3 × ·36	6½ × 3½ × ·38	7 × 3½ × ·38
8′ 0″	2½ × 2½ × ·38	7 × ·42	8 × ·44	9 × ·44	7 × 3½ × ·42	8 × 3 × ·44	9 × 3½ × ·44
10′ 0″	2½ × 2½ × ·40	8 × ·50	9½ × ·50	11 × ·50	8 × 3½ × ·50	9½ × 3½ × ·50	11 × 3½ × ·50

—	Wood Centre Fore-and Afters. Spacing Centre to Centre. 3′ 0″ D	3′ 0″ B	4′ 0″ D	4′ 0″ B	5′ 0″ D	5′ 0″ B	Wood Side Fore-and-Afters. Spacing Centre to Centre. 3′ 0″ D	3′ 0″ B	4′ 0″ D	4′ 0″ B	5′ 0″ D	5′ 0″ B
6′ 0″	5½	7	6	7	6½	7	5½	5½	6	6	6½	6
8′ 0″	6½	7	7½	7	8	7	6½	6½	7½	7	8	7
10′ 0″	8	7	8½	8	9	9	8	7	8½	8	9	9

A = Plain angle. BP = Bulb plate. P = Plate. D = Depth. B = Breadth.

Depths for hatchway beams are at the middle of the length and are measured from the top mounting to the lower edge. Depths for fore-and-afters are measured from the underside of the hatch covers to the lower edge. Sizes for intermediate lengths and spacing are obtained by interpolation. Where plates are specified, two angles of the size given for mountings, are to be fitted at the upper and at the lower part of the beam. Where bulb plates are specified, two angles, of the size given for mountings are to be fitted at the upper part of the beam or fore-and-after. Where bulb angles are specified, one angle, of the size given for mountings, is to be fitted at the upper part of the section. Where the specified flanges of an angle are of different dimensions, the larger flange is to be horizontal.

TABLE 2.

(*Coamings 18 inches in height.*)

HATCHWAY Beams and Fore-and-Afters for Ships 200 feet or more in length.*

HATCHWAY BEAMS.

Breadth of Hatchway.	Mounting.	Beams with Fore-and-Afters			Beams without Fore-and-Afters.	
		Spacing Centre to Centre.			Spacing Centre to Centre.	
		6′ 0″	8′ 0″	10′ 0″	4′ 0″	5′ 0″
	ins. ins. ins.	ins. ins.	ins. ins.	ins. ins.	ins. ins.	ins. ins.
10′ 0″	3 × 3 × ·40A	9½ × ·46BP	10½ × ·50BP	11½ × ·52BP	8 × ·40BP	9 × ·44PB
12′ 0″	3 × 3 × ·40A	11 × ·50BP	11 × ·30P	13 × ·34P	9 × ·44BP	10 × ·50BP
14′ 0″	3 × 3 × ·42A	11 × ·30P	13 × ·32P	15 × ·34P	10 × ·50BP	11½ × ·50BP
16′ 0″	3½ × 3 × ·42A	12 × ·32P	15 × ·34P	17 × ·36P	11 × ·30P	11 × ·30P
18′ 0″	4 × 3 × ·44A	14 × ·34P	17 × ·36P	19 × ·38P	11 × ·30P	12 × ·32P
20′ 0″	4 × 3 × ·44A	16 × ·36P	19 × ·38P	21 × ·38P	12 × ·32P	13 × ·34P
22′ 0″	4½ × 3 × ·46A	17 × ·36P	20 × ·38P	23 × ·40P	12½ × ·32P	14 × ·34P
24′ 0″	5 × 3½ × ·46A	18 × ·36P	*21 × ·38P	25 × ·40P	13 × ·34P	14½ × ·34P
26′ 0″	5½ × 3½ × ·48A	19 × ·38P	22 × ·38P	26 × ·42P	13½ × ·34P	15 × ·34P
28′ 0″	6 × 3½ × ·50A	20 × ·38P	23 × ·40P	27 × ·42P	14 × ·34P	16 × ·36P
30′ 0″	6 × 3½ × ·52A	21 × ·38P	24 × ·40P	28 × ·42P	15 × ·34P	17 × ·36P

* In ships not exceeding 100 feet in length, the depths of beams which are formed of plates and angles may be 60 per cent. of the depths given above; the depths of beams and steel fore-and-afters formed of bulb angle or bulb plate section may be 80 per cent. of the depths given above; the thickness of plates, bulb angles and bulb plates should correspond to the thickness tabulated for the reduced depths with a minimum thickness of ·30 inch; the depths and breadths of wood fore-and-afters may be 80 per cent. of those given in the tables for side fore-and-afters, but the centre fore-and-afters must be not less than 6½ inches wide. In ships between 100 feet and 200 feet in length, the sizes of the beams and fore-and-afters are to be determined by linear interpolation.

Length of Fore-and-Afters.	Mounting.	Bulb Plate. Centre Fore-and-Afters.			Bulb Angle. Side Fore-and-Afters.		
		Spacing Centre to Centre.			Spacing Centre to Centre.		
		3′ 0″	4′ 0″	5′ 0″	3′ 0″	4′ 0″	5′ 0″
	ins. ins. ins.	ins. ins.	ins. ins.	ins. ins.	ins. ins. ins.	ins. ins. ins.	ins. ins. ins.
6′ 0″	$2\frac{1}{2} \times 2\frac{1}{2} \times \cdot 36$	$5 \times \cdot 34$	$5\frac{1}{2} \times \cdot 34$	$6 \times \cdot 36$	$5 \times 3 \times \cdot 34$	$5\frac{1}{2} \times 3 \times \cdot 34$	$6 \times 3 \times \cdot 36$
8′ 0″	$2\frac{1}{2} \times 2\frac{1}{2} \times \cdot 38$	$6 \times \cdot 38$	$7 \times \cdot 40$	$7\frac{1}{2} \times \cdot 42$	$6 \times 3 \times \cdot 38$	$7 \times 3 \times \cdot 40$	$7\frac{1}{2} \times 3\frac{1}{2} \times \cdot 42$
10′ 0″	$2\frac{1}{2} \times 2\frac{1}{2} \times \cdot 40$	$7 \times \cdot 44$	$8 \times \cdot 46$	$9 \times \cdot 50$	$7 \times 3 \times \cdot 44$	$8 \times 3\frac{1}{2} \times \cdot 46$	$9 \times 3\frac{1}{2} \times \cdot 50$

—	Wood Centre Fore-and-Afters						Wood Side Fore-and-Afters.					
	Spacing Centre to Centre.						Spacing Centre to Centre.					
	3′ 0″		4′ 0″		5′ 0″		3′ 0″		4′ 0″		5′ 0″	
	D	B	D	B	D	B	D	B	D	B	D	B
	ins.	ins.	ins.	ins.	ins.	ins.	ins.	ins.	ins.	ins.	ins.	ins.
6′ 0″	5	7	$5\frac{1}{2}$	7	6	7	5	5	$5\frac{1}{2}$	5	6	5
8′ 0″	6	7	$6\frac{1}{2}$	7	7	7	6	5	$6\frac{1}{2}$	6	7	6
10′ 0″	7	7	$7\frac{1}{2}$	7	8	7	7	6	$7\frac{1}{2}$	7	8	7

A = Plain angle. BP = Bulb plate. P = Plate. D = Depth. B = Breadth.

Depths for hatchway beams are at the middle of the length and are measured from the top mounting to the lower edge. Depths for fore-and-afters are measured from the under side of the hatch covers to the lower edge. Sizes for intermediate lengths and spacing are obtained by interpolation. Where plates are specified, two angles, of the sizes given for mountings, are to be fitted at the upper and at the lower part of the beam. Where bulb plates are specified, two angles, of the size given for mountings, are to be fitted at the upper part of the beam or fore-and-after. Where bulb angles are specified, one angle, of the size given for mountings, is to be fitted at the upper part of the section. Where the specified flanges of an angle are of different dimensions, the larger flange is to be horizontal.

Rule XII.—*Carriers or Sockets.*

Carriers or sockets for hatchway beams and fore-and-afters are to be of steel at least ½ inch thick, and are to have a width of bearing surface of at least 3 inches.

Rule XIII.—*Cleats.*

Strong cleats at least 2½ inches wide are to be fitted at intervals of not more than 2 feet from centre to centre; the end cleats are to be placed not more than 6 inches from each corner of the hatchway.

Rule XIV.—*Battens and Wedges.*

Battens and wedges are to be efficient and in good condition.

Rule XV.—*Tarpaulins.*

At least two tarpaulins in good condition, thoroughly waterproofed and of ample strength, are to be provided for each hatchway in an exposed position on freeboard and superstructure decks. The material is to be guaranteed free from jute, and of the standard weight and quality laid down by each Administration.

Rule XVI.—*Security of Hatchway Covers.*

At all hatchways in exposed positions on freeboard and superstructure decks ring bolts or other fittings for lashings are to be provided.

Where the breadth of the hatchway exceeds 60 per cent of the breadth of the deck in way of the hatchway, and the coamings are required to be 24 inches high, fittings for special lashings are to be provided for securing the hatchway covers after the tarpaulins are battened down.

Rule XVII.—*Cargo and other Hatchways in the Freeboard Deck within Superstructures which are fitted with Closing Appliances less efficient than Class* 1.

The construction and fitting of such hatchways are to be at least equivalent to the standards laid down in Rule XVIII.

Rule XVIII.—*Hatchway Coamings and Closing Arrangements*

Cargo, coaling and other hatchways in the freeboard deck within superstructures which are fitted with Class 2 closing appliances are to have coamings at least 9 inches in height and closing arrangements as effective as those required for exposed cargo hatchways whose coamings are 18 inches high.

Where the closing appliances are less efficient than Class 2, the hatchways are to have coamings at least 18 inches in height, and are to have fittings and closing arrangements as effective as those required for exposed cargo hatchways.

Rule XIX.—*Machinery Space Openings in Exposed Positions on Freeboard and Raised Quarter Decks*

Such openings are to be properly framed and efficiently enclosed by steel casings of ample strength, and where the casings are not protected by other structures their strength is to be specially considered. Doors in such casings are to be of steel, efficiently stiffened, permanently attached, and capable of being closed and secured from both sides. The sills of openings are to be at least 24 inches above the freeboard deck and at least 18 inches above the raised quarter deck.

Fiddley, funnel, and ventilator coamings are to be as high above the deck as is reasonable and practicable. Fiddley openings are to have strong steel covers permanently attached in their proper positions.

Rule XX.—*Machinery Space Openings in Exposed Positions on Superstructure Decks other than Raised Quarter Decks.*

Such openings are to be properly framed and efficiently enclosed by strong steel casings. Doors in such cases are to be strongly constructed, permanently attached, and capable of being closed and secured from both sides. The sills of the openings are to be at least 15 inches above superstructure decks.

Fiddley, funnel and ventilator coamings are to be as high above the deck as is reasonable and practicable. Fiddley openings are to have strong steel covers permanently attached in their proper positions.

Rule XXI.—*Machinery Space Openings in the Freeboard Deck within Superstructures which are fitted with Closing Appliances less efficient than Class 1.*

Such openings are to be properly framed and efficiently enclosed by steel casings. Doors in such casings are to be strongly constructed, permanently attached, and capable of being securely closed. The sills of the openings are to be at least 9 inches above the deck where the superstructures are closed by Class 2 closing appliances, and at least 15 inches above the deck where the closing appliances are less efficient than Class 2.

Rule XXII.—*Flush Bunker Scuttles*

Flush bunker scuttles may be fitted in superstructure decks, and where so fitted are to be of iron or steel, of substantial construction, with screw or bayonet joints. Where a scuttle is not secured by hinges, a permanent chain attachment is to be provided. The position of flush bunker scuttles in small ships in special trades is to be dealt with by each Assigning Authority.

Rule XXIII.—*Companionways*

Companionways in exposed positions on freeboard decks and on decks of enclosed superstructures are to be of substantial construction. The sills of the doorways are to be of the heights specified for hatchway coamings (see Rules IX and XVIII). The doors are to be strongly constructed and capable of being closed and secured from both sides. Where the companionway is situated within a quarter of the ship's length from the stem, it is to be of steel and riveted to the deck plating.

Rule XXIV.—*Ventilators in Exposed Positions on Freeboard and Superstructure Decks*

Such ventilators to spaces below freeboard decks or decks of superstructures which are intact or fitted with Class I closing appliances are to have coamings of steel, substantially constructed, and efficiently connected to the deck by rivets spaced four diameters apart centre to centre, or by equally effective means. The deck plating at the base of the coaming is to be efficiently stiffened between the deck beams. The ventilator openings are to be provided with efficient closing arrangements.

Where such ventilators are situated on the freeboard deck, or on the superstructure deck within a quarter of the ship's length from the stem, and the closing arrangements are of a temporary character, the coamings are to be at least 36 inches in height; in other exposed positions on the superstructure deck they are to be at least 30 inches in height. Where the coaming of any ventilator exceeds 36 inches in height, it is to be specially supported and secured.

Rule XXV.—*Air Pipes*

Where the air pipes to ballast and other tanks extend above freeboard or superstructure decks, the exposed parts of the pipes are to be of substantial construction; the height from the deck to the opening is to be at least 36 inches in wells on freeboard decks, 30 inches on raised quarter decks, and 18 inches on other superstructure decks. Satisfactory means are to be provided for closing the openings of the air pipes.

Openings in the Sides of Ships

Rule XXVI.—*Gangway, Cargo and Coaling Ports, &c.*

Openings in the sides of ships below the freeboard deck are to be fitted with watertight doors or covers which, with their securing appliances, are to be of sufficient strength.

Rule XXVII.—*Scuppers and Sanitary Discharge Pipes*

Discharges led through the ship's sides from spaces below the freeboard deck are to be fitted with efficient and accessible means for preventing water from passing inboard. Each separate discharge may have an automatic non-return valve with a positive means of closing it from a position above the freeboard deck, or two automatic non-return valves without positive means of closing, provided the upper valve is situated so that it is always accessible for examination under service conditions. The positive action valve is to be readily accessible and is to be provided with means for showing whether the valve is open or closed. Cast iron is not to be accepted for such valves where attached to the sides of the ship.

Conditional upon the type and the location of the inboard ends of such openings, similar provisions may be prescribed by the Assigning Authority as to discharges from spaces within enclosed superstructures.

Where scuppers are fitted in superstructures not fitted with Class 1 closing appliances they are to have efficient means for preventing the accidental admission of water below the freeboard deck.

Rule XXVIII.—*Side Scuttles*

Side scuttles to spaces below the freeboard deck or to spaces below the superstructure deck of superstructures closed by Class 1 or Class 2 closing appliances are to be fitted with efficient inside deadlights permanently attached in their proper positions so that they can be effectively closed and secured watertight.

Where, however, such spaces in superstructures are appropriated to passengers other than steerage passengers or to crew, the side scuttles may have portable deadlights stowed adjacent to the side scuttles, provided they are readily accessible at all times on service.

The side scuttles and deadlights are to be of substantial and approved construction.

Rule XXIX.—*Guard Rails*

Efficient guard rails or bulwarks are to be fitted on all exposed portions of freeboard and superstructure decks.

Rule XXX.—*Freeing Ports*

Where bulwarks on the weather portions of freeboard or superstructure decks form "wells," ample provision is to be made for rapidly freeing the decks of water and for draining them. The minimum freeing port area on each side of the ship for each well on the freeboard deck and on the raised quarter-deck is to be that given by the following scale; the minimum area for each well on any other superstructure deck is to be one-half the area given by the scale. Where the length of the well exceeds ·7 L, the scale may be modified.

SCALE of Freeing Port Area

Length of Bulwarks in "Well" in Feet	Freeing Port Area on each side in Square Feet.
15	8·0
20	8·5
25	9·0
30	9·5
35	10·0
40	10·5
45	11·0
50	11·5
55	12·0
60	12·5
65	13·0
Above 65	1 square foot for each additional 5 feet length of bulwark.

The lower edges of the freeing ports are to be as near the deck as practicable and preferably not higher than the upper edge of the gunwale bar. Two-thirds of the freeing port area required is to be provided in the midship half of the well. In ships with less than the standard sheer the freeing port area is to be suitably increased.

All such openings in the bulwarks are to be protected by rails or bars spaced about 9 inches apart. If shutters are fitted to freeing ports, ample clearance is to be provided to prevent jamming. Hinges are to have brass pins.

Rule XXXI.—*Protection of Crew*

Gangways, lifelines or other satisfactory means are to be provided for the protection of the crew in getting to and from their quarters. The strength of houses for the accommodation of crew on flush deck steamers is to be equivalent to that required for superstructure bulkheads.

Part III.—Load Line for Steamers

Rule XXXII.—*Length* (L.)

The length used with the Rules and Freeboard Table is the length in feet on the summer load water-line from the foreside of the stem to the afterside of the rudder post. Where there is no rudder post, the length is measured from the foreside of the stem to the axis of the rudder stock. For ships with cruiser sterns, the length is to be taken as 96 per cent of the total length on the designed summer load water-line or as the length from the fore side of the stem to the axis of the rudder stock if that be the greater.

Rule XXXIII.—*Breadth* (B).

The breadth is the maximum breadth in feet amidships to the moulded line of the frame in iron or steel ships, and to the outside of the planking in wood or composite ships.

Rule XXXIV.—*Moulded Depth*

The moulded depth is the vertical distance in feet, measured amidships, from the top of the keel to the top of the freeboard deck beam at side. In wood and composite ships the distance is measured from the lower edge of the keel rabbet. Where the form at the lower part of the midship section is of a hollow character, or where thick garboards are fitted, the depth is measured from the point where the line of the flat of the bottom continued inwards cuts the side of the keel.

Rule XXXV.—*Depth for Freeboard* (D).

The depth used with the Freeboard Table is the moulded depth plus the thickness of stringer plate, or plus $\frac{T\ (L-S)}{L}$ if that be greater, where—

T is the mean thickness of the exposed deck clear of deck openings, and

S is the total length of superstructures as defined in Rule XL.

Where the topsides are of unusual form, D is the depth of a midship section having vertical topsides, standard round of beam and area of topside section equal to that in the actual midship section. Where there is a step or break in the topsides (*e.g.*, as in the Turret Deck ship) 70 per cent of the area above the step or break is included in the area used to determine the equivalent section.

In a ship without an enclosed superstructure covering at least ·6 L amidships, without a complete trunk or without

a combination of intact partial superstructures and trunk extending all fore and aft, where D is less than $\frac{L}{15}$ the depth used with the Table is not to be taken as less than $\frac{L}{15}$

Rule XXXVI.—*Coefficient of Fineness* (c).

The coefficient of fineness used with the Freeboard Table is given by—

$$c = \frac{35 \triangle}{L.B.d_1},$$

where $\triangle$ is the ship's moulded displacement in tons (excluding bossing) at a mean moulded draught d_1 which is 85 per cent of the moulded depth.

The coefficient c is not to be taken as less than ·68.

Rule XXXVII.—*Strength.*

The Assigning Authority is to be satisfied with the structural strength of ships to which freeboards are assigned.

Ships which comply with the highest standard of the rules of a Classification Society recognized by the Administration, shall be regarded as having sufficient strength for the minimum freeboards allowed under the Rules.

Ships which do not comply with the highest standard of the rules of a Classification Society recognized by the Administration, shall be assigned such increased freeboards as shall be determined by the Assigning Authority, and for guidance the following strength moduli are formulated:—

Material.—The strength moduli are based on the assumption that the structure is built of mild steel, manufactured by the open hearth process (acid or basic), and having a tensile strength of 26 to 32 tons per square inch, and an elongation of at least 16 per cent on a length of 8 inches.

Strength Deck.—The strength deck is the uppermost deck which is incorporated into and forms an integral part of the longitudinal girder within the half-length amidships.

Depth to Strength Deck (Ds).—The depth to strength deck is the vertical distance in feet amidships from the top of the keel to the top of the strength deck beam at side.

Draught (d).—The draught is the vertical distance in feet amidships from the top of the keel to the centre of the disc.

Longitudinal Modulus.—The longitudinal modulus $\frac{I}{y}$ is the moment of inertia I of the midship section about the neutral axis divided by the distance y measured from the neutral axis to the top of the strength deck beam at side, calculated in way of openings but without deductions for rivet holes. Areas are measured in square inches and distances in feet.

Below the strength deck, all continuous longitudinal members other than such parts of under deck girders as are required entirely for supporting purposes, are included. Above the strength deck, the gunwale angle bar and the extension of the sheerstrake are the only members included.

The required longitudinal modulus for effective material is expressed by f.d.B., where f is the factor obtained from the following table:—

L.	f.	L.	f.
100	1·80	360	9·40
120	2·00	380	10·30
140	2·35	400	11·20
160	2·70	420	12·15
180	3·15	440	13·10
200	3·60	460	14·15
220	4·20	480	15·15
240	4·80	500	16·25
260	5·45	520	17·35
280	6·20	540	18·45
300	6·95	560	19·60
320	7·70	580	20·80
340	8·55	600	22·00

For intermediate lengths, the value of f is determined by interpolation.

This formula applies where L does not exceed 600 feet; B is between $\frac{L}{10} + 5$ and $\frac{L}{10} + 20$, both inclusive, and $\frac{L}{Ds}$ is between 10 and 13·5, both inclusive.

Frame.—For the purpose of the frame modulus, the frame is regarded as composed of a frame angle and a reverse angle each of the same size and thickness.

Frame Modulus.—The modulus $\frac{I}{y}$ of the midship frame below the lowest tier of beams is the moment of inertia I of the frame section about the neutral axis divided by the distance y measured from the neutral axis to the extremity of the frame section, calculated without deduction for rivet and bolt holes. The modulus is measured in inch units.

The required frame modulus is expressed by

$$\frac{s\,(d-t)\,(f_1+f_2)}{1{,}000},$$

where—

s is the frame spacing in inches

t is the vertical distance in feet measured at amidships from the top of the keel to a point midway between the top of the inner bottom at side and the top of the heel bracket (see Figure 2); where there is no double bottom, t is measured to a point midway between the top of the floor at centre and the top of the floor at side.

f_1 is a coefficient depending on H, which, in ships fitted with double bottoms, is the vertical distance in feet from the middle of the beam bracket of the lowest tier of beams at side to a point midway between the top of the inner bottom at side and the top of the heel bracket (see Figure 2). Where there is no double bottom, H is measured to a point midway between the top of the floor at centre and the top of the floor at side. Where the frame obtains additional strength from the form of the ship, due allowance is made in the value of f_1.

f_2 is a coefficient depending on K, which is the vertical distance in feet from the top of the lowest tier of beams at side to a point 7 feet 6 inches above the freeboard deck at side, or, if there is a superstructure, to a point 12 feet 6 inches above the freeboard deck at side (see Figure 2). The values of f_1 and f_2 are obtained from the following tables:—

H in feet..	0	7	9	11	13	15	17	19	21	23	25
f_1.....	9	11	12·5	15	19	24	29·5	36	43	51	59

K in feet.....	0	5	10	15	20	25	30	35	40
f_2.....	0	0·5	1·0	2·0	3·0	4·5	6·5	9·0	12·0

Intermediate values are obtained by interpolation.

This formula applies where D is between 15 feet and 60 feet, both inclusive, B is between $\frac{L}{10}+5$ and $\frac{L}{10}+20$, both inclusive, $\frac{L}{D_s}$ is between 10 and 13·5, both inclusive; and the horizontal distance from the outside of the frame to the centre of the first row of pillars does not exceed 20 feet.

In single deck ships of ordinary form, where H does not exceed 18 feet, the frame modulus determined by the preceding method is multiplied by the factor f_3 where

$$f_3 = \cdot 50 + \cdot 05\ (H - 8).$$

Where the horizontal distance from the outside of the frame to the centre of the first row of pillars exceeds 20 feet, the Assigning Authority is to be satisfied that sufficient additional strength is provided.

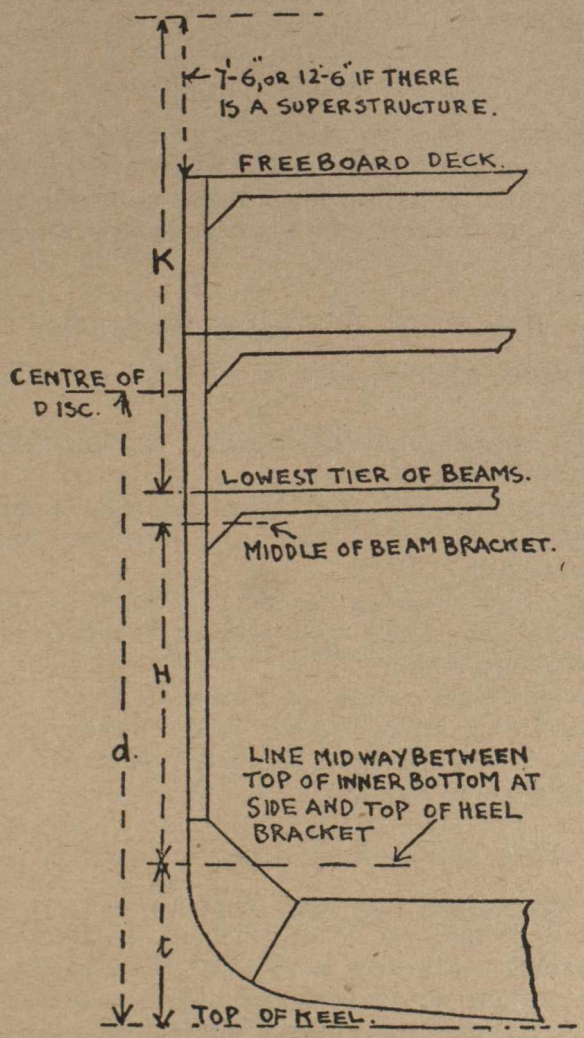

FIGURE 2

Superstructures

Rule XXXVIII.—*Height of Superstructure*

The height of a superstructure is the least vertical height measured from the top of the superstructure deck to the top of the freeboard deck beams minus the difference between D and the moulded depth (*see* Rules XXXIV and XXXV).

Rule XXXIX.—*Standard Height of Superstructure*

The standard height of a raised quarter deck is 3 feet for ships up to and including 100 feet in length, 4 feet for ships 250 feet in length and 6 feet for ships 400 feet in length and above. The standard height of any other superstructure is 6 feet for ships up to and including 250 feet in length and 7 feet 6 inches for ships 400 feet in length and above. The standard height at intermediate lengths is obtained by interpolation.

Rule XL.—*Length of Superstructure* (S).

The length of a superstructure is the mean covered length of the parts of the superstructure which extend to the sides of the ship and lie within lines drawn perpendicular to the extremities of the Summer load water-line, as defined in Rule XXXII.

Rule XLI.—*Enclosed Superstructure*

A detached superstructure is regarded as enclosed only where—

(*a*) the enclosing bulkheads are of efficient construction (*see* Rule XLII);

(*b*) the access openings in these bulkheads are fitted with Class 1 or Class 2 closing appliances (see *Rules* XLIII and XLIV);

(*c*) all other openings in sides or ends of the superstructure are fitted with efficient weathertight means of closing; and

(*d*) independent means of access to crew, machinery, bunker and other working spaces within bridges and poops are at all times available when the bulkhead openings are closed.

Rule XLII.—*Superstructure Bulkheads*

Bulkheads at exposed ends of poops, bridges and forecastles are deemed to be of efficient construction where the Assigning Authority is satisfied that, in the circumstances, they are equivalent to the following standard for ships with minimum freeboards under which standard the stiffeners and plating are of the scantlings given in Table 3, the stiffeners are spaced 30 inches apart, the stiffeners on poop and bridge front bulkheads have efficient end connections, and those on after bulkheads of bridges and forecastles extend for the whole distance between the margin angles of the bulkheads.

TABLE 3

EXPOSED Bulkheads of Superstructures of Standard Height

Bridge Front Bulkheads Unprotected Bulkheads of Poops ·4L or more in Length.		Bulkheads of Poops Partially Protected or less in Length than ·4L.		After Bulkheads of Bridges and Forecastles.	
Length of Ship.	Bulb Angle Stiffeners.	Length of Ship.	Plain Angle Stiffeners.	Length of Ship.	Plain Angle Stiffeners.
Feet.	Inches.	Feet.	Inches.	Feet.	Inches.
Under 160	$5\frac{1}{2}\times3\times\cdot30$	Under 150	$3\times2\frac{1}{2}\times\cdot30$	Under 150	$2\frac{1}{2}\times2\frac{1}{2}\times\cdot26$
160	$6\times3\times\cdot32$	150	$3\frac{1}{2}\times2\frac{1}{2}\times\cdot32$	150	$3\times2\frac{1}{2}\times\cdot28$
200	$6\frac{1}{2}\times3\times\cdot34$	200	$4\times3\times\cdot34$	250	$3\frac{1}{2}\times3\times\cdot30$
240	$7\times3\times\cdot36$	250	$4\frac{1}{2}\times3\times\cdot36$	350	$4\times3\times\cdot32$
280	$7\frac{1}{2}\times3\times\cdot38$	300	$5\times3\times\cdot38$		
320	$8\times3\times\cdot40$	350	$5\frac{1}{2}\times3\times\cdot42$		
360	$8\frac{1}{2}\times3\times\cdot42$	400	$6\times3\times\cdot44$		
400	$9\times3\times\cdot44$	450	$6\frac{1}{2}\times3\frac{1}{2}\times\cdot46$		
440	$9\frac{1}{2}\times3\frac{1}{2}\times\cdot46$	500	$7\times3\frac{1}{2}\times\cdot48$		
480	$10\times3\frac{1}{2}\times\cdot48$	550	$7\times3\frac{1}{2}\times\cdot50$		
520	$10\frac{1}{2}\times3\frac{1}{2}\times\cdot50$				
560	$11\times3\frac{1}{2}\times\cdot52$				

Length of Ship.	Bulkhead Plating.	Length of Ship.	Bulkhead Plating.	Length of Ship.	Bulkhead Plating.
Feet.	Inch.	Feet.	Inch.	Feet.	Inch.
200 and under	·3	160 and under	·24	160 and under	·20
380 and above	·44	400 and above	·38	400 and above	·30

For ships intermediate in length the thicknesses of bulkhead plating are obtained by interpolation.

Appliances for Closing Access Openings in Bulkheads at ends of Detached Superstructures

Rule XLIII.—*Class 1 Closing Appliances*

These appliances are of iron and steel, are in all cases permanently and strongly attached to the bulkhead, are framed, stiffened and fitted so that the whole structure is of equivalent strength to the unpierced bulkhead, and are weathertight when closed. The means for securing these appliances are permanently attached to the bulkhead or to the appliances, and the latter are so arranged that they can be closed and secured from both sides of the bulkhead or from the deck above. The sills of the access openings are at least 15 inches above the deck.

Rule XLIV.—*Class 2 Closing Appliances*

These appliances are (*a*) strongly framed hard wood hinged doors, which are not more than 30 inches wide nor less than 2 inches thick; or (*b*) shifting boards fitted for the full height of the opening in channels riveted to the bulkhead, the shifting boards being at least 2 inches thick where the width of opening is 30 inches or less, and increased in thickness at the rate of 1 inch for each additional 15 inches of width, or (*c*) portable plates of equal efficiency.

Temporary Appliances for Closing Openings in Superstructure Decks

Rule XLV

Temporary closing appliances for middle line openings in the deck of an enclosed superstructure consist of—

(*a*) a steel coaming not less than 9 inches in height efficiently riveted to the deck;

(*b*) hatchway covers as required by Rule X, secured by hemp lashings; and

(*c*) hatchway supports as required by Rules XI and XII and Table 1 or 2.

Effective Length of Detached Superstructures

Rule XLVI.—*General*

Where exposed bulkheads at the ends of poops, bridges, and forecastles are not of efficient construction (*see* Rule XLII) they are considered as non-existent.

Where in the side plating of a superstructure there is an opening not provided with permanent means of closing, the part of the superstructure in way of the opening is regarded as having no effective length.

Where the height of a superstructure is less than the standard its length is reduced in the ratio of the actual to the standard height. Where the height exceeds the standard, no increase is made in the length of the superstructure.

Rule XLVII.—*Poop*

Where there is an efficient bulkhead and the access openings are fitted with Class 1 closing appliances, the length to the bulkhead is effective. Where the access openings in an efficient bulkhead are fitted with Class 2 closing appliances and the length to the bulkhead is ·5 L or less, 100 per cent of that length is effective; where the length is ·7 L or more, 90 per cent of that length is effective; where the length is between ·5 L and ·7 L, an intermediate percentage of that length is effective; where an allowance is given for an efficient adjacent trunk (*see* Rule LI), 90 per cent

of the length to the bulkhead is to be taken as effective. Fifty per cent of the length of an open poop or of an open extension beyond an efficient bulkhead is effective.

Rule XLVIII.—*Raised Quarter Deck*

Where there is an efficient intact bulkhead, the length to the bulkhead is effective. Where the bulkhead is not intact, the superstructure is considered as a poop of less than standard height.

Rule XLIX.—*Bridge*

Where there is an efficient bulkhead at each end, and the access openings in the bulkheads are fitted with Class 1 closing appliances, the length between the bulkheads is effective.

Where the access openings in the forward bulkhead are fitted with Class 1 closing appliances and the access openings in the after bulkhead with Class 2 closing appliances, the length between the bulkheads is effective; where an allowance is given for an efficient trunk, adjacent to the after bulkhead (*see* Rule LI), 90 per cent of the length is effective. Where the access openings in both bulkheads are fitted with Class 2 closing appliances, 90 per cent of the length between the bulkheads is effective. Where the access openings in the forward bulkhead are fitted with Class 1 or Class 2 closing appliances and the access openings in the after bulkhead have no closing appliances, 75 per cent of the length between the bulkheads is effective. Where the access openings in both bulkheads have no closing appliances, 50 per cent of the length is effective. 75 per cent of the length of an open extension beyond the after bulkhead, and 50 per cent of that beyond the forward bulkhead, are effective.

Rule L.—*Forecastle*

Where there is an efficient bulkhead and the access openings are fitted with Class 1 or Class 2 closing appliances, the length to the bulkhead is effective. Where no closing appliances are fitted and the sheer forward of amidships is not less than the standard sheer, 100 per cent of the length of the forecastle forward of ·1 L from the forward perpendicular is effective; where the sheer forward is half the standard sheer or less, 50 per cent of that length is effective; and where the sheer forward is intermediate between the standard and half the standard sheer, an intermediate percentage of that length is effective. Fifty per cent of the length of an open extension beyond the bulkhead or beyond ·1 L from the forward perpendicular is is effective.

28835—12½

Rule LI.—*Trunk*

A trunk or similar structure which does not extend to the sides of the ship is regarded as efficient provided that—

(*a*) the trunk is at least as strong as a superstructure;

(*b*) the hatchways are in the trunk deck, and comply with the requirements of Rules VIII to XVI, and the width of the trunk deck stringer provides a satisfactory gangway and sufficient lateral stiffness;

(*c*) a permanent working platform fore and aft fitted with guard rails is provided by the trunk deck, or by detached trunks connected to other superstructures by efficient permanent gangways;

(*d*) ventilators are protected by the trunk, by watertight covers or by equivalent means;

(*e*) open rails are fitted on the weather portions of the freeboard deck in way of the trunk for at least half their length;

(*f*) the machinery casings are protected by the trunk, by a superstructure of standard height, or by a deck house of the same height and of equivalent strength.

Where access openings in poop and bridge bulkheads are fitted with Class 1 closing appliances, 100 per cent of the length of an efficient trunk reduced in the ratio of its mean breadth to B is added to the effective length of the superstructures. Where the access openings in these bulkheads are not fitted with Class 1 closing appliances 90 per cent is added.

The standard height of a trunk is the standard height of a bridge.

Where the height of the trunk is less than the standard height of a bridge, the addition is reduced in the ratio of the actual to the standard height; where the height of hatchway coamings on the trunk deck is less than the standard height of coamings (*see* Rule IX), a reduction from the actual height of trunk is to be made which corresponds to the difference between the actual and the standard height of coamings.

Effective Length of Enclosed Superstructures with Middle Line Openings

Rule LII.—*Enclosed Superstructure with Middle Line Openings in the deck not Provided with Permanent Means of Closing*

Where there is an enclosed superstructure with one or more middle line openings in the deck not provided with permanent means of closing (*see* Rules VIII to XVI), the

effective length of the superstructure is determined as follows:—

(1) Where efficient temporary closing appliances are not provided for the middle line deck openings (*see* Rule XLV), or the breadth of opening is 80 per cent or more of the breadth B_1, of the superstructure deck at the middle of the opening, the ship is considered as having an open well in way of each opening, and freeing ports are to be provided in way of this well. The effective length of superstructure between openings is governed by Rules XLVII, XLIX, and L.

(2) Where efficient temporary closing appliances are provided for middle line deck openings and the breadth of opening is less than $\cdot 8\ B_1$, the effective length is governed by Rules XLVII, XLIX, and L, except that where access openings in 'tween deck bulkheads are closed by Class 2 closing appliances, they are regarded as being closed by Class 1 closing appliances in determining the effective length. The total effective length is obtained by adding to the length determined by (1) the difference between this length and the length of the ship modified in the ratio of—

$\frac{B_1 - b}{B_1}$ where b=breadth of deck opening;

where $\frac{B_1 - b}{B_1}$ is greater than $\cdot 5$ it is taken as $\cdot 5$.

Deductions for Superstructures

Rule LIII.—*Deductions for Superstructures*

Where the effective length of superstructures is $1 \cdot 0$ L, the deduction from the freeboard is 14 inches at 80 feet length of ship, 34 inches at 280 feet length, and 42 inches at 400 feet length and above; deductions at intermediate lengths are obtained by interpolation. Where the total effective length of superstructures is less than $1 \cdot 0$ L the deduction is a percentage obtained from the following Table:—

Superstructures.	Total Effective Length of Superstructure (E).											Line
	0.	·1 L.	·2 L.	·3 L.	·4 L.	·5 L.	·6 L.	·7 L.	·8 L.	·9 L.	1·0 L.	
	Per cent.	Per cent.	Per cent.	Per cent.	Per cent.	Per cent.	Per cent.	Per cent.	Per cent.	Per cent.	Per cent.	
All types with forecastle and without detached bridge.....	0	5	10	15	23·5	32	46	63	75·3	87·7	100	A
All types with forecastle and detached bridge*.....	0	6·3	12·7	19	27·5	36	46	63	75·3	87·7	100	B

*Where the effective length of a detached bridge is less than ·2 L the percentages are obtained by interpolation between lines B and A.
Where no forecastle is fitted the above percentages are reduced by 5.
Percentages for intermediate lengths of superstructures are obtained by interpolation.

Sheer

Rule LIV.—*General*

The sheer is measured from the deck at side to a line of reference drawn parallel to the keel through the sheer line at amidships.

In ships designed to trim by the stern in service, the sheer may be measured in relation to the load line, provided an additional mark is placed at ·25 L forward of amidships, to indicate the assigned load line. This mark is to be similar to the load line disc amidships.

In flush deck ships and in ships with detached superstructures the sheer is measured at the freeboard deck.

In ships with topsides of unusual form in which there is a step or break in the topsides, the sheer is considered in relation to the equivalent depth amidships (*see* Rule XXXV).

In ships with a superstructure of standard height which extends over the whole length of the freeboard deck, the sheer is measured at the superstructure deck; where the height exceeds the standard, the sheer may be considered in relation to the standard height.

Where a superstructure is intact or access openings in its enclosing bulkheads are fitted with Class 1 closing appliances, and the superstructure deck has at least the same sheer as the exposed freeboard deck, the sheer of the enclosed portion of the freeboard deck is not taken into account.

Rule LV.—*Standard Sheer Profile*

The ordinates (in inches) of the standard sheer profile are given in the following Table, where L is the number of feet in the length of the ship:—

Station.	Ordinate	Factor.
A.P.	·1 L + 10	1
1/6 L from A.P.	·0445 L + 4·45	4
1/3 L from A.P.	·011 L + 1·1	2
Amidships	0	4
1/3 L from F.P.	·022 L + 2·2	2
1/6 L from F.P.	·089 L + 8·9	4
F.P.	·2 L + 20	1

A.P.=After end of Summer load water-line. F.P.=Fore end of Summer load water-line.

Rule LVI.—*Measurement of Variations from Standard Sheer Profile*

Where the sheer profile differs from the standard, the seven ordinates of each profile are multiplied by the appropriate factors given in the table of ordinates. The differ-

ence between the sums of the respective products, divided by 18, measures the deficiency or excess of sheer. Where the after half of the sheer profile is greater than the standard and the forward half is less than the standard, no credit is allowed for the part in excess and the deficiency only is measured.

Where the forward half of the sheer profile exceeds the standard, and the after portion of the sheer profile is not less than 75 per cent of the standard, credit is allowed for the part in excess; where the after part is less than 50 per cent of the standard no credit is given for the excess sheer forward. Where the after sheer is between 50 per cent and 75 per cent of the standard, intermediate allowances may be granted for excess sheer forward.

Rule LVII.—*Correction for Variations from Standard Sheer Profile*

The correction for sheer is the deficiency or excess of sheer (*see* Rule LVI), multiplied by $\cdot 75 - \frac{S}{2L}$, where S is the total length of superstructure, as defined in Rule XL.

Rule LVIII.—*Addition for Deficiency in Sheer*

Where the sheer is less than the standard, the correction for deficiency in sheer (*see* Rule LVII) is added to the freeboard.

Rule LIX.—*Deduction for Excess Sheer*

In flush deck ships and in ships where an enclosed superstructure covers ·1 L before and ·1 L abaft amidships, the correction for excess of sheer (*see* Rule LVII) is deducted from the freeboard; in ships with detached superstructures where no enclosed superstructure covers amidships, no deduction is made from the freeboard; where an enclosed superstructure covers less than ·1 L before and ·1 L abaft amidships, the deduction is obtained by interpolation. The maximum deduction for excess sheer is $1\frac{1}{2}$ inches at 100 feet and increases at the rate of $1\frac{1}{2}$ inches for each additional 100 feet in the length of the ship.

Round of Beam

Rule LX.—*Standard Round of Beam*

The standard round of beam of the freeboard deck is one-fiftieth of the breadth of the ship.

Rule LXI.—*Round of Beam Correction*

Where the round of beam of the freeboard deck is greater or less than the standard, the freeboard is decreased or increased respectively by one-fourth of the difference between the actual and the standard round of beam, multiplied by the proportion of the length of the freeboard deck not covered by enclosed superstructures. Twice the standard round of beam is the maximum for which allowance is given.

Minimum Freeboards

Rule LXII.—*Summer Freeboard*

The minimum freeboard in Summer is the freeboard derived from the Freeboard Table after corrections for departures from the standards and after deduction for superstructures.

The freeboard in salt water measured from the intersection of the upper surface of the freeboard deck with the outer surface of the shell is not to be less than 2 inches.

Rule LXIII.—*Tropical Freeboard*

The minimum freeboard in the Tropical Zone is the freeboard obtained by a deduction from the Summer freeboard of $\frac{1}{4}$ inch per foot of Summer draught measured from the top of the keel to the centre of the disc.

The freeboard in salt water measured from the intersection of the upper surface of the freeboard deck with the outer surface of the shell is not to be less than 2 inches.

Rule LXIV.—*Winter Freeboard*

The minimum freeboard in Winter is the freeboard obtained by an addition to the Summer freeboard of $\frac{1}{4}$ inch per foot of Summer draught, measured from the top of the keel to the centre of the disc.

Rule LXV.—*Winter North Atlantic Freeboard.*

The minimum freeboard for ships not exceeding 330 feet in length on voyages across the North Atlantic, North of latitude 36° N., during the winter months, is the Winter freeboard plus two inches; for ships over 330 feet in length it is the Winter freeboard.

Rule LXVI.—*Fresh Water Freeboard.*

The minimum freeboard in fresh water of unit density is the freeboard obtained by deducting from the minimum freeboard in salt water $\frac{\Delta}{40\,T}$ inches, where

$\triangle$ = displacement in salt water in tons at the Summer load water-line, and

T = tons per inch immersion in salt water at the Summer load water-line.

Where the displacement at the Summer load water-line cannot be certified, the deduction is to be $\frac{1}{4}$ inch per foot of Summer draught, measured from the top of the keel to the centre of the disc.

Rule LXVII.—*Freeboard Table for Steamers.*

BASIC Minimum Summer Freeboards for Steamers which Comply with the Standards Laid Down in the Rules.

L.	Free-board.	L.	Free-board.	L.	Free-board.	L.	Free-board.
(Feet).	(Inches.)	(Feet.)	(Inches.)	(Feet.)	(Inches.)	(Feet.)	(Inches.)
80	8·0	250	32·3	420	77·8	590	127·0
90	9·0	260	34·4	430	80·9	600	129·5
100	10·0	270	36·5	440	84·0	610	132·0
110	11·0	280	38·7	450	87·1	620	134·4
120	12·0	290	41·0	460	90·2	630	136·8
130	13·0	300	43·4	470	93·3	640	139·1
140	14·2	310	45·9	480	96·3	650	141·4
150	15·5	320	48·4	490	99·3	660	143·7
160	16·9	330	51·0	500	102·3	670	145·9
170	18·3	340	53·7	510	105·2	680	148·1
180	19·8	350	56·5	520	108·1	690	150·2
190	21·4	360	59·4	530	110·9	700	152·3
200	23·1	370	62·4	540	113·7	710	154·4
210	24·8	380	65·4	550	116·4	720	156·4
220	26·6	390	68·4	560	119·1	730	158·5
230	28·5	400	71·5	570	121·8	740	160·5
240	30·3	410	74·6	580	124·4	750	162·5

(i) The minimum freeboards for flush deck steamers are obtained by an addition to the above Table at the rate of $1\frac{1}{2}$ inches for every 100 feet of length.

(ii) The freeboards at intermediate lengths are obtained by interpolation.

(iii) Where c exceeds ·68, the freeboard is multiplied by the factor $\frac{c + \cdot 68}{1 \cdot 36}$.

(iv) Where D exceeds $\frac{L}{15}$ the freeboard is increased by $\left\{D - \frac{L}{15}\right\}$ R inches, where R is $\frac{L}{130}$ at lengths less than 390 feet, and 3 at 390 feet length and above.

In a ship with an enclosed superstructure covering at least ·6 L amidships, with a complete trunk, or with a combination of intact partial superstructures and trunk which extends all fore and aft, where D is less than $\frac{L}{15}$, the free-

board is reduced at the above rate. Where the height of superstructures or trunk is less than the standard height, the reduction is in the ratio of the actual to the standard height.

(v) Where the actual depth to the surface of the freeboard deck amidships is greater or less than D, the difference between the depts (in inches) is added to or deducted from the freeboard.

Part IV.—Load Lines for Sailing Ships

Rule LXVIII.—*Lines to be Used in Connection with the Disc.*

Winter and Tropical load lines are not marked on sailing ships. The maximum load line to which sailing ships may be laden in salt water in Winter and in the Tropical Zone is the centre of the disc (*see* Figure 3).

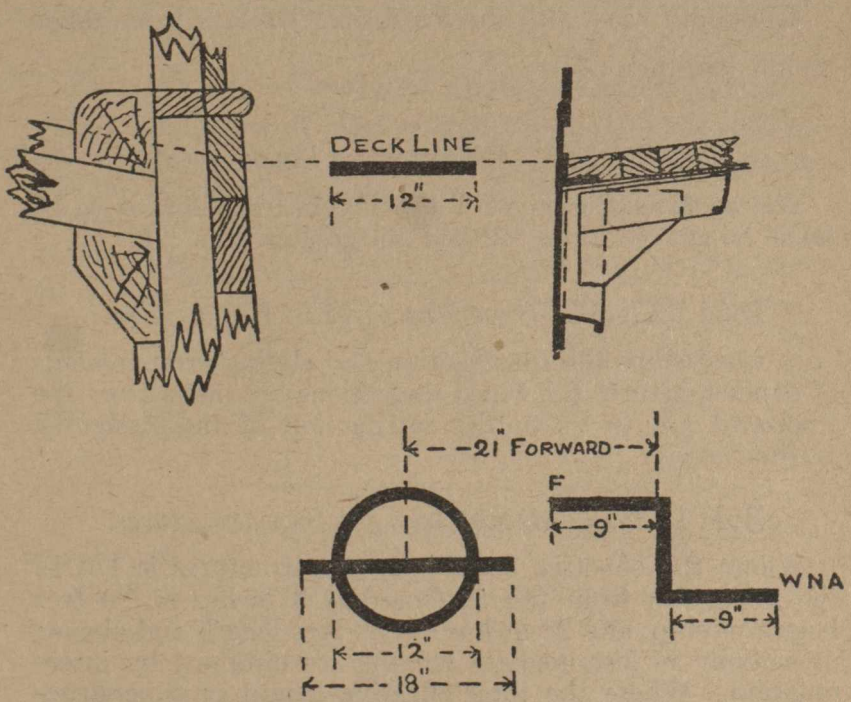

Figure 3

Rule LXIX.—*Conditions of Assignment of Load Line*

The conditions of assignment are those contained in Part II of these Rules.

Rule LXX.—*Computation of Freeboard.*

Freeboards are computed from the Freeboard Table for Sailing Ships in the same manner as the freeboards for steamers are computed from the Freeboard Table for Steamers, except as follows:—

Rule LXXI.—*Depth for Freeboard* (D).

In sailing ships having a greater rate of rise of floor than $1\frac{1}{2}$ inches per foot, the vertical distance from the top of keel (Rule XXXIV), is reduced by half the difference between the total rise of floor at the half-breadth of the ship and the total rise at $1\frac{1}{2}$ inches per foot. $2\frac{1}{2}$ inches per foot of half-breadth is the maximum rate of rise for which a deduction is made.

Where the form at the lower part of the midship section is of a hollow character, or thick garboards are fitted, the depth is measured from the point where the line of the flat of the bottom continued inwards cuts the side of the keel.

The depth used with the Freeboard Table is to be taken as not less than $\frac{L}{12}$.

Rule LXXII.—*Coefficient of Fineness* (c).

The coefficient used with the Freeboard Table is to be taken as not less than ·62 and not greater than ·72.

Rule LXXIII.—*Superstructures in Wood Ships.*

In wood ships the construction and closing arrangements of superstructures for which deductions are made from the freeboard are to be to the satisfaction of the Assigning Authority.

Rule LXXIV.—*Deductions for Superstructures.*

Where the effective length of superstructures is 1·0 L, the deduction from the freeboard is 3 inches at 80 feet length of ship, and 28 inches at 330 feet length and above; deductions at intermediate lengths are obtained by interpolation. Where the total effective length of superstructures is less than 1·0 L, the deduction is a percentage obtained from the following Table:—

Type of Superstructures.	Total Effective Length of Superstructures (E).											Line.
	0	·1 L	·2 L	·3 L	·4 L	·5 L	·6 L	·7 L	·8 L	·9 L	1·0L	
	%	%	%	%	%	%	%	%	%	%	%	
All types without Bridge.	0	7	13	17	23·5	30	47½	70	80	90	100	A
All types with Bridge*....	0	7	14·7	22	32	42	56	70	80	90	100	B

*Where the effective length of Bridge is less than ·2 L, the percentages are obtained by interpolation between lines B and A. Percentages for intermediate lengths of superstructures are obtained by interpolation.

Rule LXXV.—*Minimum Freeboards.*

No addition to the freeboard is required for Winter freeboard, nor is a deduction permitted for Tropical freeboard.

An increase in freeboard of 3 inches is made for voyages across the North Atlantic North of latitude 36° N. during the winter months.

In computing the fresh water freeboard for a wood ship, the draught is measured from the lower edge of the rabbet of keel to the centre of the disc.

Rule LXXVI.—*Freeboard Table for Sailing Ships*

Minimum Summer, Winter, and Tropical Freeboards for Iron and Steel Flush Deck Sailing Ships, which comply with the Standards laid down in the Rules.

L.	Freeboard.	L.	Freeboard.	L.	Freeboard.	L.	Freeboard.
Feet.	Inches.	Feet.	Inches.	Feet.	Inches.	Feet .	Inches.
80	9·2	140	21·3	200	35·4	270	53·5
90	11·0	150	23·5	210	37·9	280	56·3
100	12·9	160	25·8	220	40·4	290	59·1
110	14·9	170	28·2	230	42·9	300	61·9
120	17·0	180	30·6	240	45·5	310	64·7
130	19·1	190	33·0	250	48·1	320	67·6
				260	50·8	330	70·5

(i) The freeboards at intermediate lengths are obtained by interpolation.

(ii) Where c exceeds ·62, the freeboard is multiplied by the factor $\frac{c + \cdot 62}{1 \cdot 24}$

(iii) Where D exceeds $\frac{L}{12}$ the freeboard is increased by

$$\left(D - \frac{L}{12} \right) \times \left(1 + \frac{L}{250} \right) \text{ inches.}$$

(iv) Where the actual depth to the surface of the freeboard deck amidships is greater or less than D, the difference between the depths (in inches) is added to or deducted from the freeboard.

Rule LXXVII.—*Freeboard for Wood Sailing Ships*

The freeboard for a wood sailing ship is the final freeboard the ship would obtain if she were of iron and steel, with the addition of such penalties as the Assigning Authority may determine, having regard to the classification, construction, age and condition of the ship.

Wood ships of primitive build such as dhows, junks, prahus, etc., are to be dealt with by the Administration so far as is reasonable and practicable under the Rules for Sailing Ships.

Part V.—Load Lines for Steamers carrying Timber Deck Cargoes

Definitions

Timber Deck Cargo.—The term "timber deck cargo" means a cargo of timber carried on an uncovered part of a freeboard or superstructure deck. The term does not include wood pulp or similar cargo.

Timber Load Line.—A timber load line is a special load line to be used only when the ship is carrying a timber deck cargo in compliance with the following conditions and regulations:—

Rule LXXVIII.—*Marks on the Ship's Sides*

Timber Load Lines.—The lines which indicate the maximum timber load lines in different circumstances and at different seasons are to be horizontal lines, 9 inches in length and 1 inch in breadth, which extend from, and are at right angles to, a vertical line marked 21 inches abaft the centre of the disc (*see* Figure 4). They are to be marked and verified similarly to the ordinary load lines (see Rules V to VII).

The Summer Timber Load Line is indicated by the upper edge of a line marked LS.

The Winter Timber Load Line is indicated by the upper edge of a line marked LW.

The Winter North Atlantic Timber Load Line is indicated by the upper edge of a line marked LWNA.

The Tropical Timber Load Line is indicated by the upper edge of a line marked LT.

The Fresh Water Timber Load Line in Summer is indicated by the upper edge of a line marked LF. The difference between the Fresh Water Timber load line in Summer and the Summer Timber load line is the allowance to

be made for loading in fresh water at the other Timber load lines. The Fresh Water Timber load line in the Tropical Zone is indicated by the upper edge of a line marked LTF.*

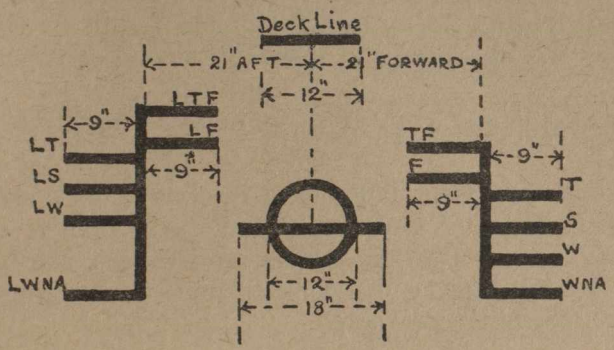

FIGURE 4

Supplementary Conditions of Assignment and Regulations for Deeper Loading

Rule LXXIX.—*Construction of Ship*

The structure of the ship is to be of sufficient strength for the deeper draught allowed and for the weight of the deck cargo.

Rule LXXX.—*Superstructures*

The ship is to have a forecastle of at least standard height and at least 7 per cent of the length of the ship, and, in addition, a poop, or a raised quarter deck with a strong steel hood or deck house fitted aft.

Rule LXXXI.—*Machinery Casings*

Machinery casings on the freeboard deck are to be protected by a superstructure of at least standard height, unless the machinery casings are of sufficient strength and height to permit of the carriage of timber alongside.

Rule LXXXII.—*Double Bottom Tanks*

Double bottom tanks where fitted within the midship half length of the ship are to have adequate longitudinal subdivision.

* Where seagoing steamers navigate a river or inland water, deeper loading is permitted corresponding to the weight of fuel, &c., required for consumption between the point of departure and the open sea.

Rule LXXXIII.—*Bulwarks*

The ship must be fitted either with permanent bulwarks at least 3 feet 3 inches high, specially stiffened on the upper edge and supported by strong bulwark stays attached to the deck in the way of the beams and provided with necessary freeing ports, or with efficient rails of the same height as the above and of specially strong construction.

Rule LXXXIV.—*Deck Openings covered by Timber Deck Cargo*

Openings to spaces below the freeboard deck are to be securely closed and battened down. All fittings, such as hatchway beams, fore-and-afters, and covers, are to be in place. Where hold ventilation is needed, the ventilators are to be efficiently protected.

Rule LXXXV.—*Stowage*

The wells on the freeboard deck are to be filled with timber stowed as solidly as possible, to at least the standard height of a bridge.

On a ship within a seasonal winter zone in winter, the height of the deck cargo above the freeboard deck is not to exceed one-third of the extreme breadth of the ship.

All timber deck cargo is to be compactly stowed, lashed and secured. It must not interfere in any way with the navigation and necessary work of the ship, or with the provision of a safe margin of stability at all stages of the voyage, regard being given to additions of weight, such as those due to absorption of water and to losses of weight such as those due to consumption of fuel and stores.

Rule LXXXVI.—*Protection of Crew, Access to Machinery Space, &c.*

Safe and satisfactory access to the quarters of the crew, to the machinery space and to all other parts used in the necessary work of the ship, is to be available at all times. Deck cargo in way of openings which give access to such parts is to be so stowed that the openings can be properly closed and secured against the admission of water. Efficient protection for the crew in the form of guard rails or life lines, spaced not more than 12 inches apart vertically, is to be provided on each side of the deck cargo to a height of at least 4 feet above the cargo. The cargo is to be made sufficiently level for gangway purposes.

Rule LXXXVII.—*Steering Arrangements*

Steering arrangements are to be effectively protected from damage by cargo, and, as far as practicable, are to be accessible. Efficient provision is to be made for steer-

ing in the event of a breakdown in the main steering arrangements.

Rule LXXXVIII.—*Uprights*

Uprights when required by the nature of the timber are to be of adequate strength and may be of wood or metal; the spacing is to be suitable for the length and character of timber carried, but is not to exceed 10 feet. Strong angles or metal sockets efficiently secured to the stringer plate or equally efficient means are to be provided for securing the uprights.

Rule LXXXIX.—*Lashings*

Timber deck cargo is to be efficiently secured throughout its length by independent overall lashings spaced not more than 10 feet apart.

Eye plates for these lashings are to be riveted to the sheer-strake at intervals of not more than 10 feet, the distance from an end bulkhead of a superstructure to the first eye plate being not more than 6 feet 6 inches. Additional eye plates may be fitted on the stringer plate.

Overall lashings are to be in good condition and are to be not less than $\frac{3}{4}$ inch close link chain or flexible wire rope of equivalent strength, fitted with sliphooks and stretching screws, which are to be accessible at all times. Wire rope lashings are to have a short length of long link chain to permit the length of lashings to be regulated.

When timber is in lengths less than 12 feet, the spacing of the lashings is to be reduced to suit the length of timber or other suitable provision made.

When the spacing of the lashings is 5 feet or less, the size of the lashing may be reduced, but not less than $\frac{1}{2}$ inch chain or equivalent wire rope is to be used.

All fittings required for securing the lashings are to be of strength corresponding to the strength of the lashings.

On superstructure decks, uprights, where fitted, are to be about 10 feet apart and are to be secured by athwartship lashings of ample strength.

Rule XC.—*Plans*

Plans showing the fittings and arrangements for stowing and securing timber deck cargoes in compliance with the foregoing conditions and regulations are to be submitted to the Assigning Authority.

Freeboard

Rule XCI.—*Computation of Freeboard*

Where the Assigning Authority is satisfied that the ship is suitable and that the conditions and arrangements are at least equal to the foregoing requirements for the carriage of timber deck cargo, the Summer freeboards computed in accordance with the Rules and Tables in Part III may be modified to give special timber freeboards, by substituting the following percentages for those in Rule LIII:—

TOTAL Effective Length of Superstructures

—	0	·1 L	·2 L	·3 L	·4 L	·5 L	·6 L	·7 L	·8 L	·9 L	1·0 L
	%	%	%	%	%	%	%	%	%	%	%
All types.	20	30·75	41·5	52·25	63	69·25	75·5	81·5	87·5	93·75	100

The Winter Timber freeboard is to be obtained by adding to the Summer Timber freeboard one-third of an inch per foot of the moulded Summer Timber draught.

The Winter North Atlantic Timber freeboards are the Winter North Atlantic freeboards prescribed in Rule LXV.

The Tropical Timber freeboard is to be obtained by deducting from the Summer Timber freeboard one-quarter of an inch per foot of the moulded Summer Timber draught.

PART VI.—LOAD LINES FOR TANKERS

Definition

Tanker.—The term "tanker" includes all steamers specially constructed for the carriage of liquid cargoes in bulk.

Rule XCII.—*Marks on the Ship's Sides*

The marks on the ship's sides are to be as provided in the figure in Rule IV.

Supplementary Conditions of Assignment for Deeper Loading

Rule XCIII.—*Construction of Ship*

The structure of the ship is to be of sufficient strength for the increased draught corresponding to the freeboard assigned.

Rule XCIV.—*Forecastle*

The ship is to have a forecastle of which the length is not less than 7 per cent of the length of the ship and the height is not less than the standard height.

Rule XCV.—*Machinery Casings*

The openings in machinery casings on the freeboard deck are to be fitted with steel doors. The casings are to be protected by an enclosed poop or bridge of at least standard height, or by a deck house of equal height and of equivalent strength. The bulkheads at the ends of these structures are to be of the scantlings required for bridge front bulkheads. All entrances to the structures from the freeboard deck are to be fitted with effective closing appliances and the sills are to be at least 18 inches above the deck. Exposed machinery casings on the superstructure deck are to be of substantial construction, and all openings in them are to be fitted with steel closing appliances permanently attached to the casings and capable of being closed and secured from both sides; the sills of such openings are to be at least 15 inches above the deck. Fiddley openings are to be as high above the superstructure deck as is reasonable and practicable and are to have strong steel covers permanently attached in their proper positions.

Rule XCVI.—*Gangway*

An efficiently constructed permanent gangway of sufficient strength for its exposed position is to be fitted fore and aft at the level of the superstructure deck between the poop and midship bridge, and when crew are berthed forward, from the bridge to the forecastle, or other equivalent means of access may be provided to carry out the purpose of the gangway, such as passages below deck.

Rule XCVII.—*Protection of Crew, Access to Machinery Space, Etc.*

Safe and satisfactory access from the gangway level to the quarters of the crew, the machinery space and all other parts used in the necessary work of the ship, is to be available at all times. This rule does not apply to pump rooms entered from the freeboard deck, when fitted with Class 1 closing appliances.

Rule XCVIII.—*Hatchways*

All hatchways on the freeboard deck and on the deck of expansion trunks are to be closed watertight by efficient steel covers.

Rule XCIX.—*Ventilators*

Ventilators to spaces below the freeboard deck are to be of ample strength or are to be protected by superstructures or equally efficient means.

Rule C.—*Freeing Arrangements*

Ships with bulwarks are to have open rails fitted for at least half the length of the exposed portion of the weather deck or other effective freeing arrangements. The upper edge of the sheer-strake is to be kept as low as practicable, and preferably not higher than the upper edge of the gunwale bar.

Where superstructures are connected by trunks, open rails are to be fitted for the whole length of the weather portions of the freeboard deck.

Rule CI.—*Plans*

Plans showing proposed fittings and arrangements are to be submitted to the Assigning Authority for approval.

Freeboards

Rule CII.—*Computation of Freeboard*

When the Assigning Authority is satisfied that the foregoing requirements are fulfilled, the Summer freeboard may be computed from the Table for Tankers; all corrections except those for flush-deck steamers, detached superstructures, excess sheer, and winter voyages across the North Atlantic are to be made in accordance with Part III of the Rules.

Rule CIII.—*Deduction for Detached Superstructures*

When the total effective length of superstructure is less than 1·0 L, the deduction is a percentage of that for a superstructure of length 1·0 L, and is obtained from the following table:—

TOTAL Effective Length of Superstructures

—	0	·1 L	·2 L	·3 L	·4 L	·5 L	·6 L	·7 L	·8 L	·9 L	1·0 L
	%	%	%	%	%	%	%	%	%	%	%
All types.	0	7	14	21	31	41	52	63	75·3	87·7	100

Rule CIV.—*Deduction for Excess Sheer*

Where the sheer is greater than the standard, the correction for excess sheer (*see* Rule LVII of Part III, Load Lines for Steamers) is deducted from the freeboard for all tankers. Rule LIX of Part III does not apply except that the maximum deduction for excess sheer is $1\frac{1}{2}$ inches at 100 feet and increases at the rate of $1\frac{1}{2}$ inches for each additional 100 feet in the length of the ship.

Rule CV.—*Winter North Atlantic Freeboard*

The minimum freeboard for voyages across the North Atlantic, north of latitude 36° N., during the winter months, is the Winter Freeboard plus an addition at a rate of 1 inch per 100 feet in length.

Rule CVI.—*Freeboard Table for Tankers*

L in Feet.	Freeboard in Inches.	L in Feet.	Freeboard in Inches.
190	21·5	400	62·5
200	23·1	410	64·9
210	24·7	420	67·4
220	26·3	430	69·9
230	28·0	440	72·5
240	29·7	450	75·1
250	31·5	460	77·7
260	33·3	470	80·2
270	35·2	480	82·7
280	37·1	490	85·1
290	39·1	500	87·5
300	41·1	510	89·8
310	43·1	520	92·1
320	45·1	530	94·3
330	47·1	540	96·5
340	49·2	550	98·6
350	51·3	560	100·7
360	53·5	570	102·7
370	55·7	580	104·6
380	57·9	590	106·5
390	60·2	600	108·4

Ships above 600 feet are to be dealt with by the Administration.

ANNEX II.

Boundaries of the Zones and Seasonal Areas.

Zones.

The southern boundary of the northern "Winter Seasonal" zone is a line drawn from the east coast of North America along the parallel of lat. 36° N. to Tarifa in Spain; from the east coast of Korea along the parallel of lat. 35° N. to the west coast of Honshiu, Japan; from the east coast

of Honshiu along the parallel of lat. 35° N. to long. 150° W., and thence along a rhumb line to the west coast of Vancouver Island at lat. 50° N., Fusan (Korea) and Yokohama to be considered as being on the boundary line of the northern "Winter Seasonal" zone and the "Summer" zone.

The northern boundary of the "Tropical" zone is a line drawn from the east coast of South America at lat. 10° N. along the parallel of lat. 10° N. to long. 20° W., thence north to lat. 20° N. and thence along the parallel of lat. 20° N. to the west coast of Africa; a line from the east coast of Africa along the parallel of lat. 8° N. to the west coast of the Malay Peninsula, following thence the coast of Malay and Siam to the east coast of Cochin, China, at lat. 10° N., thence along the parallel of lat. 10° N. to long. 145° E., thence north to lat. 13° N. and thence along the parallel of lat. 13° N. to the west coast of Central America, Saigon to be considered as being on the boundary line of the "Tropical" zone and the "Seasonal Tropical" area (4).

The southern boundary of the "Tropical" zone is a line drawn from the east coast of South America along the Tropic of Capricorn to the west coast of Africa; from the east coast of Africa along the parallel of lat. 20° S. to the west coast of Madagascar, thence along the west and north coast of Madagascar to long. 50° E., thence north to lat. 10° S., thence along the parallel of lat. 10° S. to long. 110° E., thence along a rhumb line to Port Darwin, Australia, thence eastwards along the coast of Australia and Wessel Island to Cape Wessel, thence along the parallel of lat. 11° S. to the west side of Cape York, from the east side of Cape York at lat. 11° S. along the parallel of lat. 11° S. to long. 150° W., thence along a rhumb line to the point lat. 26° S., long. 75° W., and thence along a rhumb line to the west coast of South America at lat. 30° S., Coquimbo, Rio de Janeiro and Port Darwin to be considered as being on the boundary line of the "Tropical" and "Summer" zones.

The following regions are to be included in the "Tropical" zone:—

(1) *The Suez Canal, the Red Sea and the Gulf of Aden,* from Port Said to the meridian of 45° E., Aden and Berbera to be considered as being on the boundary line of the "Tropical" zone and the "Seasonal Tropical" area 2 (b).

(2) *The Persian Gulf to the meridian of* 59° *E.*

The northern boundary of the southern "Winter Seasonal" zone is a line drawn from the east coast of South America along the parallel of lat. 40° S. to long. 56° W., thence along a rhumb line to the point lat. 34° S., long. 50° W., thence along the parallel of lat. 34° S. to the west

coast of South Africa; from the east coast of South Africa at lat. 30° S. along a rhumb line to the west coast of Australia at lat. 35° S., thence along the south coast of Australia to Cape Arid, thence along a rhumb line to Cape Grim, Tasmania, thence along the north coast of Tasmania to Eddystone Point, thence along a rhumb line to the west coast of South Island, New Zealand, at long. 170° E., thence along the west, south and east coasts of South Island to Cape Saunders, thence along a rhumb line to the point lat. 33° S. long. 170° W.; and thence along the parallel of lat. 33° S. to the west coast of South America, Valparaiso, Cape Town and Durban to be considered as being on the boundary line of the southern "Seasonal Winter" and "Summer" zones.

Summer Zones.

The remaining areas constitute the "Summer" Zones.

Seasonal Areas.

The following areas are Seasonal Tropical Areas:—

(1) *In the North Atlantic Ocean.*

An area bounded on the north by a line from Cape Catoche in Yucatan to Cape San Antonio in Cuba, by the South Cuban Coast to lat. 20° N. and by the parallel of lat. 20° N. to the point lat. 20° N. Long. 20° W.; on the west by the coast of Central America; on the south by the north coast of South America and by parallel of lat. 10° N., and on the east by the meridian of 20° W.

Tropical: 1st November to 15th July.
Summer; 16th July to 31st October.

(2) *Arabian Sea.*

(a) *North of lat.* 24° *N.*

Karachi is to be considered as being on the boundary line of this area and the seasonal Tropical area (b) below.

Tropical: 1st August to 20th May.
Summer: 21st May to 31st July.

(b) *South of lat.* 24° *N.*

Tropical: 1st December to 20th May, and 16th September to 15th October.
Summer: 21st May to 15th September and 16th October to 30th November.

(3) *Bay of Bengal.*

Tropical: 16th December to 15th April.
Summer: 16th April to 15th December.

(4) *In the China Sea.*

An area bounded on the west and north by the coast of Indo-China and China to Hong Kong, on the east by a rhumb line to the port of Sual (Luzon Island), and by the west coast of the Islands of Luzon, Samar and Leyte to the parallel of 10° N., and on the south by the parallel of lat. 10° N.

Hong Kong and Sual to be considered as being on the boundary of the "Seasonal Tropical" and "Summer" zones.

Tropical: 21st January to 30th April.
Summer: 1st May to 20th January.

(5) *In the North Pacific Ocean.*

(*a*) An area bounded on the north by the parallel of lat. 25° N., on the west by the meridian of 160° E., on the south by the parallel of lat. 13° N., and on the east by the meridian of 130° W.

Tropical: 1st April to 31st October.
Summer: 1st November to 31st March.

(*b*) An area bounded on the north and east by the coast of California, Mexico and Central America, on the west by the meridian of 120° W. and by a rhumb line from the point lat. 30° N., long. 120° W., to the point lat. 13° N., long 105° W., and on the south by the parallel of lat. 13° N.

Tropical: 1st March to 30th June and 1st to 30th November.
Summer: 1st July to 31st October and 1st December to 28th/29th February.

(6) *In the South Pacific Ocean.*

(*a*) An area bounded on the north by the parallel of lat. 11° S., on the west by the east coast of Australia, on the south by the parallel of lat. 20° S., and on the east by the meridian of 175° E., together with the Gulf of Carpentaria south of lat. 11° S.

Tropical: 1st April to 30th November.
Summer: 1st December to 31st March.

(*b*) An area bounded on the west by the meridian of 150° W., on the south by the parallel of lat. 20° S., and on the north and east by the rhumb line forming the southern boundary of the "Tropical" zone.

Tropical from 1st March to 30th November.
Summer: from 1st December to 28th/29th February.

The following are "Seasonal Winter" areas:—

Northern "Seasonal Winter" Zone (between North America and Europe).

(*a*) In the area within and to the Northwards of the following line:—

A line drawn south from the Coast of Greenland at long. 50° W. to lat. 45° N., thence along the parallel of lat. 45° N. to the meridian of 15° W., thence north to lat. 60° N., thence along the parallel of lat 60° N. to the west coast of Norway, Bergen to be considered as being on the boundary line of this area and area (*b*) below.

Winter from 16th October to 15th April.
Summer from 16th April to 15th October.

(*b*) An area outside area (*a*) above and north of the parallel of lat. 36° N.

Winter from 1st November to 31st March.
Summer from 1st April to 31st October.

Baltic (bounded by the parallel of latitude of the Skaw).

Winter from 1st November to 31st March.
Summer from 1st April to 31st October.

Mediterranean and Black Sea.

Winter from 16th December to 15th March.
Summer from 16th March to 15th December.

Northern "Seasonal Winter" Zone (between Asia and North America, except Sea of Japan, South of 50° N.).

Winter from 16th October to 15th April.
Summer from 16th April to 15th October.

Sea of Japan between the parallels of lat. 35° *N. and* 50° *N.*

Winter from 1st December to 28th/29th February.
Summer from 1st March to 30th November.

Southern "Seasonal Winter" Zone.

Winter from 16th April to 15th October.
Summer from 16th October to 15th April.

ANNEX III

International Load Line Certificate

ISSUED under the authority of the Government of.....
.....under the provisions of the International Load Line Convention, 1930.

Distinctive Number
or Letters.....

Ship.....
Port of Registry.....
Gross Tonnage.....

	Freeboard from deck line	*Load Line*
Tropical	(*a*)	above (*b*).
Summer	(*b*)	Upper edge of line through centre of disc.
Winter	(*c*)	below (*b*).
Winter in North Atlantic.....	(*d*)	below (*b*).

Allowance for fresh water for all freeboards.....

The upper edge of the deck line from which these freeboards are measured is .....inches above the top of the.....deck at side.

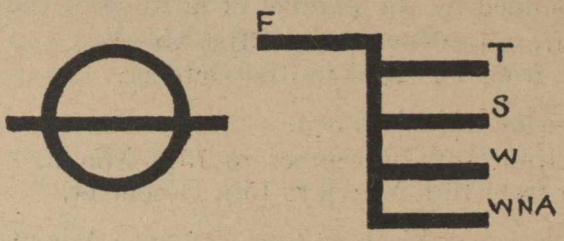

THIS IS TO CERTIFY that this ship has been surveyed and the freeboards and load lines shown above have been assigned in accordance with the Convention.

This certificate remains in force until.....*

Issued at..... on the.....

day of.....

Here follows the signature or seal and the description of the authority issuing the certificate.

The provisions of the Convention being fully complied with by this ship, this certificate is renewed till.....

.....

Place ..... Date .....

Signature or Seal and description of authority.

* See back.

NOTE.—Where sea-going steamers navigate a river or inland water, deeper loading is permitted corresponding to the weight of fuel, &c., required for consumption between the point of departure and the open sea.

The provisions of the Convention being fully complied with by this ship, this certificate is renewed till.....
.....

Place ..... Date .....

Signature or Seal and description of authority.

The provisions of the Convention being fully complied with by this ship, this certificate is renewed till.....
.....

Place ..... Date .....

Signature or Seal and description of authority.

ANNEX IV

Titles of Load Line Laws and Rules regarded as Equivalent to the British Board of Trade Rules, 1906.

Australia.
Part IV of the Navigation Act, 1912-1920, and Navigation (Load Line) Regulations of the 17th December, 1924.

Belgium.
Loi sur la sécurité des navires (7 decembre 1920).

Chile.
Reglamento para el trazado del disco marcas y linea oficial de carguio de las naves mercantes (Decree No. 1896 of the 12th November, 1919).

Denmark.
Merchant Shipping (Inspection of Ships) Act of the 29th March, 1920, with later amendments.
Rules and Tables of Freeboard for Ships, dated the 30th September, 1909, as amended by Notification of the 25th July, 1918.

France.
Loi du 17 avril 1907, arrêté du 5 septembre 1908. Décret du 21 septembre 1908. Autre décret du 21 septembre 1908 modifié par le décret du 1 septembre 1925. Décret du 12 mai 1927. Décret du 17 janvier 1928.

Germany.
Vorschriften der See-Berufsgenossenschaft über den Freibord für Dampfer und Segelschiffe, Ausgabe 1908.

Hong Kong.
Merchant Shipping Consolidation Ordinance (No. 10 of 1899), as amended by Ordinances Nos. 31 of 1901, 2 of 1903, 5 of 1905, 16 of 1906, 9 of 1909, and 6 of 1910.

Iceland.
Law No. 58 of the 14th June, 1929, Sections 25-26.

India.
Indian Merchant Shipping Act, 1923.

Italy.
Regole e tavole per assignazione del "Bordo Libero" approved by decree dated the 1st February, 1929—VII of the Italian Minister for Communications.
Prior to 1929—British Board of Trade Rules, 1906.

Japan.
Ship Load Line Law [Law No. 2 of the 10th year of Taisho (1921)] and the Rules and Regulations relating thereto.

Netherlands.
Decree of the 22nd September, 1909 (Official Journal No. 315).

Netherlands Indies.
Netherlands Decree of the 22nd September, 1909 (Official Journal No. 315).

New Zealand.
British Board of Trade Rules, 1906.

Norway.
Norwegian Freeboard Rules and Tables of 1909.

Portugal.
Decree No. 11,210 of the 18th July, 1925, and Regulations and Instructions relating thereto.

Spain.
Reglamento para el Trazado del Disco y Marcas de Maxima Carga de los buques marchantes, 1914.

Straits Settlements.
British Board of Trade Rules, 1906.

Sweden.
Rules and Tables of Freeboard approved by decree of the 21st May, 1910.

United Kingdom.
Board of Trade Rules, 1906.

United States of America.
British Board of Trade Rules, 1906.

Union of Soviet Socialist Republics.
Rules and Regulations relating to the Load Lines of sea-going merchant vessels, published by Register of the Union of Soviet Socialist Republics, 1928.

FINAL ACT OF THE INTERNATIONAL LOAD LINE CONFERENCE, 1930

The Governments of Germany, the Commonwealth of Australia, Belgium, Canada, Chile, Cuba, Denmark, the Free City of Danzig, Spain, the Irish Free State, the United States of America, Finland, France, the United Kingdom of Great Britain and Northern Ireland, Greece, India, Iceland, Italy, Japan, Latvia, Mexico, Norway, New Zealand, Paraguay, the Netherlands, Peru, Poland, Portugal, Sweden and the Union of Soviet Socialist Republics;

Desiring to promote safety of life and property at sea by establishing in common agreement uniform principles and rules with regard to the limits to which ships on international voyages may be loaded;

Having decided to participate in an international conference which, upon the invitation of the Government of the United Kingdom of Great Britain and Northern Ireland, was held in London;

Appointed the following delegations:—

GERMANY

Delegates

Mr. Gustav KOENIGS.. ..	Ministerialdirigent in the Reichsverkehrsministerium, Geheimer Regierungsrat, Berlin.
Mr. Arthur WERNER.. ..	Ministerialrat in the Reichsverkehrsministerium, Geheimer Justizrat, Berlin.
Professor Walter LAAS.. ..	Director of the "Germanischer Lloyd" Classification Society, Berlin.
Mr. Karl STURM..	Verwaltungsdirektor of the See - Berufsgenossenschaft, Hamburg.

Experts

Captain A. N. ELINGIUS..	Inspector of the "Hamburg-Südamerika-Line," Hamburg.
Mr. Wilhelm HEBERLING..	Diplom-Ingenieur, "Germanischer Lloyd" Classification Society, Berlin.
Captain Ernst KNUTZEN ..	Inspector of the "Atlantic Tank-Rhederei for Verband deutscher Kapitäne und Schiffsoffiziere," Hamburg.

Mr. Franz KÖHLER	Gesamtverband, Abteilung Seeleute, Berlin.
Captain Ludwig SCHMIDT.	Inspector of the "Hansa-Line," Bremen.
Captain Ludwig SCHUBART.	Oberregierungsrat in the "Deutsche Seewarte," Hamburg.
Captain Conrad SOERENSEN.	Inspector of the "Dampfschiffahrtsgesellschaft 1869," Flensburg.
Mr. Johann WINTER. . . .	Chief Engineer, First Ship Surveyor, See-Berufsgenossenschaft, Hamburg.

THE COMMONWEALTH OF AUSTRALIA

Delegates

Captain Henry Priaulx CAYLEY.	Royal Australian Navy, Commonwealth Naval Representative in London.
Mr. Vincent Cyril DUFFY.	Australia House.

Secretary

Paymaster Lieut.-Com. A. FREYER.	Royal Australian Navy.

BELGIUM

Delegate

Mr. Raoul F. GRIMARD . .	Naval Engineer, Technical Adviser to the Central Naval Department.

CANADA

Delegate

Mr. Alexander JOHNSTON. .	Deputy Minister of Marine.

Experts

Mr. C. F. M. DUGUID. . . .	Chief Naval Architect.
Captain J. GILLIES.	Canadian Pacific Steamships, Ltd.
Mr. Frank McDONNELL. . .	Chairman, Board of Steamship Inspection.
Captain H. E. NEDDEN. . . .	Canadian National Steamship Co.
Captain R. A. GOUDEY. . . .	Canadian National Steamship Co.

Secretary.

Miss Edna STOWE

CHILE

Delegate.

Lieut.-Commander Constructor Oscar BUNSTER	Member of the Chilian Naval Commission in London.

CUBA

Delegate.

Mr. Guillermo PATTERSON	Cuban Minister in London.

DENMARK

Delegates.

Mr. Emil KROGH	Assistant Secretary in the Ministry of Shipping and Fisheries.
Mr. Aage H. LARSEN	Naval Architect and Engineer-in-Chief to the Ministry of Shipping and Fisheries.
Mr. J. A. KÖRBING	Director of the "Forenede Dampskibsselskab," Copenhagen.
Captain H. P. HAGELBERG	Chairman of the Association of Danish Shipmasters.
Mr. Erik JACOBSEN	Trade Union Manager.

Experts.

Mr. P. VILLADSEN	Principal in the Ministry of Shipping and Fisheries.
Mr. Peder FISCHER	Naval Architect.

THE FREE CITY OF DANZIG

Delegates.

Mr. Alphonse POKLEWSKI-KOZIELL	Commercial Counsellor, Polish Legation, London.
Mr. Waldemar SIEG	Commercial Counsellor.

SPAIN

Delegate

Mr. Octaviano MARTINEZ-BARCA	Engineer, Spanish Navy.

IRISH FREE STATE

Delegates.

Mr. J. W. DULANTY	Commissioner for Trade for the Irish Free State in Great Britain.
Mr. T. J. HEGARTY	Ship Surveyor, Transport and Marine Branch, Department of Industry and Commerce.

United States of America

Delegates

Mr. Herbert B. Walker....	President of the American Steamship Owners' Association.
Mr. David Arnott..	Chief Surveyor, American Bureau of Shipping.
Mr. Laurens Prior	Bureau of Navigation, Department of Commerce.
Mr. Howard C. Towle.. ..	National Council of American Shipbuilders.
Mr. Samuel D. McComb..	Marine Office of America.
Captain Albert F. Pillsbury	Pillsbury and Curtis, San Francisco.
Mr. Robert F. Hand..	Vice-President Standard Shipping Co., New York.
Mr. James Kennedy	General Manager, Marine Department, Gulf Refining Co., New York.
Mr. H. W. Warley..	Vice-President Ore Steamship Corporation, New York.
Rear-Admiral John G. Tawresey..	C.C. United States Navy, Retired. United States Shipping Board.

Technical Advisers.

Mr. David W. Dickie.. ..	Engineer and Naval Architect, Attorney-at-Law, San Francisco.
Captain P. C. Grening.. .	Director for Europe, United States Shipping Board Merchant Fleet Corporation.
Mr. G. A. Smith.	American Bureau of Shipping.

Finland.

Delegates.

Mr. A. H. Saastamoinen. .	Finnish Minister in London.
Commander Birger Brandt	Finnish Shipmasters' Association.

Assistant Delegate.

Mr. E. Wälikangas..	Finnish Legation, London.

FRANCE.

Delegates.

Mr. André Maurice HAARBLEICHER	Naval Construction Corps, Director of the Departments of the Mercantile Fleet and of Naval Material at the Ministry of the Mercantile Marine.
Mr. René Hippolyte Joseph LINDEMANN	Assistant Director of the Department of Marine Labour and of the Accountants' Department at the Ministry of the Mercantile Marine.
Mr. Jean Henri Theophile MARIE	Naval Construction Corps, Assistant to the Director of the Departments of the Mercantile Fleet and of Naval Material at the Ministry of the Mercantile Marine.
Mr. A. H. A de BERLHE	Deputy Manager of the Bureau Veritas.

Assistant to the Delegates.

Mr. J. VOLMAT	Chief Hydrographer, 2nd Class, representing the French Admiralty.

Experts.

Mr. Jacques de BERLHE	Engineer to the Bureau Veritas.
Mr. BRILLIÉ	Chief Consulting Engineer of the Compagnie Générale Transatlantique.
Mr. M. A. R. de CATALANO	Chief Superintendent of the Compagnie Générale Transatlantique.
Mr. J. R. L. DUBOIS	Chief Marine Superintendent of the Compagnie des Messageries Maritimes.
Mr. G. FALCOZ	Chief Engineer of the Compagnie des Messageries Maritimes.

Mr. Ch. le Pelletier	Chief Engineer of the Compagnie des Chargeurs Réunis.
Mr. A. Nizery	Manager of the Compagnie des Chargeurs Réunis.
Mr. Patry	Chief Engineer of the Bureau Veritas.
Mr. J. Perrachon	Assistant Manager of the Compagnie Auxiliaire de Navigation.
Mr. Jules M. A. T. Pinczon	Chief Consulting Engineer of the Chantiers de Saint-Nazaire.
Mr. R. Rossigneux	Chief of the Technical Department of the Comité Central des Armateurs de France.

Secretary.

Captain C. F. J. Dilly	Inspector of Navigation, Ministry of Mercantile Marine.

United Kingdom of Great Britain and Northern Ireland

Delegates

Sir Henry F. Oliver	Admiral of the Fleet, Royal Navy.
Captain F. W. Bate	Professional Officer, Mercantile Marine Department, Board of Trade.
Mr. A. J. Daniel	Principal Ship Surveyor, Board of Trade.
Captain J. T. Edwards	Master Mariner, Retired.
Sir Ernest W. Glover	Chamber of Shipping of the United Kingdom.
Sir Norman Hill	Chairman, Merchant Shipping Advisory Committee, Board of Trade.
Sir Charles Hipwood	Board of Trade.
Mr. J. Foster King	Chief Surveyor to the British Corporation Register of Shipping and Aircraft.
Dr. J. Montgomerie	Chief Ship Surveyor to Lloyd's Register of Shipping.
Sir Charles J. O. Sanders	Chairman, Load Line Committee, 1927-1929.

Mr. William Robert SPENCE.	General Secretary, National Union of Seamen.
Captain A. SPENCER.	Master Mariner, Retired.

Secretary

Mr. A. E. LEE.	Board of Trade.

Assistant Secretaries

Mr. G. C. AGER.	Board of Trade.
Mr. W. GRAHAM.	Board of Trade.
Mr. H. C. MILLER.	Board of Trade.
Mr. J. T. MUNDEN.	Board of Trade.
Mr. W. E. STIMPSON.	Board of Trade.

GREECE

Delegate

Mr. Nicolas G. LELY.	Consul-General for Greece in London.

Expert Advisers

Commander Basil SCARPETIS	Commander Harbour Master, Head of the Shipping Services at the Greek Consulate-General, London.
Acting Commander Evanghelos ROUSSOS.	Assistant of the Naval and Air Attaché of Greece, London.

INDIA

Delegates

Sir Geoffrey L. CORBETT. . .	Late Secretary to the Government of India, Commerce Department.
Mr. Nowrojee Dadabhoy ALLBLESS.	Chairman of Scindia Steamships (London), Ltd.
Captain Kavas OOKERJEE. .	Marine Superintendent, Scindia Steam Navigation Co., Ltd., Bombay.
Engineer-Commander John Sutherland PAGE.	Royal Indian Marine. Late Principal Engineer and Ship Surveyor, Government of Bengal.

Iceland

Delegates

Mr. Emil Krogh	Assistant Secretary in the Danish Ministry of Shipping and Fisheries.
Mr. Aage H. Larsen	Naval Architect and Engineer-in-Chief to the Danish Ministry of Shipping and Fisheries.
Mr. J. A. Körbing	Director of the "Forenede Dampskibsselskab," Copenhagen.
Captain H. P. Hagelberg	Chairman of the Association of Danish Shipmasters.
Mr. Erik Jacobsen	Trade Union Manager, Denmark.

Experts

Mr. P. Villadsen	Principal in the Danish Ministry of Shipping and Fisheries.
Mr. Peder Fischer	Naval Architect.

Italy

Delegates

General Giulio Ingianni	General Director of the Mercantile Marine.
Admiral Giuseppe Cantù	Admiral of Division, Technical Inspector of the Mercantile Marine.
Professor Torquato Giannini	Counsellor for Emigration in the Italian Foreign Office.

Assistant Delegate

Dr. Gaetano Lampertico	Vice-Counsellor for Emigration in the Italian Foreign Office.

Experts

Mr. Carlo Doerfles	Naval Architect, Head of the Technical Office of the Registro Italiano Navale ed Aeronautico, Trieste.
Mr. Aroldo Palanca	Representing the Italian Ship-owners' Federation.

Mr. Gino Soldà.	Naval Architect, Inspector of the Registro Italiano Navale ed Aeronautico.
Mr. Giuseppe Gasparini. .	Naval Architect, representing the Italian General Confederation of Industry.
Captain Luigi Zino.	Representing the Italian Cargo Shipowners' Federation, Genoa.
Captain Arturo Romano. .	Representing the Italian Confederation of Captains, Officers and Seamen.

Japan

Delegates

Mr. Shoichi Nakayama. . .	First-Class Secretary of Embassy.
Mr. Sukefumi Iwai.	Expert in the Local Administration Office of Communications.

Experts

Mr. Kumaichi Showno. . .	Expert in the Local Administration Office of Communications.
Mr. Takeji Kobayashi. . .	Secretary in the Department of Communications.
Mr. Motoki Matsumura. .	Attaché.
Captain Nagayoshi Hori. .	Temporary Staff in the Department of Comunications.

Latvia

Delegates

Mr. Arturs Ozols.	Director of the Marine Department.
Captain Andrejs Lonfelds.	Latvian Shipowners' Society.

Mexico

Delegate

Mr. Gustavo Luders de Negri.	Consul-General for Mexico in London.

Secretary

Mr. Macedonio Garza. . .	Vice-Consul for Mexico, London.

NORWAY

Delegates

Mr. Erling BRYN	Director of the Department of Shipping, Ministry of Commerce and Navigation.
Mr. Johan SCHÖNHEYDER	Surveyor-in-Chief in the Ministry of Commerce and Navigation.
Dr. J. BRUHN	Director of the Norwegian Veritas.
Mr. J. Hysing OLSEN	Shipowner.
Mr. Eivind TONNESEN	Managing Director of the Norwegian Shipmasters' Association.
Mr. A. BIRKELAND	President of the Norwegian Sailors' and Firemen's Union.

Adviser

Mr. E. WETTERGREEN	Chief of Division in the Ministry of Commerce and Navigation.

NEW ZEALAND

Delegates

Sir Thomas Mason WILFORD.	High Commissioner for New Zealand in London.
Sir Charles HOLDSWORTH.	Managing Director of the Union Steamship Company of New Zealand, Ltd.

PARAGUAY

Delegate

Dr. Horacio CARISIMO	Chargé d'Affaires in London.

NETHERLANDS

Delegates

Vice-Admiral (retired) C. FOCK	Inspector-General of Navigation, Chairman of the Freeboard Assigning Commission.
Mr. A. van DRIEL	Naval Architect, Adviser on Naval Architecture to the Shipping Inspection Service, Member and Secretary of the Freeboard Assigning Commission.

Mr. J. Brautigam	Chairman of the Netherlands Union of Transport Workers, Member of the Second Chamber of the States General.
Mr. J. W. Langeler	Inspector of Shipping, Dutch East Indies.
Mr. J. Rypperda Wierdsma	Chairman of the Holland-America Line.
Captain G. L. Heeris	Secretary of the Netherlands Shipowners' Association.

Experts

Mr. H. Keyser	Assistant Director of the Royal Netherlands Meteorological Institute.
Professor N. Kal	Professor in Naval Architecture at the Technical University, Delft.
Mr. F. Reedeker	Master Mariner, retired.
Mr. G. de Ronde	Master Mariner, retired.
Mr. J. Carpentier-Alting	Naval Architect.

Secretary

Jonkheer O. Reuchlin	Attaché to the Netherlands Legation, London.

Peru

Delegate

Captain Manuel D. Faura.	Naval Attaché in London.

Poland

Delegates

Mr. Alphonse Poklewski-Koziell	Commercial Counsellor, Polish Embassy, London.
Mr. Boguslaw Bagniewski.	Counsellor, Ministry of Industry and Trade, Warsaw.

Portugal

Delegates

Mr. Thomaz Ribeiro de Mello	Minister Plenipotentiary. Head of the Economic Questions of the Portuguese Ministry of Foreign Affairs.
Captain Carlos Theodoro da Costa	Naval Architect.

SWEDEN

Delegates

Baron Erik Kule PALMSTIERNA	Swedish Minister in London.
Mr. Per Axel LINDBLAD	Assistant Under-Secretary in the Board of Trade.
Captain Erik Axel Fredrik EGGERT	Maritime Expert to the Social Board.

Experts and Assistant Delegates

Mr. G. MacE. BÖÖS	First Amanuensis in the Board of Trade.
Mr. A. W. PALMQVIST	Controller of Tonnage, Gothenburg District.
Captain O. A. NORDBORG	Member of the First Chamber of Parliament, Director of the Swedish Shipowners' Association.
Captain N. P. LARSSON	President of the Swedish Society of Masters and Officers of the Mercantile Marine.
Mr. N. OLSSON	President of the Swedish Seamen's Union.

UNION OF SOCIALIST SOVIET REPUBLICS

Delegate.

Mr. Dimitri BOGOMOLOFF	Counsellor of the Soviet Embassy in London.

Experts

Mr. P. MATVEEFF	Naval Engineer.
Mr. A. A. KAUKUL	Anglo-Soviet Shipping Co.

The Governments of Austria, Estonia, Hungary and Turkey appointed observers as follows:—

Austria

Mr. K. ZEILEISSEN	Secretary to the Austrian Legation, London.

Estonia.

Mr. R. A. MOLLERSON	Counsellor of Estonian Legation, London.

Hungary.

Baron Ivan RUBIDO-ZICHY. Hungarian Minister in London.

Turkey.

Mehmet Ali SEVKI Pasha.. Counsellor to the Turkish Embassy in London.

The League of Nations having been invited to send representatives to the Conference to act as observers, appointed the following delegation for this purpose:—

Mr. Robert HAAS.. .. .. .. Secretary-General of the Advisory and Technical Committee for Communications and Transit.

Mr. J. M. F. ROMEIN.. .. Secretary of the Permanent Committee for Ports and Maritime Navigation.

Who accordingly assembled in London.

Admiral of the Fleet Sir Henry F. Oliver was appointed President of the Conference, and Mr. A. E. Lee, Secretary-General.

For the purposes of its work the Conference set up the following Committees, of which the under-mentioned were Presidents:—

Administration Committee: Mr. Koenigs.
Main Technical Committee: Sir Charles Sanders.
Tankers Committee: Mr. Kennedy.
Timber Ships Committee: Mr. Emil Krogh.
Special Types of Ship Committee: Vice-Admiral Fock.
Zones Committee: General Ingianni.
Drafting Committee: Mr. Haarbleicher.
Credentials Committee: Mr. Nakayama.

In the course of a series of meetings between the 20th May, 1930, and the 5th July, 1930, a Load Line Convention, dated the 5th July, 1930, was drawn up.

I.

The Conference takes note of the following declarations, made by the undermentioned delegation:—

The Plenipotentiaries of the United States of America formally declare that the signing of the International Load Line Convention by them, on the part of the United States of America, on this date, is not to be construed to mean

that the Government of the United States of America recognizes a régime or entity which signs or accedes to the Convention as the Government of a country when that régime or entity is not recognized by the Government of the United States of America as the Government of that country.

The Plenipotentiaries of the United States of America further declare that the participation of the United States of America in the International Load Line Convention signed on this date does not involve any contractual obligation on the part of the United States of America to a country, represented by a régime or entity which the Government of the United States of America does not recognize as the Government of that country, until such country has a Government recognized by the Government of the United States of America.

II.

The Conference also adopts the following recommendations:—

Ships of less than 150 *tons gross Engaged on International Voyages.*

The Conference recommends that such regulations as may be made by any of the Contracting Governments relating to ships of less than 150 tons gross engaged on international voyages should, so far as practicable and reasonable, be framed in accordance with the principles and rules laid down in this Convention, and should whenever possible be made after consultation and agreement with the Governments of the other countries concerned in such international voyages.

Strength

As under the Rules attached to this Convention, ships which comply with the highest standard laid down in the rules of a classification society recognized by the Administration are regarded as having sufficient strength for the minimum freeboards allowed under the rules, the Conference recommends that each Administration should request the Society or Societies which it has recognized to confer from time to time with the Societies recognized by other Administrations, with a view to securing as much uniformity as possible in the application of the standards of strength on which freeboard is based.

Annual Surveys.

The Conference recommends that, if possible, each Administration should make arrangements for the periodical inspections referred to in paragraph (3) (*c*) of Article 14 to be held at intervals of approximately twelve months so far as concerns the maintenance of the fittings and appliances referred to in Condition B of paragraph 3 of that Article (*i.e.*, the fittings and appliances for the (i) protection of openings, (ii) guard rails, (iii) freeing ports and (iv) means of access to crews' quarters).

Information regarding Damage to Tankers.

The Conference recommends that the Governments of the countries to which tankers belong shall keep records of all structural and deck damage to these ships caused by stress of weather, so that information with regard to these matters may be available.

In faith whereof the undersigned have affixed their signatures to the present Act.

Done in London this fifth day of July, 1930, in a single copy which shall be deposited in the archives of the Government of the United Kingdom of Great Britain and Northern Ireland, which shall transmit certified true copies thereof to all signatory Governments.

(L.S.) GUSTAV KOENIGS.
WALTER LAAS.
KARL STURM.
WILHELM HEBERLING.
H. P. CAYLEY.
V. C. DUFFY.
R. GRIMARD.
A. JOHNSTON.
CHAS. DUGUID.
FRANK McDONNELL.
EDNA STOWE.
OSCAR BUNSTER.
GUILLERMO PATTERSON.
EMIL KROGH.
AAGE H. LARSEN.
H. P. HAGELBERG.
P. VILLADSEN.
P. FISCHER.
OCTAVIANO M. BARCA.
SEAN DULCHAONTIGH.
T. J. HEGARTY.
HERBERT B. WALKER.
DAVID ARNOTT.
LAURENS PRIOR.

HOWARD C. TOWLE.
ALBERT F. PILLSBURY.
ROBERT F. HAND.
JAS. KENNEDY.
H. W. WARLEY.
JOHN G. TAWRESEY.
DAVID W. DICKIE.
PAUL C. GRENING.
GEORGE A. SMITH.
A. H. SAASTAMOINEN.
B. BRANDT.
JEAN MARIE.
A. DE BERLHE.
J. VOLMAT.
J. DE BERLHE.
R. ROSSIGNEUX.
CH. DILLY.
H. F. OLIVER.
F. W. BATE.
ALFRED J. DANIEL.
JOHN T. EDWARDS.
ERNEST W. GLOVER.
NORMAN HILL.
C. HIPWOOD.
J. FOSTER KING.
J. MONTGOMERIE.
CHARLES J. O. SANDERS.
W. R. SPENCE.
A. SPENCER.
A. E. LEE.
G. C. AGER.
W. GRAHAM.
H. C. MILLER.
J. T. MUNDEN.
W. E. STIMPSON.
E. PALMSTIERNA.
E. EGGERT.
GUNNAR BÖÖS.
N. G. LELY.
E. ROUSSOS.
G. L. CORBETT.
NOWROJEE DADABHOY ALLBLESS.
KAVAS OOKERJEE.
J. S. PAGE.
EMIL KROGH.
AAGE H. LARSEN.
H. P. HAGELBERG.
P. VILLADSEN.
P. FISCHER.
GIULIO INGIANNI.
GIUSEPPE CANTÙ.

ING. CARLO DOERFLES.
G. SOLDÀ.
G. GASPARINI.
S. NAKAYAMA.
S. IWAI.
K. SHOWNO.
T. KOBAYASHI.
M. MATSUMURA.
N. HORI.
A. OZOLS.
G. LUDERS DE NEGRI.
E. BRYN.
J. SCHÖNHEYDER.
THOMAS M. WILFORD.
C. HOLDSWORTH.
C. FOCK.
A. VAN DRIEL.
JOH, BRAUTIGAM.
LANGELER.
J. R. WIERDSMA.
M. D. FAURA.
A. POKLEWSKI-KOZIELL.
B. BAGNIEWSKI.
THOMAZ RIBEIRO DE MELLO.
CARLOS THEODORO DA COSTA.
D. BOGOMOLOFF.
P. MATVEEFF.
A. KAUKUL.
J. M. F. ROMEIN.
S. HORACIO CARÍSIMO.
T. C. GIANNINI.

Second Session, Seventeenth Parliament, 21-22 George V, 1931

THE HOUSE OF COMMONS OF CANADA.

BILL 97.

An Act to amend the Canada Shipping Act.

First reading, June 18, 1931.

Mr. ERNST.

OTTAWA
F. A. ACLAND
PRINTER TO THE KING'S MOST EXCELLENT MAJESTY
29966 1931

2nd Session, 17th Parliament, 21-22 George V, 1931

THE HOUSE OF COMMONS OF CANADA.

BILL 97.

An Act to amend the Canada Shipping Act.

R.S., c. 186.

HIS Majesty, by and with the advice and consent of the Senate and House of Commons of Canada, enacts as follows:—

1. The first paragraph *(a)* of section eighty-seven of the *Canada Shipping Act*, chapter one hundred and eighty-six of the Revised Statutes of Canada, 1927, is repealed, and the following is substituted therefor:—

Requirements for certificates of service as masters and mates.

"*(a)* served as a master or mate of a sea-going or coasting sailing vessel of over seventy-five tons, gross tonnage, before the first day of January, one thousand nine hundred and thirty-one, for a full period of twelve months within ten years immediately preceding the date of his application for a certificate of service;"

EXPLANATORY NOTES.

1. The section to be amended reads as follows:—

"**87.** Every British subject who

(a) served as a master or mate of a sea-going or coasting sailing vessel of over seventy-five tons, gross tonnage, before the first day of January, *one thousand nine hundred and twenty*, for a full period of twelve months within ten years immediately preceding the date of his application for a certificate of service;

(b) produces satisfactory evidence of his sobriety, experience, ability and general good conduct on board ship; and

(c) passes the sight test and the prescribed examination in signalling;

shall be entitled, on payment of the prescribed fee, to a certificate of service as a master or mate of a square-rigged or fore-and-aft-rigged sea-going or coasting sailing vessel not exceeding seven hundred and fifty tons, registered tonnage, according as his service has been

(a) as master or as mate,

(b) on a sea-going or on a coasting sailing vessel,

(c) on a square-rigged sailing ship or on a fore-and-aft-rigged sailing vessel."

The only change is the substitution of the year one thousand nine hundred and thirty-one for the year one thousand nine hundred and twenty in the first paragraph *(a)* of the section, as indicated by the underlined words in the text of the Bill.

Second Session, Seventeenth Parliament, 21-22 George V, 1931

THE HOUSE OF COMMONS OF CANADA

BILL 100.

An Act to authorize the raising, by way of loan, of certain sums of money for the Public Service.

First reading, June 19, 1931.

THE MINISTER OF FINANCE.

OTTAWA
F. A. ACLAND
PRINTER TO THE KING'S MOST EXCELLENT MAJESTY
23234 1931

2nd Session, 17th Parliament, 21-22 George V, 1931

THE HOUSE OF COMMONS OF CANADA

BILL 100.

An Act to authorize the raising, by way of loan, of certain sums of money for the Public Service.

His Majesty, by and with the advice and consent of the Senate and House of Commons of Canada, enacts as follows:—

Short title.

1. This Act may be cited as *The Loan Act, 1931.*

Loan authorized.

2. The Governor in Council may, in addition to the sums now remaining unborrowed and negotiable of the loans authorized by Parliament by any Act heretofore passed, raise by way of loan, under the provisions of the Consolidated Revenue and Audit Act, by the issue and sale or pledge of securities of Canada, in such form, for such separate sums, at such rate of interest and upon such other terms and conditions as the Governor in Council may approve, such sum or sums of money as may be required, not to exceed in the whole the sum of seven hundred and fifty million dollars, for paying or redeeming the whole or any portion of loans or obligations of Canada, and also for purchasing and withdrawing from circulation from time to time unmatured securities of Canada, and for public works and general purposes.

Charge upon Consolidated Revenue Fund.

3. The principal raised by way of loan under this Act and the interest thereon shall be a charge upon and payable out of the Consolidated Revenue Fund.
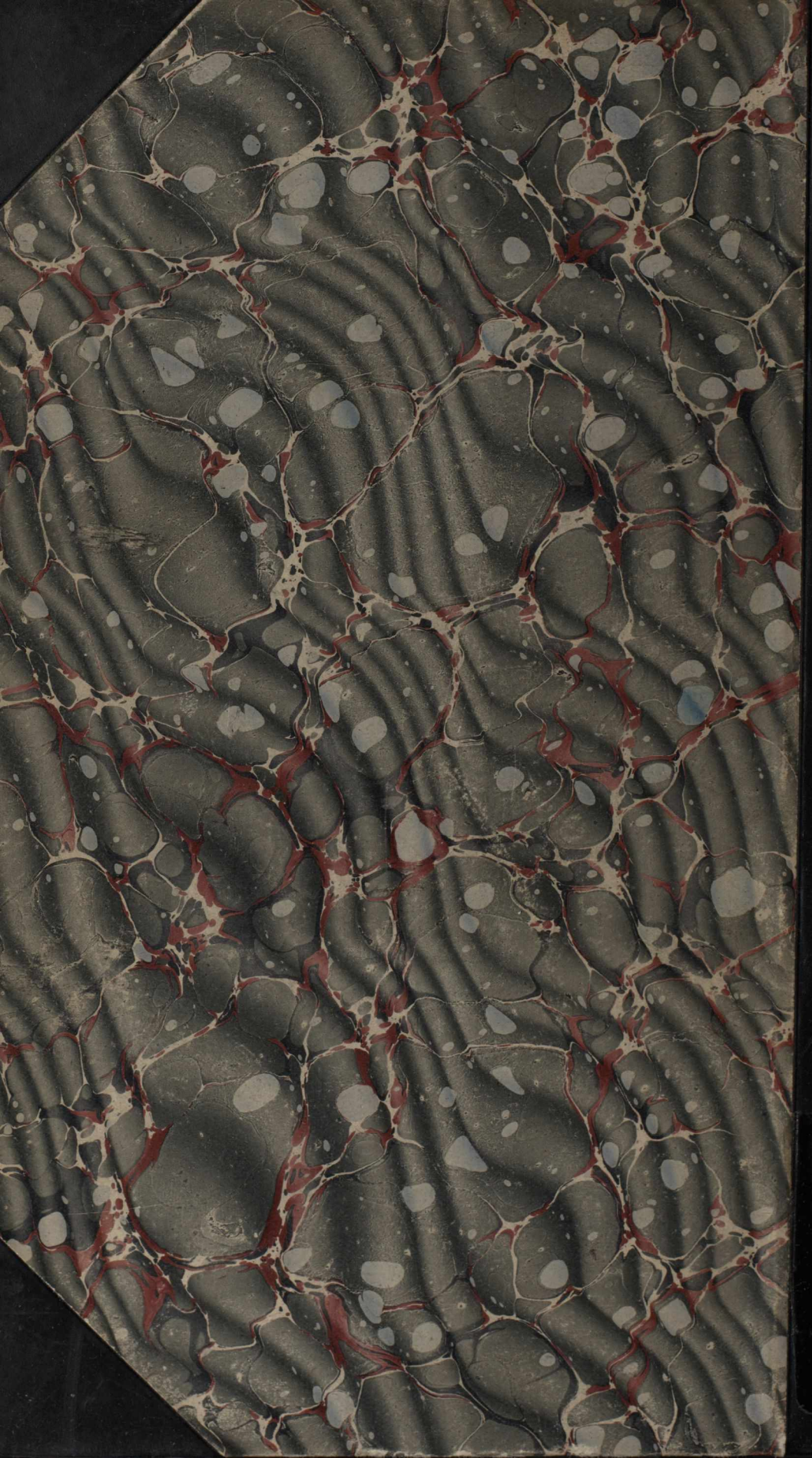
EVB.