PROCEEDINGS

OF THE

Thirty-Eighth Annual Convention

OF THE

ONTARIO

Educational Association

HELD IN

TORONTO

On the 4th, 5th and 6th APRIL, 1899

EDUCATION DEPARTMENT LIBRARY JAN 3 1901 ONTARIO.

TORONTO:
WILLIAM BRIGGS
1899

(ASSESSMENT SYSTEM)

"THE BEST FRATERNAL BENEFIT SOCIETY IN EXISTENCE."

BENEFITS GIVEN BY THE I.O.F.

Your special attention is called to this great Fraternal Benefit Society, and you are invited to become a member of it, thereby securing the following substantial benefits:

(a) FOR YOURSELF DURING YOUR LIFETIME.

1.—**The Social and Fraternal Privileges** of the Court Room.

2.—**Free Medical Attendance** by the Court Physician, except where dispensed with by by-law of the Court. Some Courts also furnish free medicine, and in certain cases trained nurses.

3.—**A Sick Benefit** of $3 a week for the first *two* weeks, $5 per week for the next *ten* weeks, and, subject to the approval of the Executive Council, $3 per week for *twelve* additional weeks of any illness. (The Sick and Funeral Benefits are optional. It costs $2 to become enrolled for them; the monthly premiums run from 40c. to $1 per month, according to age of enrolment.)

4.—**A Total and Permanent Disability Benefit** of $250, $500, $1,000, $1,500, $2,000 or $2,500 (or *one-half* the face value of your Mortuary Benefit Certificate), with exemption from the further payment of premiums or Court dues, upon total and permanent disablement by disease or accident, which may occur at any time.

5.—**An Old Age Benefit,** consisting of exemption from payment of Premiums and Court Dues after the *seventieth* year of age.

6.—**An Old Age Disability Benefit** of $50, $100, $200, $300, $400 or $500 (or *one-tenth* of the face value of your Mortuary Benefit Certificate), payable annually for ten years from the date after the *seventieth* birthday at which you are adjudged to be totally and permanently disabled by the infirmities of age. If death should occur before the ten annual payments have been made, the unpaid instalments will be paid in one sum to your beneficiaries.

7.—**An Old Age Pension Benefit,** payable annually during total and permanent disability, which you can elect to take as a substitute for the Old Age Disability Benefit upon being adjudged totally and permanently disabled by the infirmities of age. The amount of the pension is determined (*a*) by the value of the Mortuary Certificate held, and (*b*) by the age at which the total and permanent disablement occurs. On a $5,000 certificate or policy at age 70 the annual pension would be $546; at age 75, it would be $729.

(b) FOR YOUR BENEFICIARIES, AT YOUR DEATH.

8.—**A Burial Benefit** of $100 (if you have taken the Old Age Pension Benefit), to insure decent interment.

9.—**A Funeral Benefit** of $50 (if at the time of your death you are enrolled for the Sick and Funeral Benefits), to defray funeral expenses.

10.—**A Mortuary Benefit** of $500, $1,000, $2,000, $3,000, $4,000, or $5,000, or so much thereof as has not been previously paid to yourself.

For Full Details of the I.O.F. Benefit System, apply to any Officer or Member of the Order.

ORONHYATEKHA, M.D., S.C.R., TORONTO, CANADA.

JOHN A. McGILLIVRAY, Q.C., S.S., TORONTO, CANADA.

HEAD OFFICE

The Temple Building, Cor. Richmond and Bay Sts., Toronto, Can.

OFFICE FOR EUROPE—24 Charing Cross, LONDON, ENGLAND.

OFFICE FOR UNITED STATES—6436 Kimbark Ave., CHICAGO, ILL.

OFFICE FOR THE PACIFIC COAST—Phelan Building, 806 Market St., SAN FRANCISCO, CAL.

EDUCATION DEPARTMENT
LIBRARY
JAN 31 1901
ONTARIO.

PROCEEDINGS

OF THE

THIRTY-EIGHTH ANNUAL CONVENTION

OF THE

ONTARIO EDUCATIONAL ASSOCIATION

HELD IN

TORONTO

On the 4th, 5th and 6th April, 1899.

TORONTO:
WILLIAM BRIGGS
1899.

BOARD OF DIRECTORS

Ontario Educational Association

1899-1900

President - - - - - - J. E. FAREWELL, LL.B., Whitby.
Secretary - - - - - - - ROBERT W. DOAN, Toronto.
Treasurer - - - - - - - W. J. HENDRY, Toronto.

COLLEGE AND HIGH SCHOOL DEPARTMENT.

Chairman - - - - - - A. T. DELURY, B.A., Toronto.
Secretary - - - - - - F. F. MANLEY, M.A., Toronto.
Directors - - - - JOHN HENDERSON, M.A., St. Catharines.
E. L. HILL, B.A., Guelph.
W. J. ROBERTSON, LL.B., St. Catharines.
J. SQUAIR, B.A., Toronto.

PUBLIC SCHOOL DEPARTMENT.

Chairman - - - - - - - GEO. M. RITCHIE, Toronto.
Secretary - - - - - - - JOHN R. BROWN, Napanee.
Director - - - - - - - E. T. YOUNG, Hamilton.

KINDERGARTEN DEPARTMENT.

Chairman - - - - - - MISS A. E. MACKENZIE, London.
Secretary - - - - - - MISS JEAN R. LAIDLAW, London.
Director - - - - - MISS MARY E. MACINTYRE, Toronto.

TRAINING DEPARTMENT.

Chairman - - - - - - N. M. CAMPBELL, St. Thomas.
Secretary - - - - - WILLIAM WILSON, Toronto Junction.
Director - - - - - - - - J. SUDDABY, Berlin.

INSPECTORS' DEPARTMENT.

Chairman - - - - - - - W. E. TILLEY, Bowmanville.
Secretary - - - - - - - J. C. BROWN, Peterboro'.
Director - - - - - - W. S. CLENDENNING, Walkerton.

TRUSTEES' DEPARTMENT.

Chairman - - - - - - - - S. W. BROWN, Dunnville.
Secretary - - - GEO. A. AYLESWORTH, Newburgh, Addington Co.
Director - - - - - - - COL. JAMES DEACON, Lindsay.

PAST PRESIDENTS

OF THE

Ontario Educational Association.

1861,	T. J. Robertson, M.A.
1862,	Rev. John McCaul, D.D.
1863-64-65,	Daniel Wilson, LL.D.
1866-67,	Rev. William Ormston, D.D.
1868,	William McCabe, LL.B.
1869-70,	S. S. Nelles, D.D.
1871,	George Paxton Young, M.A.
1872,	Rev. William Snodgrass, LL.D.
1873,	Professor Nicholson.
1874-75,	Goldwin Smith, LL.D.
1876,	Egerton Ryerson, LL.D.
1877,	William Caven, D.D.
1878,	James A. McLellan, M.A., LL.D.
1879-80,	Robert Alexander.
1881-82,	Archibald McMurchy, M.A.
1883,	Hon. G. W. Ross, LL.D.
1884,	James A. McLellan, M.A., LL.D.
1885,	Samuel McAllister.
1886,	H. I. Strang, B.A.
1887,	Joseph H. Smith.
1888,	Robert McQueen.
1889,	D. C. McHenry, M.A.
1890-91,	William Mackintosh.
1892,	Samuel B. Sinclair, B.A.
1893,	Alexander Steele, M.A.
1894,	S. T. Lazier, LL.B.
1895,	Alfred Baker, M.A.
1896,	John Dearness.
1897,	John Munro. A. A. Jordan.
1898,	Thomas Kirkland, M.A.

CONTENTS.

PAGE

Minutes of the General Association 7
" " College and High School Department 11
" " Modern Language Section 14
" " Natural Science Section 16
" " Classical Section 19
" " Mathematical and Physical Section 25
" " Historical Section 27
" " Commercial Section 29
" " Public School Department 33
" " Kindergarten Department 41
" " Training Department 44
" " Inspectors' Department 47
" " Trustees' Department 53
Financial Statement 67
ADDRESSES AND PAPERS—
Addresses Delivered at the Opening of the Convention 69
A Consideration of the Measure of Our Task. O. C. S. Wallace, M.A., LL.D., Toronto 107
COLLEGE AND HIGH SCHOOL DEPARTMENT—
Report of Delegate of the College and High School Department to the Dominion Educational Association. W. J. Robertson, B.A., LL.B., St. Catharines 117
The Education Department's Fetich. J. C. Robertson, B.A., Victoria College, Toronto 121
MODERN LANGUAGE SECTION—
English Philology in High Schools. J. W. Connor, B.A., Berlin 132
Gerhardt Hauptmann und die Versunkene Glocke. W. H. vanderSmissen, M.A., University College, Toronto 136
Methods in French and German Conversation in High School Classes. W. C. Ferguson, B.A., London 144
Modern Languages in England. Miss A. D. Pinney, Havergal College, Toronto 151
Hall Caine. Miss Kate C. Skinner, B.A., Guelph 159
Israel Zangwill. Dr. J. W. Tupper, Western University, London 166
Anthony Hope. Miss J. W. Carter, Elora 174
Dickens' Influence on Gustav Freytag. J. S. Lane, B.A., Chatham 180
NATURAL SCIENCE SECTION—
Dynamos. Thos. H. Smyth, M.A. (Tor.), B.Sc. (Edin.), Toronto 188
Address of Honorary President, W. H. Pike, M.A., Ph.D., Toronto 197
Plants and Their Environment. W. T. McClement, M.A., Armour Institute of Technology, Chicago 203
CLASSICAL SECTION—
The Greek Aorist. A. J. Bell, M.A., Ph.D., Toronto 212
The Social Ideals of Plato and William Morris. J. C. Robertson, B.A., Toronto 220
Doerpfeld and the Stage of the Greek Theatre. A. L. Langford, B.A., Toronto 233
Systematic Reading for Classical Men. Chancellor Burwash, S.T.D., LL.D., Toronto 244

CLASSICAL SECTION—*Continued.* PAGE

Postgraduate Reading in Politics and Ethics. Maurice Hutton, M.A., Toronto University 248

Early Roman History. W. Dale, M.A., St. Mary's 254

Graduates Reading-Literature. W. J. Alexander, B.A., Ph.D., Toronto .. 264

MATHEMATICAL AND PHYSICAL SECTION—

The Mathematics of the Minus Sign. W. J. Patterson, M.A., Carleton Place 273

HISTORICAL SECTION—

Aims and Methods in Teaching History. Cecil F. Lavell, M.A., St. Thomas 280

First Steps in the Discovery and Exploration of Ontario. James H. Coyne, B.A., St. Thomas 286

COMMERCIAL SECTION—

Values. J. S. Black, Chatham 293

Can the Writing of Our Schools be Improved? J. A. Dickinson, London .. 301

PUBLIC SCHOOL DEPARTMENT—

The Relation of the Public School Course to Language and to Grammar. Edward Ward, Collingwood 304

Report of Delegate to Dominion Association. G. M. Ritchie, Toronto 311

The Newspaper in School. James S. Rowe, Markdale 315

Are Our Public Schools Training Good Citizens. W. I. Chisholm, M.A., Paisley 317

The Relation of Art to the Other Studies in Education. J. W. Milne, Odessa 324

President's Address. A. H. Musgrove, Wingham 328

The Elevation of the Status of the Teacher. E. W. Bruce, M.A., Toronto 335

KINDERGARTEN DEPARTMENT—

Does the Educational Agency which we call "The School," adequately meet the Demands of Social Progress for the Recognition of the Individual. Miss Mary Adair, Philadelphia 341

TRAINING DEPARTMENT—

A Needed Change in the Policy of our Training Schools. A. B. Shantz, Caledonia 347

Progress in Education. (An Abstract). Wm. Scott, B.A., Toronto 354

Manual Training. D. K. Clarke, Woodstock 360

Arrested Development. (Synopsis.) S. B. Sinclair, M.A., Vice-Principal, Normal School, Ottawa 362

INSPECTORS' DEPARTMENT—

Promotion Examinations—Their Importance. J. H. Knight, P.S.I., East Victoria 365

Notes from Lecture on Uniform and Promotion Examinations—How Best Conducted. Dr. D. McDiarmid, I.P.S., Glengarry 368

Alphabetic Reform.—The English Alphabet as it Ought to be Taught. J. Coyle Brown, Peterboro' 370

Should a Diploma, a Grant, Both, or Neither, be Given for Excellence of School Premises and Supplies. T. A. Craig, I.P.S., Kemptville ... 375

Knowledge and How to Make Children Love It. M. J. Kelly, M.D., LL.B., Brantford 380

The Academic Qualification of the Public School Teacher. John Dearness, I.P.S., London 384

How to Increase the Attendance at the Annual Meetings of this Section of the Ontario Educational Association. William Johnston, M.A., Athens 391

TRUSTEES' DEPARTMENT—

Manual Training in High Schools. J. E Farewell, Q.C., Whitby 398

Greater Care of the Teeth of School Children. S. W. Brown, L.D.S., Dunnville 405

Uniformity in the Public School Promotion Examination Papers Throughout the Province. John A. Leitch, Chairman Brantford Public School Board 408

The Uniting of Rural Public Schools. George Anson Aylesworth 411

PROCEEDINGS

OF THE

Thirty-Eighth Annual Convention

OF THE

ONTARIO EDUCATIONAL ASSOCIATION.

MINUTES OF THE GENERAL ASSOCIATION.

FIRST DAY—EVENING SESSION.

TUESDAY, APRIL 4TH, 1899.

The Convention met in the Public Hall of the Education Department at eight o'clock in the evening, Judge Creasor, of Owen Sound, Vice-President, in the chair.

The Vice-President expressed the deep regret and sorrow of all present that the gentleman who was elected President last year, Thomas Kirkland, M.A., had been called to his long home.

Mr. Parkinson, President of the Toronto Teachers' Association, gave the members a hearty fraternal welcome to Toronto on behalf of the said Association.

John E. Farewell, LL.B., Whitby, moved the following resolution, which was seconded by Wm. Scott, B.A., Toronto, and unanimously approved of by a standing vote:

Whereas, since the last meeting of the Ontario Educational Association, its members have been called to mourn the sudden death of their President, Thomas Kirkland, Esq., M.A.; and whereas, the long and successful professional career of the late President, and the strong place he held in the affection and esteem of his fellow educationists and the public, require that this Association shall suitably recognize the great loss the cause of education

in this province has sustained by his lamented death; therefore be it resolved that the following memorandum be entered upon its minutes, and that a copy thereof be engrossed and forwarded to his widow:

THOMAS KIRKLAND

Was born in Ireland. He was a student at the Glasnevin Agricultural School, and subsequently at the Dublin Normal School for training teachers. He arrived in this province in 1854 without means, without a friend, and without a letter of introduction, save certificates of character and certificates from his former teachers that he had been a good student.

He commenced his professional work as the only assistant teacher in the one school of the then small village of Oshawa. That prosperous town has now five schools and employs twenty-five teachers. In the following year he became Principal. He resigned that position to accept an assistant mastership in one of the Whitby schools, in order to obtain assistance in the study of classics from Mr. William McCabe, who had just been appointed the Principal and sole teacher of the Whitby Grammar School.

In 1857 he went to Barrie Grammar School as mathematical master. The success of his pupils at Toronto University, and his personal popularity, attracted pupils from distant parts of the Province and from the United States, to such an extent that the Head-master had over sixty students residing with him. He was afterwards Principal of the John Street Public School at Toronto. He next taught the Whitby High School as Principal. During his mastership this school obtained a reputable place amongst the High schools of the Province.

Upon the recommendation of Professor Young he was appointed Mathematical and Science Master of the Provincial Normal School at Toronto in 1871, and became its Principal in 1884. He was appointed a Professor of Chemistry and Botany in the Medical School of Trinity College. He discharged for many years the duties of these last mentioned exalted and responsible positions with great tact, energy and ability, until his useful career was terminated by his sudden and lamented death.

"His life was work." While winning his way from the lowest to the highest post in his profession, he took the Arts course in Toronto University, taking high honors in mathematics. He always impressed upon his pupils both by precept and example

the truth of Buffon's declaration that "genius is but protracted effort." His industry was marvellous, and while discharging his principalship of the Normal School and his professorship in Trinity College he wrote many works on mathematics and scientific subjects.

He was the friend of all, and the enemy of none. Many men now filling high and responsible positions in Canada owe their success in life to his kindly encouragement and extra professional and financial assistance which he gave to them. He was the unanimous choice of this Association for the highest office in its gift, and ably represented it at the Dominion Educational Association meeting at Halifax during last summer.

This detailed statement of his forty-four years of service in the common school, high school, training school and university work of the Province is placed on the records of this Association as an example to the teachers and students of the Province of what can be accomplished by patient study and careful preparation for each day's duty, and as an evidence of the rewards which wait on such honest and faithful work.

He died while preparing his address to be delivered to the students at the opening of the Normal School for this year. He was attentive to his religious duties, and filled important positions in connection with his church and its college. He was a man "of the larger heart and kindlier hand," a staunch friend, a faithful teacher and a wise counsellor. When this good man was buried, "the world had rarely seen a costlier funeral."

J. A. McLellan, LL.D, Hamilton, then unveiled a portrait of the late President Kirkland, and addressed the Association.

Mayor Shaw, on behalf of the corporation of Toronto, welcomed the delegates to the city.

Vice-President Creasor called upon Principal Grant, of Queen's University, to address the Association.

Principal Grant complied with the request.

Hon. Dr. Ross, Minister of Education, extended a cordial welcome to the visitors, and at the close of his address invited them to the Art and Science galleries in the building. Alderman Graham, Chairman of the Reception Committee of the City Council, extended a hearty welcome to the delegates, giving them not only the freedom of the city, but to all the public institutions.

Vice-President Creasor responded on behalf of the Association to the addresses of welcome.

The Convention adjourned.

SECOND DAY—EVENING SESSION.

Rev. Chancellor Wallace opened the meeting by reading a portion of Scripture and leading in prayer.

Moved by Mr. W. F. Chapman, seconded by Mr. W. J. Robertson, that the minutes of the Convention for 1898 be confirmed as printed. Carried.

The Secretary read a letter from the Hon. Dr. Hardy, regretting his inability to be present at the meeting on Tuesday evening.

The Treasurer read the financial statement for the year, which was accompanied by the Auditor's report.

Moved by Mr. W. J. Hendry, seconded by Mr. W. Scott, that the Treasurer's report and the Auditor's report be received and adopted. Carried.

Prof. Adam Shortt, of Queen's University, Kingston, then addressed the Association on "Characteristics of Economic History of Canada."

Chancellor Wallace, of McMaster University, addressed the Association on "A Consideration of the Measure of Our Task."

Moved by F. F. Manley, M.A., seconded by Wm. Scott, B.A., that the cordial thanks of this Association be tendered to Professor Shortt and Chancellor Wallace for their able addresses. Carried.

Dr. McCallum, of Toronto University, addressed the Association on the subject of circulating libraries.

Moved by Wm. Scott, seconded by A. H. McDougall, and resolved, that the subject of the proper academic preparation of Public School teachers be referred to the following committee, with instructions to report to this Association at the annual meeting in 1900: Dr. Burwash, Prof. Fletcher, Prof. A. B. McCallum, Prof. Fraser, Mr. Thompson (Hamilton), Mr. Embree, Mr. Dearness, Mr. Prendergast, Mr. Ballard, Mr. Hughes, Mr. DeLury, Mr. Groves, Mr. Ritchie, Mr. Doan, and Mr. Scott.

Moved by Mr. W. J. Hendry, seconded by Mr. J. C. Brown, that the action of the Board of Management in granting the Trustees Department an annual sum of fifty dollars, to cover in full the extra printing, mailing and postage necessary in that department, be confirmed. Carried.

The election of officers resulted in the following gentlemen being chosen;

President - - -	J. E. Farewell, LL.B., Whitby.
Secretary - - -	Robert W. Doan, Toronto.
Treasurer - - -	W. J. Hendry, Toronto.

Moved by Mr. J. Coyle Brown, Peterboro', seconded by Mr. S. B. Sinclair, B.A., Ottawa, that the next meeting of the Association be held in Toronto. Carried.

Moved by Mr. R. W. Doan, seconded by Mr. S. McAllister, that the thanks of this meeting be tendered to the Minister of Education for his very great kindness in allowing us the use of this building and giving directions for the decorations, under the tasteful supervision of Dr. May; to the railway companies for the courtesy extended to us in the matter of railway facilities, and also to the City Press for the full and accurate reports given during the sessions of the Association. Carried.

Moved by Mr. J. Anderson, Arthur, seconded by Col. Farewell, Whitby, that the thanks of the Association be and are hereby tendered to Secretary Doan for the manner in which he has conducted the business of the Association. The motion was carried by a standing vote, and the thanks of the Association were tendered to the Secretary by the Chairman.

After singing the National Anthem, the Chairman declared the Convention closed.

MINUTES OF THE COLLEGE AND HIGH SCHOOL DEPARTMENT.

Under the auspices of the Department a joint meeting of all the departments of the Ontario Educational Association was held in the Public Hall, St. James' Square, on April 5th, 1899, at nine o'clock a.m. The President, Mr. R. A. Thompson, M.A., took the chair.

The subject for discussion—"Shall Arithmetic and Grammar be restored to their former places on the Junior Leaving Examination?" was introduced by Mr. F. F. Manley, and addresses were made by Mr. Wm. Scott and Mr. J. Wallis. After considerable discussion it was moved by Professor Robertson, seconded by Mr. Burt, and unanimously adopted, that in the opinion of this meeting the requirements and standard for teachers in Arithmetic and Grammar should be considerably higher than for university matriculation.

The joint meeting then adjourned and the Department resumed in the lecture room of the Normal School at ten o'clock.

The minutes of the proceedings of the annual meeting, 1898, were, on motion of Messrs. Squair and Strang, taken as read.

The President, Mr. R. A. Thompson, made a few introductory remarks, and Mr. W. J. Robertson read the report of his visit as a delegate to the annual meeting of the Dominion Educational Association, held last year at Halifax, N.S.

The report was received and adopted, and ordered to be printed in the Proceedings.

Dr. Burwash read the following report of the Committee appointed last year on the subject of High School Entrance Examination:

Informal Report from the Committee on High School Entrance Examination.

The Committee met at the call of the Convener, and after lengthy discussion were unable to agree on any finding, and requested the Chairman to lay before the College and High School Department a condensed statement of the difficulties of the case.

The problem presented to the Committee for solution included three elements:

1. The desirability that students learning either the Ancient or the Modern languages should begin their studies at an early age.

2. The waste of time involved in forcing students to pursue languages which are dropped as soon as they have passed the required examination and are practically lost.

3. The need of a more complete curriculum in the Public schools than is offered in preparation for the present entrance examination.

To meet these needs three propositions have been made:

1. A preparatory class in the Collegiate Institute or High School to which students desiring a classical education may be admitted at an early age, and continuation classes in the Public schools meeting the wants of those who desire a more extended scientific and commercial course without languages.

Objection: Duplication of work.

2. Two classes of schools—classical in large centres, scientific in smaller places.

Objection: Could not be carried with the consent of the people concerned.

3. Two entrance examinations—one for classical pupils entering on lower standard, and the other higher for science students.

The objections to these are the abuse of the lower entrance and the multiplication of examination.

The report was received, discussed, and adopted, and the Committee discharged.

The meeting then adjourned.

THURSDAY, APRIL 6TH, 1899.

The Department resumed at 10 a.m., the chair being taken by Mr. A. T. DeLury.

Professor Robertson, of Victoria College, gave his address on "The Education Department's Fetish."

After considerable discussion, in which Professor Dale, Messrs. Ellis, Burt, Rogers, Patterson and Dixon joined, it was moved by Mr. Levan and seconded by Mr. Embree, and adopted, that this meeting is of the opinion that the undue influence of uniformity aggravated by too frequent changes is the cause of grave evils in the matter of secondary education.

Professor Robertson's address was ordered to be printed in the Proceedings, and an abstract to be made and sent to the Committee appointed on the preceding evening at the general meeting of the Association.

It was moved by Mr. Manley, seconded by Mr. Davison, that in the opinion of this Department, the time has arrived for establishing a system of superannuation in connection with the teaching profession of Ontario, and that the Minister of Education be respectfully requested to give the subject his consideration at the earliest convenience.

It was moved in amendment by Mr. Embree, seconded by Mr. McMurchie, of Harriston, and carried, that the matter be referred to the Board of Directors of the General Association.

It was moved by Mr. Stevenson, seconded by Mr. Steele, and adopted, that this Department requests the Senate of the University of Toronto hereafter to appoint to membership on the Board of Arts Studies, both of the High School representatives to the Senate.

The following committee was appointed to consider the question of paying the travelling expenses of the High School representatives on the Senate of the University of Toronto—to report at the next annual meeting: The President, Secretary, and Messrs. MacMurchy, Spotton and Embree.

It was moved by Mr. Strong, seconded by Mr. Embree, and adopted, that in the opinion of this Department it would be better

to discontinue the publication of the results of the Departmental examinations under the names of the several schools and centres.

The following officers were elected:

President	-	A. T. DeLury, M.A., Toronto.
Vice-President		John Henderson, M.A., St. Catharines.
Secretary	-	Fred. F. Manley, M.A., Toronto.

The meeting then adjourned.

The representatives from the six sections on the Committee of this Department are:

Classical	- -	John Henderson, M.A., St. Catharines.
Mathematical	-	A. H. McDougall, M.A., Ottawa.
Mod. Language		John Squair, M.A., Toronto.
Nat. Science	-	E. L. Hill, B.A., Guelph.
Historical	-	W. J. Robertson, M.A., LL.B., St. Catharines.
Commercial	-	W. E. Evans, Galt.

The representatives of the College and High School Department on the Board of Directors of the Ontario Educational Association are: Messrs. DeLury (*ex-officio*), Manley (*ex-officio*), Henderson, Hill, Robertson and Squair.

FRED. F. MANLEY,
Secretary, College and High School Department.

MINUTES OF THE MODERN LANGUAGE SECTION.

The thirteenth annual meeting of the Association opened at 10 a.m. on Tuesday, April 4th, in the Education Department, the President, Mr. J. H. Cameron, in the chair. After the appointment of auditors and Nominating Committee, Professor James Cappon read a paper on "Wordsworth's Lyrical Ballads."

At the afternoon session papers were read on "Conversational Methods in French and German," by Messrs. W. C. Ferguson and A. E. Lang. Miss A. D. Pinney read a paper on "Modern Languages in England," and Mr. J. S. Lane closed the day's session with a paper on "Dickens' Influence on Gustav Freytag."

The Association reassembled at 2 p.m. on Wednesday, April 5th. Mr. J. W. Connor read a paper on "English Philology," and Mr. W. H. VanderSmissen one in German on "Gerhardt Hauptmann und die Versunkene Glocke."

The following officers for 1899-1900 were elected:

President	- -	Mr. A. Stevenson.
Vice-President	-	Mr. W. H. Fraser.
Secretary-Treasurer		Mr. J. Squair.
Councillors	- -	Mr. J. H. Cameron, Miss A. D. Pinney, Miss J. W. Carter, Mr. A. E. Lang, Mr. A. W. Burt, Mr. J. C. Rogers, Mr. W. C. Ferguson, Mr. F. F. Macpherson, Mr. A. W. Wright, Mr. J. N. Dales, Mr. L. E. Embree, Mr. W. Libby.

The Committee on University Matriculation made the following recommendations: Pass English for 1901: Omit "Gray"; omit "Ode to the Duke of Wellington," and substitute the "Passing of Arthur" for the "Epic including Morte d'Arthur," and add a few pieces from Tennyson. For 1902: For "The Lady of the Lake" substitute "The Lay of the Last Minstrel," and several of the shorter poems of Scott, not, however, "The Song of Constance" in Marmion or "Glenfinlas."

In the Honor work of the same years restore the second play of Shakespeare, but have the questions on the Pass selections only such as will show that these selections have been carefully read, and are understood--practically as it has been of late.

The Committee also suggest that the Education Department be requested to recommend as supplementary reading, short complete prose selections.

In French—To the list of short pieces for 1902 add: La Fontaine, le Chêne et le Roseau; Le Père de Latour, le Chant des Oiseaux; Berquin, le Nid de Fauvette; De Musset, Rappelle-toi instead of Tristesse.

In German for the same year—Luise Hensel, Müde bin ich; Gleich, Schneeglöckchen; Güll, Vergissmeinnicht; Heine, Mein Kind wir waren Kinder; Goethe, Das Bächlein: Grimm, Hans im Glück, instead of Rothkäppchen; Leander, Vom unsichtbaren Königreich and Heine im Sumpf, instead of pp. 1-44; Uhland, Einkehr.

It was decided to transmit this report to the Senate of the University of Toronto without pronouncing an opinion upon it.

The Association reassembled on Thursday, April 6th, at 2 p.m. Miss K. C. Skinner read a paper on "Hall Caine," Miss J. W.

Carter read one on "Anthony Hope," and Dr. J. W. Tupper one on "Zangwill."

The Secretary was made the representative of the Association on the Executive of the College and High School Department.

A motion by Mr. A. W. Burt to make sight translation the sole test of translation from French and German into English was discussed, but not adopted by the Association.

The Association adjourned.

MINUTES OF THE NATURAL SCIENCE SECTION.

TUESDAY, APRIL 4TH, 1899.

The first session was held at 2 p.m., President Smyth in the chair.

The minutes of last meeting were read and approved.

Mr. H. B. Spotton reported for Committee *re* Science in Public Schools, that he had seen the Minister of Education. The Minister favored the idea of a committee, and had named gentlemen to act in that capacity.

Moved by Mr. Merchant, seconded by Mr. Gundry, that the Secretary act as press reporter. Carried.

The President, T. H. Smyth, M.A., B.Sc., read a paper on the Dynamo, dealing with many of the chief points in the magnetic features of its action.

Moved by Mr. Merchant, seconded by Mr. Giffin, that the President's address be printed in the Proceedings. Carried.

Under the topic of "Questions in Chemistry," it was agreed that the answers to questions submitted to the President should come up to-morrow.

Principal Scott, of the Normal School, offered to present copies of the "List of Plants" in the Provincial Herbarium to all who wished them. He very kindly sent two hundred copies for distribution.

Mr. G. K. Mills, B.A., of Stratford, opened the discussion of "Science Curriculum and Text-Books." He dealt with the results obtained by addressing circulars to all Science masters in the Province. Mr. Mills dealt with Biology. Mr. S. Silcox, B.A., B.Pæd., London, had undertaken to lead the discussion as regards Chemistry, and Mr. W. H. Stevens, B.A., Lindsay, the discussion as regards Physics.

Moved by Mr. Ellis, seconded by Mr. Spotton, that we meet at 1.30 p.m. on Thursday for continuation of discussion, and that the Secretary read a synopsis of Professor McClement's paper on "Plant Environment," and that the paper be published *in extenso* in the Proceedings. Carried.

WEDNESDAY, APRIL 5TH, 1899.

The Association met in the Chemical Building, President Smyth taking the chair at 2.10 p.m.

Professor Pike gave answers to some questions in Chemistry.

The election of officers resulted as follows:

Hon. Pres. - R. Ramsay Wright, M.A., B.Sc., Toronto.
President - W. H. Stevens, B.A., Lindsay.
Vice-Pres. - W. S. Ellis, B.A., B.Sc., Kingston.
Sec.-Treas. - E. L. Hill, B.A., Guelph.
Councillors - M. A. Chrysler, B.A., Toronto Junction; G. K. Mills, B.A., Stratford; A. R. McRitchie, B.A., Caledonia; J. H. Smith, M.A., Ridgetown; S. Silcox, B.A., P.Pæd., London.

Moved by Mr. Ellis, seconded by Mr. Hill, that Mr. F. W. Merchant represent our Association in presenting to the Minister of Customs our petition *re* importation of apparatus. Carried.

Professor Pike then delivered his address as Hon. President. This was a retrospect of chemical progress during the past thirty-three years. The paper was listened to with much interest, and was highly appreciated by the Association.

At the next session, April 6th, there was passed a unanimous vote of thanks to the Hon. President for his address, coupled with a request that it be printed in the Proceedings.

Dr. W. Lash Miller and Dr. F. B. Kenrick gave their paper and demonstration on "Electro-Chemistry." The history of the origin of the science of electro-chemistry was related, reference being made to the experiments of Galvani and Volta. Then followed in order notes of the work of Berzelius in 1803, Grotthuss in 1805, Faraday in 1834, Hittorff in 1853, Clausius in 1857, and Arrhenius in 1885.

The peculiar features of electrolysis were fully illustrated by means of an interesting mechanical device constructed by Dr. Miller to show the arrangement and rearrangement of atoms in the process of electrolysis.

At the conclusion, the hearty thanks of the Association were tendered to Drs. Miller and Kenrick for their kindness.

The meeting adjourned to the Physical Lecture Room of the University, where a joint meeting was held with the Mathematical and Physical Association, to hear a lecture by Mr. C. A. Chant, B.A., on "Electric Waves and Wireless Telegraphy." This was a highly interesting description and demonstration of the methods of propagation, reflection, refraction and polarization of electric waves. The similarity of electric waves to light waves was clearly shown. Much interest was manifested by all present in the able presentation of the subject.

THURSDAY, APRIL 6TH, 1899.

The session began at 1.30 p.m. in the Normal School.

Upon motion the Secretary was appointed representative to the College and High School Department.

Moved by Mr. Giffin, seconded by Mr. Smyth, that a very hearty vote of thanks be extended to Mr. C. A. Chant, B.A., for his very instructive, interesting and excellent lecture on "Wireless Telegraphy," and that the Science teachers fully appreciate the fact that the address cost the lecturer considerable labor, and that the Secretary be instructed to send the thanks of the Association to Mr. Chant. Carried.

Mr. A. P. Gundry gave a synopsis of his paper on the "Teaching of Botany in Interests of Agriculture," showing that Botany could be taught with proper educational value and at the same time be of value from an agricultural standpoint.

Mr. J. H. Smith, M.A., Ridgetown, gave a synopsis of his paper on "Practical Results of Science in our Schools," in which valuable points were stated.

The Secretary gave a synopsis of Professor McClement's paper.

The discussion of "Science Curriculum and Text-Books" was resumed.

Mr. Stevens dealt with the subject of Chemistry, outlining the results derived from the circulars sent out by Mr. Mills.

Professor Wright, Messrs. Chant, W. J. Loudon, G. A. Smith, Spotton, and others took part in the discussion.

Moved by Mr. Smyth, seconded by Mr. Ellis, that the following be a committee to formulate courses in Physics, Chemistry and Biology: Professor Wright and Messrs. Loudon, Chant, Turner, Ellis, W. Lash Miller and the mover. Carried.

Upon resolution the committee named was authorized to request the Senate of the University of Toronto, that those students who now take Junior Leaving certificates with Botany, Physics and Chemistry, be allowed to complete their matriculation by taking another language.

MINUTES OF THE CLASSICAL SECTION.

TUESDAY, APRIL 4TH, 1899.

The Association met at 10.30 a.m., in University College, the President, Dr. A. J. Bell, in the chair. Mr. A. Carruthers was appointed Secretary, *pro tem.*

The minutes of the last session of the previous year having been published in full in the Proceedings of the Ontario Educational Association for 1898, were taken as read. Mr. S. F. Passmore was appointed to report the proceedings of the Association to the press. The President then gave an address dealing with the formation of the "Greek Aorist." *

Mr. A. L. Langford followed with a paper on "Doerpfeld and the Stage of the Greek Theatre." *

At 12.30 the members of the Association adjourned to the University College Residence, where they were entertained at luncheon by the members of the classical staff in University College and Victoria College.

When the work of the Association was resumed at 2 p.m., a paper was read by Mr. A. Carruthers on "Recent Discoveries in Greek Literature." After mentioning, by way of introduction, the Oxyrhynchus Papyri, and the recently discovered fragmentary MSS. of Callimachus, Hypereides, Herondas and others, he proceeded to deal at greater length with Aristotle's Constitution of Athens, and the poems of Bacchylides. He described the appearance, state of preservation and contents of these MSS., going on to show wherein Aristotle differs from previously known authorities as regards the sequence of events, and the relative prominence of some of the actors in early Athenian history. He also touched on some of the peculiarities of Bacchylides, as exemplified in the MSS., and showed wherein he resembles and differs from Pindar.

Mr. J. C. Robertson then read a paper on "The Social Ideals of Plato and William Morris." *

* This paper is published in the Proceedings.

Then followed a series of shorter papers and addresses dealing with the subject of "The Classical Graduate's Reading."* Chancellor Burwash spoke first on the general subject of the classical graduate's reading and its relation to life.

Mr. W. J. Alexander then took up the question of "The Reading and Study of Literature."*

Mr. W. Dale followed in an address dealing with the proper way in which to pursue the study of history. The natural order, he said, was to amass facts first, then arrange them, then fill in lacunae. The historical student should be sure to get the environment of his author, that is, the facts of his life and his social and political relations. Above all he should have a sense of the unity of history, and a general framework to which to fit whatever details he investigated. "Get well one book in this way," he said, "and you have read all books." As one typical framework, he suggested the great epic poets, each of whom gives up to his own period the spiritual development of the Aryan race. For this reason the classical student is particularly well situated to understand the real meaning of all subsequent history. He closed by giving several illustrations of the way in which often even literature proper can only be understood as part of history.

Mr. M. Hutton followed with a paper on "Post-Graduate Helps to the Study of Politics and Ethics."*

After a few words from Principal Grant, of Queen's College, who was present, the meeting adjourned.

WEDNESDAY, APRIL 5TH, 1899.

The Association met at 2 p.m. The first business was the election of officers for 1899-1900. The following were elected:

President - - - -	S. F. Passmore, M.A.
Vice-President - - -	J. Colling, B.A.
Secretary-Treasurer - -	J. C. Robertson, B.A.

Councillors—H. J. Crawford, B.A., D. A. Glassey, B.A., R. A. Little, B.A., F. C. Colbeck, B.A., W. J. Fenton, B.A., J. Waugh, B.A., D.Pæd., J. E. Dickson, B.A., W. N. Bell, B.A.

Moved by Mr. Crawford, seconded by Mr. Park, that an Honorary President be chosen in addition to the usual officers. Carried.

* This paper is published in the Proceedings.

Mr. W. Dale, M.A., was then chosen Honorary President. J. Henderson, M.A., was elected representative on the Committee of the College and High School Department.

The report of the Committee on the Status of the Classical Association was then read as follows:

The Classical Association of Ontario:

Your Committee appointed at the last annual meeting of the Classical Association to "meet the Printing Committee and insist upon their observing the original agreement in regard to the printing of papers, and to consider the question of modifying the connection of the Classical and the General Association," hereby beg leave to report as follows:

To take the latter point first they find that to the present arrangements regarding meetings there are the following objections:

1. The Association's meetings are so broken up that the interest and profit are seriously interfered with, and for two of the four sessions the attendance is very sparse.

2. There is great difficulty in securing papers at this time of the year from High School teachers, who are also often too busy or too weary even to attend. The membership has fallen considerably since the present arrangements were made.

3. In the universities, lectures or examinations are still going on during the days of meeting. This makes it difficult for college men from Toronto, and virtually impossible for college men outside Toronto, to attend the sessions.

4. For a similar reason it is exceedingly difficult to secure at Easter the attendance of professors of Greek or Latin from outside the Province.

5. So much attention is generally required, through the combination with other Associations, for the consideration of High School politics and new Departmental Regulations or University curricula that too little time and interest are left for classical study. The atmosphere of the Education Department at Easter is not favorable to programmes such as we had yesterday.

But on the other hand they recognize the grave objections to sundering the connection now existing with the Ontario Educational Association.

They are not prepared to recommend for adoption any one method of avoiding all the difficulties of the case, but desire to present for consideration two plans, viz.:

EDUCATION DEPARTMENT LIBRARY ONTARIO

1. To secure a rearrangement of the Easter sessions, by which the Classical Association shall have two whole days of the three (with an evening meeting on one night, if thought advisable), the College and High School Department to have the whole of the remaining day—either the first or the third.

2. To arrange for holding a meeting of the Association during the Christmas vacation. At the same time connection could be maintained with the Ontario Educational Association by holding a business meeting at Easter, at which time also more important meetings could be held when matters of special moment were coming up.

Your Committee beg further to report that they met the General Board of Directors in regard to the printing of papers and the violation of the agreement between the General Association and the Classical Association. The only concession secured was that papers over 3,000 words will be printed if the Classical Association undertakes to pay for the amount exceeding that limit.

In regard to this matter your Committee recommend that a formal protest be forwarded to the General Association calling attention to the violation of the agreement, and insisting on its being observed until at least it is changed by mutual agreement.

All of which is respectfully submitted.

After some discussion it was decided to adjourn the debate on the second portion of the report, which was felt by many to be unnecessarily strong. In connection with the first part of the report it was moved by Mr. Reid, seconded by Mr. Robertson, and carried, that the first of the two plans suggested be hereby approved, and that the proper steps be taken to bring the matter before the associations interested.

Mr. J. E. Wetherell then discussed the question, "Should the Study of Latin be Compulsory for Public School Teachers?" He held that it should not, for the following reasons: That this is contrary to the trend of education in modern times and causes a waste of time; that the low standard prevailing in our examinations makes the study of little benefit to those who go no further with it; that compulsory Latin will pave the way to poor teaching of Latin by Public School teachers in continuation classes; that it is in part responsible for the noticeable decrease in the attendance at High schools. The discussion that ensued showed that the Association was by no means disposed to agree with Mr. Wetherell. Among those who spoke were Mr. Reid, Mr. Strang, Mr. Hutton and Mr. Dale.

Mr. C. A. Mayberry then introduced the subject of the requirements for matriculation in Latin, basing his remarks largely upon the replies to a circular he had issued to some sixty of his fellow-teachers. These, he said, were practically unanimous that the amount of authors now presented was too great, and should be reduced by about 25 per cent.; that opinion was divided as to a combined paper on Grammar and Composition; that to continuous prose there was not much opposition, except such as depended merely on the character of the paper set. He advocated not merely a reduction in the amount of text, but also the prescription of some easier Latin to bridge the gap between the introductory lessons and Caesar.

Considerable discussion followed, in the course of which the following motions were made:

1. Mr. Henderson and Mr. Waugh—That there be no Grammar questions on the prose paper. Carried.

2. Mr. Levan and Mr. Milner—That continuous prose be retained, which shall be of an easy character and based on Caesar. Carried.

3. Mr. Crawford and Mr. Henderson—That the prescription be about 50 chaps. of Caesar, 25 chaps. of Nepos, and 400 lines of Virgil.

In amendment, Mr. Strang and Mr. Wetherell—That the requirements in Latin authors be reduced by about 25 per cent. amount of the Latin at present prescribed.

In amendment to the amendment, Mr. Henderson and Mr. Passmore—That the Association recommend that the work in Latin for Junior Matriculation be the Caesar as recommended in the second part of the proposed curriculum; and that the work in Virgil be 600 lines of the Eclogues, alternating with Æneid II.

Moved by Mr. Connor, seconded by Mr. Waugh—That the debate be adjourned. Lost.

The amendment to the amendment was then put and lost, and the amendment of Mr. Strang was carried.

The meeting then adjourned.

Thursday, April 6th, 1899.

At 2 p.m. the Classical Association met in joint session with the Historical Association, the President of the latter, Mr. H. J. Cody in the chair. Mr. W. Dale read a paper on "Early Roman History." *

* "Early Roman History." (See page 254.)

The President of the Classical Association was then called to the chair, while Mr. W. S. Milner read a paper, entitled "The Roman and American Republics—A Parallel and Contrast." The year 264 B.C. he considered of parallel importance in Roman history with that just closed in the history of the American republic. In the century just closed Rome had absorbed the peninsula, either incorporating conquered communities—a great advance upon the conceptions of the city-state—or leaving them practical autonomy, binding them only to co-operate in the general defence. It is not a century since the Americans passed the Ohio. Their welcome of the world to settlement is hardly to be paralleled; but both peoples now begin to show signs of a consciousness that the citizen-body has reached its limits. The "states" in America, as the "tribes" in Rome, are probably "closed."

In the issues of 264 he traced the advance of Rome into the position of a world-power—an advance not less rapid than even the history which is now in the making, and equally unpremeditated.

Under the problem now thrust upon her of governing her transmarine possessions, the Roman republic fell. Does her fall throw any light upon the problem awaiting the United States? Did the problem of governing dependencies, in the changes produced in the constitution of the republic, bring only more quickly the transition —inevitable as the political philosophy of Greece and Rome, and as even the political philosophers of the last century held—of democracy into tyranny? Great as were these changes in Rome, her fall was due to economic causes. If the American republic fails it will be from like causes, internal and not connected with the political problems of empire. The destiny of the Roman republic was being worked out within the state itself, and not in the world-sphere. If American democracy fails from within, it will exploit its dependencies as Rome exploited the Mediterranean world. It is doubtful whether any two nations present a more remarkable resemblance than republican Rome of the last century and the American republic of to-day in the exploitation of capital.

The meeting then adjourned.

MINUTES OF THE MATHEMATICAL AND PHYSICAL SECTION.

TUESDAY, APRIL 4TH, 1899.

The Section opened at 2.15 p.m., the President, Mr. A. H. McDougall, B.A., in the chair.

The President read his address on "The Theory of Proportion in Geometry."

Moved by Mr. F. F. Manley, seconded by Mr. R. A. Thompson, that the paper read by Mr. McDougall be printed in full by the Educational Association. Discussion followed on the subject of having papers printed, and dissatisfaction with the amount of space accorded to the Mathematical Section was expressed by several members.

It was moved by Mr. J. H. McGeary, seconded by Dr. Birchard, that a committee consisting of Mr. R. A. Thompson, the present President and Secretary be appointed to confer with the Printing Committee to inquire into the amount of space to be allotted to the Mathematical Section, and an endeavor made to have the space occupied by the Section. Carried.

The report of the Secretary, with respect to the circulars issued last year, *re* Arithmetic, was read, and discussion followed in which Messrs. MacMurchy, Taylor, R. A. Paterson, W. J. Patterson, Thompson, McGeary, Prendergast and Ballard took part. Further consideration of the matter was deferred until Wednesday afternoon.

A paper on "Weights and Measures" was read by Mr. Wm. Prendergast, B.A., showing the inadequacy of the present systems and advocating a uniform metrical system.

The Section then adjourned.

WEDNESDAY, APRIL 5TH, 1899.

The Section met at 2.15 p.m., the President, Mr. McDougall, in the chair. The minutes of the previous meeting were read and approved.

Principal Galbraith, of the School of Practical Science, Toronto, gave an address on "Geometry." Discussion followed in which Messrs. Odell, McGeary, Taylor, DeLury and Dr. Birchard took part.

A hearty vote of thanks to Professor Galbraith for his very interesting address was moved by Mr. DeLury, seconded by Mr. Odell. Carried.

Principal Scott addressed the meeting, asking for the appointment of members from this Section on a general committee to consider the whole question of education. Messrs. DeLury, Prendergast and Ballard were elected to represent the Mathematical Section on that committee.

The Section then repaired to the University building where a very instructive lecture on "Wireless Telegraphy" was delivered by Mr. Chant, after which the Section adjourned.

THURSDAY, APRIL 6TH, 1899.

The Section met at 2.10 p.m., Mr. A. H. McDougall, President, in the chair. The minutes of the previous meeting were read and approved.

The election of officers was held with the following result:

Honorary President	-	A. H. McDougall, B.A.
President - -	-	J. H. McGeary, M.A.
Vice-President -	-	R. A. Gray, B.A.
Secretary-Treasurer	-	R. Gourlay, B.A.
Councillors -	-	T. Murray, B.A., H. S. Robertson, B.A., S. Martin, B.A., A. T. DeLury, B.A., A. C. McKay, B.A., W. E. Rand, B.A., R. A. Thompson, B.A., W. Taylor, B.A.

Representative to the College and High School Department, A. H. McDougall, B.A.

Mr. Manley reported for the Committee appointed on Tuesday *re* Printing.

A paper was read by Mr. W. J. Patterson, M.A., on "The Mathematics of the Minus Sign."

An address was given by Mr. R. A. Gray, B.A., on "Interest and Annuities." Messrs. Manley, Taylor, W. J. Patterson, Martin, W. J. Robertson and Thompson took part in the subsequent discussion.

The meeting then adjourned.

R. A. GRAY, *Secretary.*

MINUTES OF THE HISTORICAL SECTION.

TUESDAY, APRIL 4th, 1899.

The Association met at 2.00 p.m., the President, Prof. H. J. Cody, in the chair.

The President delivered an address on "The Status of History in Secondary Schools."

W. Houston, M.A., Lecturer on History in McMaster University, exhibited a set of hand-made charts devised for the purpose of illustrating the evolution of the states-system of North America. The method of producing them was explained as involving: (1) securing an outline of the continent on ordinary tracing linen; (2) printing from this the required number of copies by the action of sunlight on prepared paper; and (3) coloring with oil crayons to suit the political condition of the continent at a given date. The periods chosen by Mr. Houston were 1750, 1763, 1783, 1803, 1819, and 1853. By the last of these dates the United States territory, as it was prior to the purchase of Alaska, was complete, and the boundary between the United States and British America was finally determined to the Pacific. The author of the charts gave a brief historical explanation of the state of the continent at each date, and connected it with those that went before it in the series.

Cecil F. Lavell, M.A., St. Thomas, read a paper on "Aims and Methods in Teaching History." A discussion followed, in which Prof. Wrong, Mr. W. J. Robertson and Miss Carnochan took part. Prof. Wrong and Mr. Houston urged the necessity of learning the dates of the reigns of the English kings.

Prof. Wrong and Mr. W. J. Robertson were appointed to meet the Senate Committee on the following Thursday, and state the views of the Historical Association on the proposed changes in the matriculation examination as far as history was concerned.

The Secretary presented the report of the Committee appointed at the last meeting to consider the status of history in the secondary schools. The discussion of the various clauses was not concluded when the meeting adjourned.

WEDNESDAY, APRIL 5TH—2 P.M.

The election of officers for the ensuing year was held. The following officers were elected :

President - -	Prof. Adam Shortt, Queen's University.
Vice-President -	Mr. Andrew Paterson, M.A., Hamilton.
Secretary-Treasurer	Mr. W. C. Michell, B.A., Jarvis Street Collegiate Institute, Toronto.
Councillors - -	Miss Carnochan, Niagara; Miss Spence, B.A., Toronto; Prof. Cody, M.A., Toronto; Prof. Wrong, M.A., Toronto; Mr. Houston, M.A., Toronto; Mr. Boyle, Toronto; Mr. Clark, Toronto; Mr. Lavell, M.A., St. Thomas.

Representative on College and High School Department—Mr. W. J. Robertson, M.A., LL.B., St. Catharines.

Prof. Adam Shortt delivered an address on "The Origin of Organized Society." Mr. J. H. Coyne, B.A., read a paper on "The Early Exploration of Ontario."

On motion of Prof. Wrong, Mr. Burt, of Brantford, was appointed a member of the Committee chosen at the last session to interview the Senate with reference to proposed changes in the matriculation examination.

The discussion of the report of Committee on the Status of History was resumed, and Prof. Wrong and Messrs. Robertson and Michell were appointed a committee to interview the Minister of Education with reference to the clauses of the report adopted by the Association.

THURSDAY, APRIL 6TH—2 P.M.

A joint meeting was held with the Classical Association.

W. Dale, M.A., contributed a paper on "Early Roman History." Prof. W. S. Milner, M.A., followed with a paper on "The Roman and American Republics—A Parallel and a Contrast."

MINUTES OF THE COMMERCIAL SECTION.

Tuesday, April 4th, 1899.

The Association met in Mr. Murray's room in the Model School on the above date. The meeting was called to order at 11.15 a.m., and opened with prayer by the President.

The roll of officers was called, and the President, Vice-President, Secretary-Treasurer, and Councillor, Mr. Wismer, answered to their names.

The minutes of the last meeting were read and approved.

On motion, Messrs. Eldon and Dobbie were appointed Auditors.

The Secretary was appointed press reporter.

Mr. Wismer reported that the Committee appointed last year to draft a resolution of sympathy with Mr. Grant, had complied with the request of the Association, and had received an appreciative reply from Mr. Grant.

Mr. Wismer reported for the Committee on Models for Drawing that they had not been able to find any sets of models that they could recommend for use in the schools.

The President gave his opening address—subject, "Drawing." He advocated the co-operation of the Commercial masters with the Public School teachers for the improvement of Drawing. Discussion followed.

It was moved by Mr. Dobbie, and seconded by Mr. Wismer, that the President and Mr. Eldon be a committee to draft a resolution relative to the subject of Drawing, to be presented to the Association this afternoon, and if passed by this Association, to be sent to the Public School Department. Carried.

The meeting then adjourned.

The Afternoon Session.

The meeting was called to order at 2.15 p.m. by the President.

Mr. Black, of Chatham, gave an interesting paper on "Values in Book-keeping." Discussion followed by Messrs. Snowdon, Wismer, Underhill and Eldon.

It was moved by Mr. Black, seconded by Mr. Eldon, and carried, that this Association express the wish that the examiners next year make no deductions in Book-keeping for the omission of "Dr." and "Cr." or "To" and "By" or the entries in the Explanation Column, and that a copy of this resolution be sent to the Department.

The thanks of the Association were tendered Mr. Black for his valuable paper.

Moved by Mr. Eldon, seconded by Mr. Dobbie, and carried, that whereas, there is throughout the Province a very low degree of proficiency in the art of Drawing among the pupils in both the High and Public schools; and whereas, it is desirable that steps should be taken to remedy this defect; be it resolved that in the opinion of this (Com.) Section of the O.E.A., the present course in Drawing for Public Schools is not well adapted for inducing pupils to think and observe for themselves, and that the Education Department should be asked to provide another course better suited to that end. And further, be it resolved that this Section memorialize the Public School Department to secure not only their co-operation to secure a better course than the present one, but that they use their influence to secure the filling up of the present books so long as we have them, according to the directions laid down therein, that is to say, without the use of rulers, compasses, or other mechanical aids.

Messrs. Dobbie and Black were appointed a committee to draw up a resolution regarding the subject of Drawing, to be sent to the Secretary of the Public School Department for discussion before that Department.

Moved by Mr. Wismer, seconded by Mr. Grant, that a special effort be made to have a somewhat full report of Mr. Dobbie's paper published in some of the Toronto papers, especially the *Globe* and *Mail*. Carried.

The thanks of the Association were tendered to Mr. Dobbie for his excellent paper.

A committee, composed of Messrs. Dobbie, Black and Eldon, was appointed to bring in a resolution regarding the Diploma course.

Meeting adjourned at 4.45 p.m.

Wednesday, April 5th, 1899.

The meeting was called to order at 2 p.m. by the President.

The minutes of the sessions on the previous day were taken as read.

The report of the Committee on Commercial Course was presented by Mr. Dobbie, and taken up clause by clause.

Moved by Mr. Wismer, seconded by Mr. Dickenson, that clause 2 should be amended to read, "That the course should extend over two years." Carried.

Moved by Mr. Dobbie, seconded by Mr. Wismer, that clause 3 be amended to read, "That there be an examination at the end of the first year on the subjects 1, 3, 4, 5, 8; and one at the end of the second year on each of the subjects," etc. Carried.

Moved by Mr. Kilmer, seconded by Mr. Wismer, that clause 5 be amended to read, "That a text-book on business forms and usages be authorized."

Moved by Mr. Wismer, seconded by Mr. Kilmer, that clause 6 be struck out. Carried.

Moved by Mr. Dobbie, seconded by Mr. Wismer, that the report as amended be adopted. Carried.

EDUCATION DEPARTMENT IRRARY JAN 31 1901 ONTARIO.

The report as adopted reads as follows: Whereas, in the opinion of the Commercial Section of the Ontario Educational Association, it is desirable that there should be provided in our High schools and Collegiate Institutes a thorough training in all the branches of an English and Commercial Education; be it resolved that it is the opinion of the members of the Commercial Section that in case any change should be made in the regulations relating to Commercial work in High schools and Collegiate Institutes, it is desirable that the course should be defined somewhat in accordance with the following recommendations:

I. That the Commercial course include the following subjects: 1. Book-keeping. 2. Business forms and usages. 3. Commercial Arithmetic: (*a*) Mechanical operations; (*b*) Problems. 4. Business Correspondence, Writing and Spelling. 5. English Composition. 6. English Literature. 7. Commercial Geography. 8. Reading. 9. Stenography. 10. Typewriting.

II. That the course extend over two years.

III. That there be an examination at the end of the first year on the subjects in I., 1, 3, 4, 5, 8; and one at the end of the second year on each of the subjects, and that at this latter examination a diploma be granted on the first eight subjects, and that any candidate passing also in the last two subjects be granted a diploma with Stenography at 60 (or 80 or 100) words per minute, and Typewriting at the rate of 30 words per minute.

IV. That the examination on Stenography test for three rates of speed 60, 80, 100 words per minute respectively. That if Typewriting be also mentioned in a diploma a rate of 30 words per minute be required to be certified by the teacher or to be tested by examination.

V. That a book on "Business Forms and Commercial Law" be

authorized, and that the paper on "Business Forms and Usages" be based on this test.

VI. That honors (67 per cent.) be granted. That the Book-keeping sets be graded 1, 2, 3, 4, with reference to form, neatness and writing; that no one be granted honors whose books are not graded 1 or 2; and that no one be granted a diploma whose books are graded 4.

VII. That the Business Correspondence include letters, telegrams, advertisements, etc. That the Spelling include not only ordinary words, but Commercial terms, and Canadian, British and American geographical names. And that the writing be tested from dictation, as well as from books as described in VI.

VIII. That any candidate who has passed the Junior Leaving, or any equivalent examination, shall be allowed the subjects in which he has passed.

Mr. Dickenson, of London, followed with his paper on "Writing."

Discussion on this paper was postponed till after the Association had heard Mr. Johnson's paper on "Checks."

The thanks of the Association were tendered to Mr. Johnson and Mr. Dickenson for their able papers.

Moved, seconded, and carried, that all papers read before the Association be printed.

The meeting adjourned to meet on Thursday morning.

THURSDAY, APRIL 6TH, 1899.

The meeting was opened at 10.10 a.m, the President in the chair.

The minutes of the preceding session were taken as read.

Mr. E. C. Kilmer, of Stratford, was called on and read his paper on "The Place of Geography in a Commercial Course."

The discussion on the paper on "Writing" of the previous day was then taken up. Messrs. Kilmer, Young and Newlands took part.

The following officers were elected for the coming year:

President - -	W. J. Dobbie, B.A., Guelph.
Vice-President -	W. Ward, Kingston.
Secretary-Treasurer	J. Black, Chatham.
Councillors - -	R. H. Eldon, Toronto; E. C. Kilmer, Stratford; J. A. Dickenson, London; G. W. Johnson, Toronto; D. Young, Guelph; J. Wismer, Toronto.

The meeting adjourned at 11.45.

MINUTES OF PUBLIC SCHOOL DEPARTMENT.

TUESDAY, APRIL 4TH, 1899.

This Department was called together in the Drill Hall of the Normal School at ten o'clock a.m., the Chairman, Mr. A. H. Musgrove, of Wingham, presiding.

Mr. J. A. Hill, Ph.D., of Toronto, read a portion of Scripture and engaged in prayer.

The President appointed Mr. John R. Brown, of Napanee, Minute Secretary, and Mr. Charles G. Fraser, of Toronto, press reporter.

On motion of Mr. W. J. Hendry, of Toronto, seconded by Mr. Ed. Ward, of Collingwood, the minutes, as printed in the published Proceedings of 1898, were adopted.

Mr. J. W. Rogers read the Treasurer's report, showing the receipts to be $91.85 and expenditures $92.70 ; balance due Treasurer, 85c. The Treasurer recommended that the offices of Treasurer and Secretary be amalgamated. After some remarks by Messrs. McAllister and Young, it was moved by Mr. Hendry, seconded by Mr. Ward, and adopted, that the report be received and referred to the auditors.

Mr. Geo. M. Ritchie read the Secretary's report,* outlining the work done in preparing the programme for this meeting and referring to the difficulty in getting returns from County Association secretaries.

On motion of Messrs. Hendry and Hill, the report was adopted.

Mr. E. Ward, Principal Collingwood Model School, read an able paper on "The Relation of the Public School Course to Language and to Grammar." Mr. Osborne, the Chairman and others took part in the discussion that followed. (See papers of Public School Department.)

Mr. George M. Ritchie, Toronto, gave a lucid and interesting account of the Dominion Teachers' Association meeting, held at Halifax, N.S., in 1898. Some apt extracts from the Proceedings of the Association and descriptive sketches of scenery, etc., added very much to the value of the paper. (See papers of Public School Department.)

The meeting adjourned until 2 p.m.

* A copy will be found at the end of the Minutes.

Afternoon Session.

A joint meeting of the Kindergarten, Training, Inspectors and Public School Departments was held in the Normal School Drill Hall at 2 p.m., with Mr. A. H. Musgrove, Chairman of the Public School Department, presiding.

J. A. McLellan, M.A., LL.D., Principal Ontario Normal College, addressed the meeting on "The Image and its Functions in Education." The address was well received.

Miss Mary Adair, Philadelphia Normal School, prepared an excellent paper on the question, "Does the Educational Agency which we call the School, adequately meet and answer the demand of social progress for the forming and fostering of the Individual?" In her unavoidable absence the paper was read by Miss M. E. Macintyre, Directress of the Kindergarten Department, Toronto Normal School.

Chairman Musgrove announced that the unveiling of the portrait of the late Principal Kirkland would take place at eight o'clock in the evening in the theatre of the Education Department.

Mr. J. Coyle Brown, P.S.I., Peterboro', moved and Mr. J. H. Knight, P.S.I., East Victoria, seconded, that the present Board of Directors of the Ontario Educational Association be a committee and associated with the Hon. the Minister of Education, to consider the propriety of recommending a change of name in the case of c, g, h, q, w, y, z, oo, au, aw, ou, ow, oi, oy, ch, ck, gh, ph, qu, sh, tch, th and wh, so as to make the name of each correspond with its function, or main function, as the case may be.

In amendment, it was moved by Mr. E. T. Young, of Hamilton, seconded by Mr. L. T. Lochheed, M.A., of Toronto, that all after the word "change" be struck out and the following substituted, "so harmonizing and correcting the elemental sounds of the language and the corresponding visual signs as to make our language thoroughly phonic." After a lively discussion in which Messrs. Kirk, McAllister, Reazin, Knowles and others took part, the motion was carried.

The meeting adjourned at five o'clock.

Wednesday, April 5th, 1899.

A joint meeting of the Inspectors', Public School, Training, and High School and College Departments was held in the Public Hall at nine o'clock a.m., Mr. R. A. Thompson, M.A., Hamilton, Chairman of the High School and College Department, presiding.

The subject, "Should Arithmetic and Grammar be Restored to the Junior Leaving Examinations?" was discussed by Messrs. Manley, Scott, Wallis, Chancellor Burwash, Embree, Campbell, Taylor, McDougall, Robertson, Burke, and others. A resolution was carried to the effect that the requirements and standards in Arithmetic and Grammar for teachers' certificates should be higher than for University Matriculation examinations.

The Public School Department then resumed in the Drill Hall, Chairman Musgrove presiding. He gave an able and instructive address, which, on motion of Messrs. McAllister and Brown, was ordered to be printed in the minutes of the General Association. (See papers of Public School Department.)

Mr. W. F. Moore, Dundas, introduced the discussion of the question "Should English History be taught in our Public Schools?" At the close of his address he moved, seconded by Mr. Plews, Wallaceburg, that the text-book on History be remodelled, and the subjects treated in English History be the Great Epochs. The resolution was referred to the Committee on Resolutions. (See Resolution No. 15.)

Mr. R. N. Shortill, Ayr, led in the discussion of the subject "The Public School Leaving Examination should be a Two-year Course."

The reading of Mr. Rowe's paper on "The Newspaper in School" was postponed till a later session.

The election of officers for 1899-1900 was then proceeded with, and resulted as follows:

President - - -	Mr. Geo. M. Ritchie, Toronto.
Vice-President - -	Miss Cummings, Woodstock.
Director - - -	Mr. E. T. Young, Hamilton.
Secretary - - -	Mr. John R. Brown, Napanee.
Treasurer - - -	Mr. Chas. G. Fraser, Toronto.
Executive Committee	Mr. J. S. Hamilton, Cobourg; Mr. Ed. Ward, Collingwood; Mr. T. R. Earngey, Georgetown.

The meeting then adjourned until 2 p.m.

Afternoon Session.

A joint meeting of the Public School, Inspectors, Training and Kindergarten Departments was held in the Drill Hall at 2 p.m., Mr. H. D. Johnson, P.S.I., Chairman of the Inspectors Department, presiding.

Mr. John Dearness, P.S.I., East Middlesex, read a very valuable paper on the "Academic Qualifications of the Public School Teacher." In closing he moved, seconded by Mr. John R. Brown, that in the opinion of the Public School, Training, Inspectors and Kindergarten Departments the present standard of the academic qualification of Public School teachers is inadequate, and, to a less extent, unsuited to their work; therefore no time should be lost in specializing the so-called non-professional course of study of intending Public School teachers so far as such specialization is compatible with a sound education, and in revising the test of such study so as to exclude persons from being licensed to teach subjects which they have not learned; and that a committee consisting of the presiding officers of these sections be appointed to have this opinion respectfully pressed upon the attention of the Minister of Education. After some discussion the resolution was carried.

The Hon. Dr. Ross, being present, delivered a brief but inspiring address.

The joint meeting then adjourned, and the Public School Department resumed with Chairman Musgrove presiding.

Mr. W. J. Chisholm, M.A., Paisley, read a very thoughtful paper on the subject, "Are our Public Schools Training Good Citizens?" (See papers of Public School Department.)

Mr. W. Houston, M.A., Toronto, gave an excellent address on "Civics."

Moved by Mr. Suddaby, seconded by Mr. Knowles, that hereafter no examination in History be required for High School entrance, this step to be taken with the view of having better teaching done in this subject. After some discussion by Messrs. Kirk, Knight, McAllister and Ward, the motion was carried. (See Resolution No. 14.)

Mr. Ritchie, Secretary, announced that over 400 members of the Association were in attendance, and that return railway tickets would be secured free upon surrender of standard railway certificates.

On motion of Messrs. McAllister and Husband, Messrs. Ritchie, Brown, S. Y. Taylor, and the mover and seconder, were appointed a Committee on Resolutions, to report at the afternoon meeting on Thursday.

The meeting then adjourned.

THURSDAY, APRIL 6TH, 1899.

Mr. Musgrove, the Chairman, took the chair at 9.30 a.m., and called upon Mr. Chas. G. Fraser, who opened the meeting with prayer.

The minutes of the previous sessions were read and approved.

Mr. S. J. A. Boyd, Belfast, read a valuable paper on "The Influence and Professional Spirit of Public School Teachers."

Mr. Jas. S. Rowe, Markdale, read an excellent paper on "The Newspaper in School."

Mr. E. W. Bruce, Toronto, read a well-prepared paper on "The Elevation of the Teacher's Status."

Mr. R. K. Row, Vice-Principal Toronto Normal School, gave an interesting and valuable address on "The Speer Method in Arithmetic," for which he received a hearty vote of thanks. (For all these see papers of Public School Department.)

Mr. Ferrier, Principal Mimico Industrial School, extended a cordial invitation to the teachers to visit his institution in the evening.

In the temporary absence of the Chairman, Mr. E. W. Bruce, M.A., Director, occupied the chair.

Mr. T. Y. Shine, Alliston, read an able paper on "The Study of Geography."

Mr. J. W. Milne, Odessa, read an excellent paper on "The Teaching of Drawing." (See papers of Public School Department.)

The meeting then adjourned until 2 p.m.

AFTERNOON SESSION.

Chairman Musgrove called the meeting to order at 2 p.m. This session was devoted to a discussion of the resolutions passed last year, and the reports of the Committees on Resolutions. Those reaffirmed or adopted appear in the appended copy of circular letter.

Votes of thanks were passed to those who took part in the programme, and to the retiring officers.

The usual allowances to the Secretary and reporters were ordered to be paid.

The meeting was then closed.

JOHN R. BROWN,

Secretary.

SECRETARY'S REPORT.

The work of the Secretary for the year 1898-99 varied somewhat from that of former years. Our worthy President conceived the idea of gathering in many teachers throughout the Province to take a more active interest in the doings of the Association. To this end the Secretary sent out several reply post cards to each member of the Executive, to be by them sent to teachers whom they knew to be capable of reading papers on different subjects. These reply cards were returned to the Secretary, and at the November meeting of the Committee selections were made from those who were willing to read, and our present excellent programme is the result. Many copies (about 1,500) of resolutions were sent to about sixteen conventions during the year, but replies were only received from a very few. A committee had met the Minister of Education in reference to resolutions, with some good results, but not as much as could be wished. The registration of members is not financially favorable to the Public School Department, and a change should be made. Many who consider themselves members of this Department, have not paid the special fee, and the consequence is the Treasurer reports a small deficit. Still, the number of members "in good standing" increases from year to year. Very little trouble was experienced in getting the minutes and papers of this Department into the printer's hands, and the lateness of the report was not due to us. I had the privilege of attending the meeting of the Dominion Teachers' Association, at Halifax, last August, as representative of this Department, an account of which will be found amongst the papers read before this Department.

In retiring from the position this year, I wish to express the pleasure I have had during my two years' incumbency of making the acquaintance of so many fellow-teachers, on paper at least.

The remuneration for the office, given by this Department, together with that given by the General Association to each Secretary, I have invested in a gold watch, which I shall always consider as given me by this Department, and shall prize it more for that reason.

GEO. M. RITCHIE.

Resolutions passed by Public School Department.

Napanee, 18th April, 1899.

The following resolutions were passed by the Public School Department at the meeting of the Ontario Educational Association during Easter vacation, April 4th, 5th and 6th, 1899.

They are intended for consideration by each County Teachers' Institute. The results of the deliberations are respectfully solicited. Any opinions received will be presented at the next meeting of the Ontario Educational Association.

Jno. R. Brown,
Secretary P.S. Department, O.E.A.

Address: Napanee, Ont.

---

1. That no certificate to teach be granted to any person under twenty-one years of age.

2. That it is a matter of regret that the Minister has abolished the granting of Specialists' certificates (Non-professional) to all but those obtaining the degree of B.A.

3. That the Public School Department of the Ontario Educational Association desires to thank the Minister of Education for the appointment of a Public School teacher to the Educational Council, but would urge that representation, in justice to Public School interests, should be increased to at least three members.

4. That we would respectfully urge that in future appointments under the control of the Education Department, Public School teachers receive that proportion of representation to which they are in justice entitled.

5. That the Board of Examiners for the Entrance and Public School Leaving examinations should consist of teachers actually engaged in Entrance and Public School Leaving work and teaching in the Public or Separate schools in the Inspectorate.

6. That the Training Term in the Model School be extended to one year.

7. That the graduates of the School of Pedagogy, who have not been trained at a Model or Normal School, should not be permitted to teach in the Public schools.

8. That it is a matter of regret that the Minister of Education has made Latin a compulsory subject for Junior and Senior Leaving certificates, and that he be requested to restore the options as they have existed heretofore.

9. That the qualification for inspectors' certificates be first-class certificates of five years' standing and the degree of Bachelor of Pedagogy from Toronto University, with an experience qualification of at least ten years' teaching, five of which shall have been spent in Public School work, so as to cover the teaching of all the grades.

10. That the basis of apportionment of Legislative grant be dependent upon the following:

(*a*) Building and equipments.

(*b*) Average attendance.

(*c*) Amount of salary paid to teachers.

11. That the Public School Leaving course be essentially what its name implies, and that if it be a year's course, the work be curtailed; but if a two years' course, the present curriculum be fairly distributed over the two years.

12. That the following changes should be made with respect to the Leaving examinations:

(*a*) The course in Geography should be reduced, leaving that subject to be continued in Form II. of the High School course.

(*b*) The course in History should be limited to fixed periods of British History.

13. That the work in Entrance History be all of Canadian History and a period of British History taken from the beginning of the Tudor period to the present time.

14. That hereafter no examination in History be required for High School Entrance, this step to be taken with the view of having better teaching done in this subject.

15. That the text-book on History be remodelled and the subjects treated in English History be the Great Epochs.

16. That the Hon. the Minister of Education be requested to arrange for a four years' course of Literature selections from the Fourth Reader for the Entrance examination, so as to have the selections of one year different from those of another.

17. That the annual meetings of County Teachers' Institutes be held during two consecutive days, of which Saturday be not one.

18. That the incoming Executive Committee be requested to arrange a joint meeting of the Inspectors', Training and Public School Departments as a Committee on Resolutions, such meeting to be not later than the second day of next session.

19. That a permanent committee (the Executive Committee) be appointed from this Department to bring clearly before the Local Associations of the Province the importance of a good attendance of the Public School teachers at this Association.

20. That each Local Association be urged to send at least one duly accredited representative each year, and we would further recommend that if two are sent, that not both of these delegates be changed in each succeeding year.

21. That it be a request to the County Associations to forward to the Minister of Education, to their representatives in the Legislature, and to the Secretary of this Department, copies of all such resolutions of a general character as may be passed at their meetings.

22. That this Association communicate by circular with County Teachers' Associations to urge upon them to appoint a committee to interview the local member of the Legislature to represent our claims for a fair representation on the Educational Council, using every effort to secure from him a promise of action at the next meeting of the Legislature.

23. That the Public School Department at the next session be transformed into a Parliament during the forenoon of each day to discuss live educational questions; also that the Secretary be instructed to have the above resolutions printed and distributed in pamphlet form to all Public School teachers throughout the Province through the secretaries of the Local Associations.

MINUTES OF KINDERGARTEN DEPARTMENT.

TUESDAY, APRIL 4TH, 1899.

The first session of the Kindergarten Department opened with Miss Macintyre in the chair. Between sixty and seventy were in attendance.

The minutes of the '98 meeting were read and adopted.

Miss Macintyre explained regarding the Committee appointed to arrange a post-graduate course, that considerable correspondence had been carried on, but as the Committee had been unable to meet, a proper discussion of the subject had been impossible. She suggested that the Committee meet before Wednesday's session, so that their report might be presented to the Association at that time, which was agreed to be done.

Miss Agnes E. Mackenzie called attention to the necessity for a new standard of admission to Kindergarten training classes.

Present regulations require a primary certificate or three years' attendance at a High School, but the abolition of the primary examination will leave the standing required, "three years' attendance at a High School." After some discussion by the members, Miss Mackenzie gave notice of motion regarding the standard of admission to Kindergarten training classes and the limiting of assistants' certificates.

The President gave an address in which she urged further use of the Mother-Play book, and gave some suggestions on the practical work of the first year students.

Professor Hume, of the University of Toronto, followed with a very suggestive paper, "How to Think," for which he received a hearty vote of thanks, after which the session adjourned.

Wednesday, April 5th, 1899.

After the reading and adoption of the minutes of Tuesday's meeting, it was moved by Miss Currie, seconded by Miss Morris that Professor Hume's paper be printed. Carried.

Moved by Miss Agnes E. Mackenzie, seconded by Miss Warner, (1) that a definite time limit (two years) be adopted for assistants' certificates; (2) that a second-class certificate, or its equivalent, be necessary for entrance into a Kindergarten training class; and (3) that the minimum age of admission be eighteen years.

This was adopted, point by point, and a committee, consisting of Misses Mackenzie, Warner and Macintyre, was appointed to bring the recommendation of the Association before the Minister of Education.

Regarding a post-graduate course, the Committee reported that they had met, but the subject had not been fully considered, and no decision had been reached. After discussion, in which Mrs. Hughes, Misses Mackenzie, Macintyre, Currie and Warner took part, it was moved by Miss Mackenzie, seconded by Miss Morris, that in the meantime, instead of a post-graduate course, an extension course of reading be proposed (three years' course); that last year's committee be retained; and that the Minister of Education be consulted in the matter. Carried. (The Committee consists of Misses Currie, Macintyre, Agnes E. Mackenzie, Savage, Loveck, Bolton, Lucy P. Mackenzie, and Mrs. Hughes. Miss Macintyre is Convener.)

Miss Stocking gave a paper on "The Evolution of Froebel's Principles," an historical outline of educational practice from the time of Plato to the Renaissance, and was followed by Miss Anning on "Practical Problems in Public Kindergartens." Miss Anning presented some of the problems faced in a charitable Kindergarten in Belleville.

The election of officers then took place:

President	- - -	Miss Agnes E. Mackenzie.
Director	- - -	Miss Mary Macintyre.
Secretary	- - -	Miss Jean R. Laidlaw.

A vote of thanks was tendered the retiring officers.

THURSDAY, APRIL 6TH, 1899.

After routine business it was moved by Miss Currie, seconded by Miss Morris, that the Association ask the Minister of Education to require that all children beginning school life should have the benefit of Kindergarten training, where kindergartens are established as part of the school system. Considerable discussion followed the motion. It was generally agreed that while it is optional to send a child to the Kindergarten or to the Primary School, many of those most in need of Kindergarten training will be, as they are now, sent to the school through the ignorance of the parent, but an effective method of removing the competition was not clear. Mrs. Shepherd moved, seconded by Miss Stocking, that the matter lie over until next year, members in the meantime considering what legislation can be recommended as effective. Carried.

The first year training was then considered. Miss Mackenzie gave a synopsis of the theoretical training, Miss Warner dealt with the occupations, and Miss Laidlaw spoke on drawing, color, and Kindergarten environment.

More freehand drawing and freehand cutting were advocated in the discussion that followed before the Department adjourned.

JEAN R. LAIDLAW,
Secretary.

MINUTES OF THE TRAINING DEPARTMENT.

TUESDAY, APRIL 4TH, 1899.

The Training Department of the Ontario Educational Association met at 10.15 a.m. in Principal Scott's room.

Principal Scott, of Toronto Normal School, the Chairman of the Department, presided, and read an excellent paper on "The Progress made by Teachers during the Past Decade" for his opening address.

The minutes of last year were taken as printed.

Instead of appointing a press reporter it was moved by Mr. Elliott, B.A., seconded by Mr. Murray, that a short extract of the papers read before this Department be handed to the Secretary by those who read them. Carried.

Moved by Mr. Suddaby, seconded by Mr. Shantz, B.A., that Dr. McCabe and Messrs. Lough, Elliott and Scott be a committee to prepare an address of condolence on the death of the late Principal Kirkland and to present the same to Mrs. Kirkland, and that a copy of said address be entered in the minutes of this Department. Carried.

Under the head, Reports of Committees, Principal Scott, as convener of a committee on "Educational Values of Subjects," reported little progress, and suggested that the Committee be discharged. The matter was left in abeyance.

Mr. McDiarmid, of Ingersoll, whose name appeared on the programme, was unable to be present owing to illness.

Mr. Lough, of Clinton, gave an able criticism of "The Difficulties Experienced by Model School Masters."

Discussion followed by Messrs. Campbell, Rannie, Shantz, Scovell, Elliott, Tilley, and Groves.

Moved by Mr. Campbell, seconded by Mr. Shantz, that Messrs. Elliott, Shantz and Lough be a committee to report on Thursday morning *re* some needed changes in the Model School Curriculum. Carried.

On motion the meeting then adjourned.

WEDNESDAY, APRIL 5TH, 1899.

The Training Department met at 10.45 a.m., Principal Scott, B.A., presiding.

Before the regular programme was taken up, it was moved by Mr. J. J. Tilley, seconded by Mr. Suddaby, that the Committee on

Model School Resolutions be not limited to what has or will be said, but that said Committee be permitted to bring before this Department resolutions on other topics that the members see fit, and that the name of Mr. Jordan be added to the Committee. Carried.

Mr. W. E. Groves, of Toronto, then read a paper on "The Model Schools: Make Them more Practical."

Discussions followed by Messrs. Shantz, Jordan, Wilkinson and Alexander.

Moved by Mr. Campbell, seconded by Mr. Tilley, that the papers of Messrs. Lough, Groves and Scott be handed to the Printing Committee for publication. Carried.

Moved by Mr. Jordan, seconded by Mr. Wilkinson, that hereafter the papers read before this Department be referred to a committee of three, said committee to decide upon their publication in the Proceedings, and that the Chairman name the Committee. Carried.

Messrs. Suddaby, Lough, and Wilson were named as the Committee.

The election of officers which followed resulted as follows:

Chairman - - -	Mr. N. M. Campbell, St. Thomas.
Director - - - -	Mr. J. Suddaby, Berlin.
Sec.-Treas. - - -	Mr. Wm. Wilson, Toronto Junction.

Mr. S. B. Sinclair, M.A., Ottawa, led in a discussion on "Are too many Professional Certificates being Granted in Ontario, and, if so, What is the Remedy?"

On motion the meeting then adjourned.

Thursday, April 6th, 1899.

The Training Department of the Ontario Educational Association resumed work at 9.15 a.m, Principal Scott presiding.

The minutes of the two previous days were read and confirmed.

The Committee on Resolutions reported as follows:

(*a*) Resolved that, as the time for training students is, at present, altogether inadequate for satisfactory results, the Model School term should be lengthened. Carried.

(*b*) Resolved that the work of the County Model schools, the Normal schools and the Normal College be the training of candidates for second-class, first-class and High School teachers' certificates respectively. Lost.

(*c*) To the end that there may be uniformity in the examination of the written papers of the students in the County Model schools,

be it resolved that the Minister of Education be requested to so amend the Regulations to the effect that these papers be examined at the Education Department by a committee composed of Public School inspectors, Model School masters and Normal School masters. Carried.

Mr. D. K. Clark, of Woodstock, read an excellent paper on "Manual Training."

Mr. A. B. Shantz, B.A., of Caledonia Model School, read a paper on "Some Needed Changes in the Policy of our Training Schools."

Mr. J. C. Morgan, of Barrie, addressed the meeting on "Pressing Needs and Defects in our System as seen by a Model School Candidate."

Discussion followed by Messrs. Barber, Shantz, Jordan, Reid and Suddaby.

Mr. W. H. Elliott, B.A., of Hamilton, on behalf of a committee appointed to bring in a resolution on the death of the late Principal Kirkland, reported as follows:

"We, the members of the Training Department of the Ontario Educational Association, desire to place on record our sense of the deep loss we have sustained in the death of the late Thomas Kirkland, M.A., which occurred on December 31st, 1898.

"Mr. Kirkland entered the teaching profession in Ontario forty-five years ago, and his studiousness, his untiring zeal in the work of the class-room and its consequent success were rewarded by rapid advancement from an assistancy in a small village school to one of the most responsible and honorable positions in the gift of the Department of Education.

"He was a man of broad sympathy, and, in consequence, was always to be found identified with the various agencies whose object was the advancement of the interests of Education. As a member of the Educational Council and of the University Senate, he assisted in formulating the courses of study in our High and Public schools, and his long connection with the Educational Association tended to widen and deepen the teacher's conception of his work, and to confirm that paternal feeling which to-day characterizes the various branches of our educational system.

"It was, indeed, an appropriate recognition of his generous and kindly disposition, his ripe scholarship and strong, executive ability, that he was unanimously elected, a year ago, to the presidency of this Association.

"Few men have studied more earnestly the problem of Educa-

tion, and few, indeed, possessed a higher or nobler ideal of the teacher's function or strove more faithfully for its realization.

"In his death this Department, of which he was the first chairman, has lost an energetic worker, the teaching profession an excellent councillor, and the city and province a citizen whose life has ever been an example of personal probity and far-reaching helpfulness."

On motion, Mr. J. J. Tilley was appointed to prepare a syllabus on the sequence of lessons for use amongst Model School students.

The Convention of 1899 was then declared closed.

WM. WILSON, *Secretary.*

MINUTES OF THE INSPECTORS' DEPARTMENT.

TUESDAY, APRIL 4TH, 1899.

Promptly at 10 a.m., in the Library Room, Education Department, Toronto, the President of the Department, Mr. H. D. Johnson opened the Department by calling on Inspector Brebner to lead in prayer.

The minutes of last session, as printed in the Proceedings, were taken as read and were approved.

Reporting for the press was left with the Secretary.

The President, Mr. H. D. Johnson, thanked the Inspectors present for the honor conferred on him in placing him in the chair.

A message was read from Mr. Reazin, stating that he could not reach the city until twelve o'clock. A committee consisting of Messrs. Dearness and Brebner was appointed to arrange a time for the subject to be taken by Mr. Reazin.

Mr. Knight gave notice of motion *re* the book on birds by C. W. Nash, with a view of having the book furnished free, in quantities to Inspectors, for distribution among the schools.

Inspector Wm. Irwin, of Perth, a new member, was introduced to the Department.

On motion of Mr. Knight, seconded by Mr. Michell, Mr. Dearness, Dr. Kelly, Mr. Clendening and the mover were appointed to prepare suitable resolutions of condolence with the families of the late Mr. W. Alexander, of Perth, and Mr. Benj. Freer, of Haliburton, who have been removed by death since our last meeting.

Mr. Knight, of Lindsay, introduced the subject, "Uniform Promotion Examinations," dealing with their importance. His paper contained some valuable suggestions. Dr. McDiarmid, Maxville, followed on the same subject, explaining the plan of conducting these examinations in his own county. A lively discussion followed, in which Dr. Kelly, Messrs. Barnes, Clendening, McKee, Wm. Johnston, Brebner, Smith and Rev. W. H. G. Colles took part.

Inspector Colles moved, seconded by Inspector Barnes, that it is desirable that the promotion examination papers in the Public schools of the Province should be as nearly uniform as possible; that these papers be so set that Inspectors can have a choice of questions on each subject for their own schools; and that Inspectors W. S. Clendening, Dr. Kelly, Arthur Brown, W. Prendergast, B.A., and the mover be a committee to prepare a set of uniform promotion examination papers for the current year, and furnish a copy to each Inspector.

After a lengthy discussion and several suggested modifications in the wording and scope of this resolution, action on it was deferred.

Meeting adjourned.

WEDNESDAY, APRIL 5TH, 1899.

The Department was called to order at 10.30 a.m., by the President, H. D. Johnson. Rev. Mr. Grant led in prayer.

Minutes of last session read and confirmed.

On motion, it was ordered that the subject to be introduced by Mr. Reazin be taken at 11.20 a.m., Thursday.

Mr. Morgan introduced the subject, "The New Regulations as to Lectures by Inspectors," in a free talk on the difficulties in the way of any attempt at carrying out the regulations in rural sections. Mr. Summerby followed, giving some useful hints on "How Best to Attempt to Carry out the Regulations." In the discussion which followed, Dr. McDiarmid, Rev. Geo. Grant, Messrs. Deacon, Dearness, W. Johnston, N. W. Campbell, Robb, Platt and Smith took part.

Moved by Mr. Platt, seconded by Mr. N. W. Campbell, that the subject be left with a committee to be nominated by the chair, and that the Committee be asked to report to this Department at 3 p.m to-day. Carried.

Messrs. J. H. Smith, W. Johnston, Platt, Robb and Dr. McDiarmid were named as a committee to act as directed by above resolution.

The following were elected as the officers of this Department for the ensuing year:

Chairman	- - -	Dr. W. E. Tilley.
Secretary	- - -	J. Coyle Brown.
Director	- - -	W. S. Clendening.

Mr. N. W. Campbell referred to Model School examinations, but no action was taken thereon.

Meeting adjourned to assemble in joint meeting at 2 p.m., and to return to the Library Room at 3 p.m.

Joint meeting in the Drill Hall opened at 2.10 p.m., Mr. H. D. Johnson in the chair.

Inspector Dearness read a carefully prepared paper on "Academic Qualifications of the Public School Teacher." At the close of his paper Mr. Dearness moved the following resolution, which was seconded by Mr. W. Scott, B.A.: That the present standard of the academic qualification of Public School teachers is inadequate, and to a less extent unsuited to their work, therefore no time should be lost in specializing the so-called non-professional course of study of intending Public School teachers so far as such specialization is compatible with sound education, and in revising the tests of such study so as to exclude persons from being licensed to teach subjects which they have not learned; and that a committee consisting of the presiding officers of these sections be appointed to have this opinion respectfully pressed upon the attention of the Honorable the Minister of Education.

After a short discussion the Hon. Dr. Ross, Minister of Education, addressed the meeting. The motion was then put to the meeting and adopted.

At three o'clock the Inspectors' Section withdrew from the joint meeting and re-assembled in the Library Room.

Mr. S. Phillip, the recently appointed Inspector of Haliburton, was introduced to the Department by Mr. J. C. Brown, of Peterboro'.

Mr. Robb presented the following report of the Committee on the New Regulations as to Lectures by Inspectors:

Your Committee beg leave to report that while we fully agree with the spirit of the recent instructions of the Minister of Education respecting lectures by Inspectors, we are of the opinion that the delivery of an annual lecture in each school section in addition to other duties is impracticable for obvious reasons; and your Committee would suggest such modifications should be made as

would leave the matter more to the discretion of Inspectors, recommending them to utilize the frequent gatherings of parents and school supporters, public examinations, institutes, etc., for that purpose, and that conferences with trustees be held as frequently as the condition of the schools require.

[Signed] G. D. PLATT, *Chairman.*
D. ROBB.
D. MCDIARMID, M.D.
WM. JOHNSTON.

After a lengthy discussion by Dr. McDiarmid, Messrs. Reazin. Odell, Day, Fotheringham, Smith, Brebner, Carlyle, Colles, Johnston, Dr. Wordsworth and some remarks by Dr. Ross, the resolution was adopted.

Moved by Mr. Fotheringham, seconded by Mr. Brown, that in view of the serious, enormous destruction of fruits, grains and woods of Ontario by insects, small rodents and other pests, we, the Inspectors of the Province in convention assembled, after full consideration, beg to direct the attention of the Education Department to the immense economical advantage that would be secured by the diffusion of exact knowledge of the birds, reptiles and insects that act as checks and help to preserve the balance of life and service between the friends and foes of agriculture in the animal kingdom,

Resolved that a suitable handbook after the style of Mr. C. W. Nash's "Birds of Ontario," published this year by the Department of Agriculture, should be provided; that colored plates of a suitable size for school walls, showing the principal birds and insects that should be protected and multiplied, or, on the other hand, should be kept down or exterminated, ought to be prepared; that among other Friday afternoon exercises, this study should receive careful attention. After a short discussion the motion was adopted.

Meeting adjourned.

THURSDAY, APRIL 6TH, 1899.

Department called to order, 9.15 a.m., Mr. H. D. Johnson in the chair. Inspector Knight led in prayer.

Moved by Mr. Knight, seconded by Mr. Chapman, that the Public School Inspectors' Department of the Ontario Educational Association beg to express its profound regret at the removal by death of William Alexander, who was for many years Inspector of Schools for the County of Perth, and Benjamin Freer, lately In-

spector of Haliburton; and the Inspectors present herewith extend to their widows and families their heartfelt sympathy, and pray that He who is the Friend of the friendless may be to them the Father of the fatherless, and the God of the widow. Adopted unanimously.

The subject, "Should a Diploma, a Grant, both or neither, be given for Excellence of Premises and Supplies?" was introduced by Inspector T. A. Craig in a carefully prepared paper.

After a full discussion by Inspectors Johnston, Dearness, Wordsworth, Robb and Clendening, Mr. Dearness moved, seconded by Mr. T. A. Craig, that (1) this Department heartily approves of the principle of making a grant to school sections fully complying with the regulations of the Education Department; (2) that we recommend the revision of the regulations in a few minor particulars, at least so far as they relate to schools already built, *e.g.*, the minimum distance of the school-house from the highway, the separation of the entrances to the school-room, and the construction of separate cloak-rooms. Carried.

Moved by Rev. W. H. G. Colles, seconded by Mr. N. W. Campbell, that the most efficient condition of the schools and premises could best be attained by making the legislative grant payable to trustees on their certificate to the Inspector that the suggestions in his report to the trustees have been carried out. Lost.

Inspector Odell, Cobourg, introduced the subject, "Forms for Reporting to Trustees on (1) Premises and Supplies, (2) Management and Efficiency." His paper contained many useful hints and suggestions. Messrs. Platt, Smith, Campbell, Robb, Knight and Dr. Wordsworth took part in the discussion which followed.

Dr. Kelly, Brantford, read an able and scholarly paper on "Knowledge, and How to make the Children Love it."

On motion of Mr. J. J. Craig, seconded by Mr. Brebner, a hearty vote of thanks was tendered to Dr. Kelly for his excellent paper.

Mr. Chester Ferrier, Principal of the Victoria Industrial School at Mimico, extended a cordial invitation to the members of the Inspectors' Department to visit the school this afternoon or evening to witness the special exercises in connection with the installation of an electric light plant.

Inspector Reazin read a thoughtful paper on "The Relation of the Public to the High Schools so far as the Public School Leaving Examinations are Concerned," dealing with the Public School side of

the question. In the discussion which followed, Messrs. Platt, Summerby, Brebner, Prendergast, Robb and Chapman took part.

Mr. Lockhead was granted permission to address the Department.

Meeting adjourned.

THURSDAY AFTERNOON.

The session opened at two o'clock, Mr. H. D. Johnson in the chair.

The discussion on Mr. Odell's paper was continued, Messrs. Clendening, Platt, Colles, Barnes, H. D. Johnson and Knight taking part.

Moved by Mr. Platt, seconded by Mr. Michell, that the matter of Forms be left with a committee composed of Inspectors Odell, H. D. Johnson, and the mover. The motion was adopted.

Mr. W. Johnston read an able paper on "How to Increase the Attendance at the Annual Meetings of the Department." He was followed by Mr. W. Carlyle on "How to Make our Department More Efficient and Helpful."

On motion, it was ordered that all papers read in this Department be printed in the Proceedings.

Moved by Dr. Tilley, seconded by J. C. Brown, that the question of new Readers, with the new style of type as suggested by Mr. Lockhead, be left with a committee composed of Messrs. Dearness, Barnes and H. D. Johnson, to report at our next annual meeting, or to take action in the meantime as the Committee may think best.

Votes of thanks were unanimously presented to the retiring officers for efficient service during the year.

The Department was then declared closed.

H. D. JOHNSON, *Chairman.*
W. E. TILLEY, *Secretary.*

MINUTES OF THE TRUSTEES' DEPARTMENT.

TUESDAY, APRIL 4TH, 1899.

The thirteenth annual convention of the Public and High School Trustees of Ontario began in the Examiners' Room, Education Department, at 3.30 p.m.

After the registration of delegates, the President, Judge John Creasor, took the chair.

Mr. Leitch, of Brantford, and Mr. Elliott, of Kingston, were appointed to report to the press the daily proceedings.

The minutes of the proceedings of this Department, 12th, 13th and 14th April, 1898, as printed in pamphlets, were taken as read, and upon motion of Mr. John Anderson, of Arthur, seconded by Mr. Robert McKnight, of Owen Sound, were adopted.

Judge A. Bell, of Chatham, and Mr. John Anderson, of Arthur, were appointed auditors.

The following report of the Treasurer was read, received, and referred to the auditors:

TREASURER'S REPORT, TRUSTEES' ASSOCIATION, 1898-99.

The receipts of the Treasury of the Trustees' Association, 1898-99, have been :

Balance from audit of 13th April, 1898	$35 08
Fees paid by delegates, 1898	88 50
Portion of legislative grant to Ontario Educational Association	49 85
	$173 43

EXPENDITURE.

Fees paid to Ontario Educational Association	$29 50
Printing pamphlets and circulars	48 50
Distribution of pamphlets, circulars and letters	17 24
Allowance to Secretary-Treasurer	40 00
Balance on hand	38 19
	$173 43

GEO. ANSON AYLESWORTH,
Treasurer Trustees' Association.

TORONTO, 4th April, 1899.

The Secretary read the following report:

SECRETARY'S REPORT, TRUSTEES' ASSOCIATION, 1898-99.

At the meeting of the Board of Management of the Ontario Educational Association, held just after the adjournment of the Convention of 1898, an invitation was extended to the departments comprising the said Association, to send each a delegate to the next meeting of the Dominion Educational Association, which was to be held in Halifax sometime about midsummer. At the said Halifax convention, the 23rd day of May in each year was set apart to be specially devoted to patriotic exercises in all the schools throughout the Dominion.

In May the Proceedings of the Trustees' Department were printed, and copies were distributed to the members attending our last convention, and to others. In October, circulars were distributed asking suggestions for the programme to be discussed at this convention. In November the President and Secretary of this department met with the other directors of the Ontario Educational Association in this place. The action of the Board of Management, 14th April, 1898, in voting to this department one-twelfth of the annual legislative grant of $600 to the Ontario Educational Association, to enable us to print and distribute our pamphlets and circulars, was referred for confirmation, or otherwise, to the General Association at the Wednesday evening public meeting of this convention. In January circulars were sent to all the County Councils of the Province, inviting them to send here representatives of the rural Public schools. There is gratifying evidence of an increased interest in the proceedings of this Association, awakened in the minds of county councillors. The demand for the pamphlet copies of our "Proceedings, 1898," printed in May last, proved so great that a second edition of 300 copies became necessary, and was printed in February. Early in March the distribution of pamphlets, programmes and circulars among the School Boards of Ontario was attended to, so far as the limits of our means permitted.

GEO. ANSON AYLESWORTH,
Secretary Trustees' Association.

TORONTO, April 4th, 1899.

On motion of Col. James Deacon, Lindsay, and J. R. Rutherford, M.D., Aurora, the report of the Secretary was received and adopted.

The President, Judge John Creasor, Owen Sound, referred to the loss sustained by the Ontario Educational Association, in the sudden death of the President, the late Professor Kirkland, a portrait of whom would be publicly unveiled at the Tuesday evening meeting of the General Association.

At the recent session of the Legislature certain matters relating to education had come up, which ought to be considered by this Association.

The Convention proceeded to the discussion of the following four topics, suggested in the address of the Minister of Education to the trustees, April, 1898. (Proceedings, pp. 16, 17):

(*a*) "The payment of trustees who visit the school at the times of the Inspector's official visits."

(*b*) "Should Inspectors be required to report in person to the Board of Trustees after each official visit to the school?"

(*c*) "Should Inspectors be required to deliver public lectures to the ratepayers?"

(*d*) "Would it be well to revive periodical public examinations in connection with the schools?"

Mr. John Anderson, of Arthur, thought there ought to be more frequent inspection of schools; and by abler Inspectors. Private reports, not to be seen by any of the teachers, should be made to the Trustee Boards by the High School Inspectors.

Mr. Fairbairne, Bowmanville, was opposed to the paying of trustees,—better men can be got without pay. The Inspectors ought to take the trustees into their confidence; the people also, who pay for all, should know what the Inspector finds at the school.

Judge A. Bell said: "Inspectors have much power for good. We at Chatham have always found the High School Inspectors willing to counsel with the Board. Were Inspectors' visits heralded a holiday appearance would be donned by the school. Public meetings, as of old, should be held, and addressed by the Inspector."

Mr. McKenzie, St. Thomas, approved of the plan of the Inspector giving to the Board a private report about the teachers.

Mr. E. B. Smith said the Ailsa Craig Public School Board had sent him to this convention with instructions on each of these four topics: (*a*) Trustees should not be paid money, for it would appeal

to the small-potato men, who are always after the dollar. Inspectors can do better work examining the school in the absence of the trustees. (*b*) For the Inspector always to make a personal report to the trustees would take too much time; besides, it would be difficult to get the trustees together. If the Inspector reports good things of the school, the report should be published; if bad, it should be brought privately to the teacher's notice. (*c*) Public meetings, to be addressed by the Inspector, ought not to be attempted too often; once in two or three years might be about right. (*d*) Public examinations are a delusion and a snare.

Colonel Deacon, Lindsay, said the great object was to interest the parents and the public generally in school matters.

Dr. Robertson, of Milton, pointed out the great difficulty of getting the trustees together during school hours, or immediately after, in the rural school sections.

Mr. Christie, Ontario County Council, said much good would come of it if Inspectors would meet and talk with rural school trustees about school matters at any time.

Dr. J. W. Wood, Victoria County Council, said that how to improve rural Public schools was the most important question of all.

Mr. Kidd, Ottawa, pointed out the difficulty of making one regulation apply to Inspectors in towns and cities and in rural districts. After some further debate the following resolutions were adopted:

(*a*) Moved by Rev. W. A. Cook, B.A., Thorold, and J. G. Elliott, Kingston, that this Association cannot support the proposition to pay trustees.

(*b*) Moved by Rev. J. Hay, B.A., B.D., Cobourg, and Rev. Mr. Cook, that the High School Inspector when on a visit of inspection be required to cause the chairman or secretary of the High School to be informed of his arrival, so that a personal interview with the Inspector may be obtained, if desirable.

That the Public School Inspector in the same way notify the town or village board of his visit.

At a later session of the Convention it was moved by Mr. Thomas Stewart, Lindsay, and Mr. J. B. Fairbairne, Bowmanville, That when desired by any Board of Rural Public School Trustees, it should be the duty of the Public School Inspector of that school to report in person to the Board of Trustees at or soon after each official visit;

And, in the opinion of this Trustees' Association, Public School Inspectors should report in person, wherever practicable, to the rural School Board at or soon after each official visit.

(*c*) Moved by Mr. John Anderson, Arthur, and Rev. Mr. Cook, that it be in the option of the Trustees to ask the Inspector to deliver public lectures to the ratepayers; and that Inspectors should hold themselves in readiness to comply with any such invitation.

(*d*) Moved by Mr. E. B. Smith, Ailsa Craig, and Mr. J. H. Burritt, B.A., Pembroke, that it would not be well to revive periodical public examinations in connection with the schools.

On motion of Mr. Robert McKnight, County Council representative of rural Public schools of Grey, and Col. James Deacon, Lindsay, the President of this Trustees' Association was authorized officially to subscribe the following memorial:

To the Honorable the Minister of Militia and Defence, Ottawa:

The memorial of the Provincial Association of School Trustees of Ontario

Humbly sheweth that the militia regulations provide for the formation of cadet corps in connection with Collegiate Institutes and High Schools; and for equipping them with the requisite outfit of arms and accoutrements.

That the report of the Hon. the Minister of Education shows that already fourteen Institutes and High Schools in this province have availed themselves of the opportunity thus afforded them to introduce into their work a desirable course of military training; and some seven hundred intelligent youths are now being instructed in conformity with the prescribed syllabus.

That your memorialists believe that if the corps thus organized, and to be hereafter organized, were uniformed, a greater interest would be taken by them in their drill, and that it would render the good work more complete and satisfactory.

Your memorialists therefore pray that you cause to be issued free of charge out of the Militia Stores Department suitable uniform to the cadet corps now organized, and to be hereafter organized.

And your memorialists will ever pray.

Signed on behalf of the Provincial Association of Public and High School Trustees, Ontario. PRESIDENT.

The Convention adjourned for the day.

WEDNESDAY, APRIL 5th, 1899.

The Convention reassembled at 9 a.m., the President in the chair.

The auditors, Judge A. Bell and Mr. John Anderson, reported that they had examined the receipts and disbursements of the Treasurer for the year 1898-99 in detail, and found the same correct with the vouchers therefor. They drew the attention of this department to the fact that the General Association recognized the justice of the Trustees' claim to participate in a share of the government grant to them, and paid this department $50.00. On motion, the Auditors' report was received and adopted.

The following were elected officers for 1899-1900:

President - - -	S. W. Brown, L.D.S., Dunnville.
First Vice-President -	George Y. Chown, B.A., Kingston.
Second Vice-President -	John A. Leitch, Brantford.
Secretary-Treasurer -	Geo. Anson Aylesworth, Newburgh, Addington County.

After the above-named officers had been elected by ballot, a committee consisting of Messrs. Burritt, Bell and Brown, was appointed to nominate the Executive Committee. The Committee made the following nominations, which were confirmed by the Association:

EXECUTIVE COMMITTEE.—His Honor, Judge John A. Ardagh, B.A., Barrie; Mr. John Sheahan, Newark (Oxford County Council); Mr. John Anderson, Arthur; Rev. J. Hay, B.A., B.D., Cobourg; J. W. Wood, M.D., Kirkfield (Victoria County Council); Mr. W. J. Kidd, B.A., Ottawa; A. McLay, M.D., Woodstock; Mr. A. Werner, Elmira.

In addition to the above-named officers and elected members, the Executive Committee includes, *ex-officio*, ex-Presidents Farewell, Bell, Somerville, McCracken, McRobbie, Lazier, Dow, Jackson, Burritt, Colonel Deacon and Judge Creasor.

Mr. James H. Burritt, B.A., Pembroke, convener of the Committee appointed at the Convention of 1898 (p. 11) to consider the motion introduced by Dr. Brown, of Dunnville, reported that "the Committee concur in the principle of the said motion."

Whereupon it was moved by S. W. Brown, L.D.S., Dunnville, seconded by Mr. Thomas Stewart, Lindsay:

"Whereas, it is provided by sections 30 and 31 of the High School Act, that the Municipal Council of every county shall con-

tribute towards the maintenance of High schools in unseparated towns and in villages and townships within such county in the proportions therein set forth. And whereas, under the provisions of the said Act the said towns, villages and townships are obliged to provide for the maintenance of such High schools such an amount in excess of the amount contributed by the municipal councils of the counties as shall be necessary to maintain such schools.

"And whereas such towns, villages and townships are also required to provide the buildings required for the purposes of such High Schools. And whereas by the Municipal Act it is provided that such towns, villages and townships shall be assessed by the municipal councils of the counties within which they lie, amongst other things, for the maintenance of the High schools within their limits, thereby contributing towards the amount which they, the said municipal councils of such counties, are required by law to contribute towards the maintenance of High schools for the purpose of educating pupils outside of the limits of such towns, villages and townships.

"Be it, therefore, and it is hereby resolved that the provisions of the said High School Act and Municipal Act work an injustice to the said towns, villages and townships.

"And it is further resolved that the Local Legislature of Ontario be memorialized so to amend the said Statutes that the cause of such injustice may be removed, and that High School districts be exempt from paying any part of the amount of the county appropriations over and above the amount equal to the amount of the government grant."

The motion was opposed by Mr. John Sheahan, Oxford, on the ground that it would unduly favor the High School towns, and throw the burden too heavily upon the townships and villages that lacked such privileges; and by Mr. Aylesworth, Lennox and Addington, because the great advantage to the people of the locality of the High School in not needing to send their young people away from home at a critical age, outweighed in other respects as well as in actual expense the amount paid into the county rate for High School purposes.

Mr. Fairbairne, Bowmanville, argued that the localities unaided furnished buildings and accommodations for the High School, which was burdensome to the locality, while serving the interests of the county at large.

Mr. Dow, Whitby, said the High School Act of 1891 embodied the results of the Trustees' Association's labors. Is the underlying principle right? Then we ought not to let ourselves be deterred by difficulties of detail. He referred to the Trustees' Minutes of Proceedings, 1895 (pp. 2 and 3), when the principle involved in this motion was affirmed; namely, that the county should provide the whole cost of educating county pupils, and the locality of the resident pupils; albeit some who then supported it were now opposing.

Mr. Werner, Elmira, and Mr. McKenzie, St. Thomas, continued the debate, the latter arguing that it would be best not to disturb the present High School law.

Mr. McKnight, Grey County, thought that local advantages of the trade, board, etc., of the county pupils, more than met the locality s loss complained of—their share of the county school rate. He moved, seconded by Mr. R. H. Jupp, Simcoe County, that in the opinion of this Association it is not expedient that any change be made in the present law relating to the maintenance of county pupils in High Schools and Collegiate Institutes.

This motion was ruled out of order as being merely the negative of the motion under discussion.

Mr. E. B. Smith rejoiced that Ailsa Craig had not yet built a High School. The local people give value for the money they receive for the board, trade, etc., of county pupils County Councils are too anxious to cut down educational grants.

Mr. Jupp, Simcoe, opposed any change. He considered the school law now sufficiently well tangled.

Mr. Thomas Stewart, Lindsay, said the Victoria County Council in its dealings with Lindsay Collegiate Institute, had always been most liberal and advanced; they recognized the injustice of the present condition of things. The original cost of buildings and equipment overbalances local benefits. The High School locality taxes itself to provide educational buildings for the use of the county rent free. Non-resident pupils (outside the county) are charged double fees, which in many cases seems a hardship.

Mr. I. J. Gould, Uxbridge, hoped to see provided some redress for non-resident pupils. Our High schools should all be National schools.

Col. I. E. York remarked that Waterford charged in fees the full sum of $36 a year to non-resident pupils.

Mr. Charles Meighen, Perth, thought towns were often over-

ambitious in putting up too expensive buildings. He considered it better not to change the present law.

Dr. Brown closed the debate. All that his resolution asked was that the county should pay the cost of educating the pupils it sent to the High School.

The resolution was voted upon, and carried by a narrow majority.

It was moved by Mr. Farewell, and Mr. Peter Christie, Ontario County, that in the opinion of this High and Public School Trustees' Department of the Ontario Educational Association, it is expedient that the study of Classics and Modern Languages other than English, should be discontinued in one-third or one-fourth of the High schools of this province, and that manual training and instruction in the use of tools and implements and instruction in the subjects having a practical relation to Agriculture, Mechanics, Manufacturing and Mining should be substituted therefor.

After this motion had been briefly discussed by Messrs. Chown, Smith, Warner, Elliott, and the Rev. Mr. Cook, it was moved by Mr. Hugh McMillan, Guelph, and Mr. E. C. Pearson, Weston, and resolved, that this Department extend to Mr. Farewell a hearty vote of thanks for the excellent paper which has just been under discussion; and that the Printing Committee not only incorporate it in the minutes of proceedings of this Department, but that it have as full a report in the newspapers as can be secured.

Mr. John Ball Dow, of Whitby, seconded by Rev. W. A. Cook, Thorold, moved that Mr. Farewell's paper on "The Elision of the Study of Languages from one-fourth or one-third of our High Schools, and the Substitution of Manual Training and Instruction in the Use of Tools and Implements," and his motion in connection therewith, be referred to a special committee to be nominated by the President, with power to procure information from Boards of Education generally throughout the Province, and from any other sources, and to report to the next convention of this Association a scheme for carrying into effect the views contained in his paper. Carried.

The President nominated the following special committee: Mr. Farewell, Q.C., etc., Whitby; Mr. G. Y. Chown, B.A., Kingston, and Mr. A. Werner, Elmira.

Mr. S. W. Brown, Dunnville, presented a paper on "The Greater Care of the Teeth of School Children."

On motion of Colonel Deacon and Major Farewell, Dr. Brown's paper was received with thanks, and ordered to be printed in the Proceedings.

Mr. Charles Meighen, Perth, gave notice of motion to be introduced at the next annual convention of the Trustees' Association.

NOTICE OF MOTION.

That in the opinion of this Association truant officers would be more efficient in the discharge of their duties if sub-sections 1 and 3 of section 7 of the Truancy Act were amended in the following manner:

7—(1) By striking out the words, "Police Commissioners, or in cases where there are no Police Commissioners, the Municipal Council," and inserting in their stead the words, "Board of School Trustees or Board of Education."

7—(3) By striking out the words, "Board of Police Commissioners, or any Municipal Council, or Board of Trustees," and inserting in their stead the words, "Board of School Trustees or Board of Education."

WEDNESDAY, APRIL 5TH.

The Trustees' Department reassembled, the President in the chair.

The President reported that the Executive Committee nominated Col. James Deacon as Director for the year 1899-1900, from this Department to the Board of Directors, Ontario Educational Association.

On motion, the report of the Executive Committee was received and adopted.

Moved by Mr. Burritt, seconded by Mr. Stewart, and resolved that the notice of motion (Proceedings, 1898, p. 20.), "That the Public and High School Trustees' Department of the Ontario Educational Association be separated from the said Association, and that henceforth this said Department form an independent association as formerly, to be known as 'The Provincial Association of Public and High School Trustees of Ontario'; and that all the steps necessary and proper to the accomplishment of this end be taken," stand over till the next annual convention, in view of the General Association's action to be taken to-night.

Mr. John A. Leitch, chairman of the Public School Board, Brantford, read a paper on "Uniformity in Public School Promotion Examination Papers throughout the Province."

Moved by Messrs. E. B. Smith and Colonel Deacon, and resolved, that the paper read by Mr. John A. Leitch be received with thanks, and printed in the Proceedings of this Association; and that it be

referred for consideration to the next annual meeting of this Association.

The Hon. G. W. Ross, LL.D., etc., Minister of Education, Ontario, entered the Convention, and was invited to a seat beside the President.

At the conclusion of the discussion in progress when he entered the room, the hon. gentleman addressed the Convention. He said he came to show his respect for, and his appreciation of, the Trustees' Association. Our school system is not the work of one man, but of the best minds of the country. It is always easy to theorize; but after all the coat that fits is the best; those regulations are the best that are best administered. He had a few problems, to a solution of which the Trustees' Association might help him.

"First Problem—Under the High School Act, cities and towns, separate from counties for municipal purposes, receive maintenance-money from the counties, while they contribute nothing to the county rates. This unfairness to the High schools situate within the county for all purposes might be remedied in either of two ways—which would you prefer?—

"1. All High School districts might be exempted from contributing to the county rates so far as those county rates are raised for and applied to the *maintenance* of High schools. But the High schools are mostly situated in towns; if the towns are exempted, will not the townships object? Possibly the farmer might not approve of the proposal to tax him, and let the townsman go free.

"2. Or might it be a better plan to fix an average assessment of High School districts, and compel all to pay a uniform county rate based upon the said average?

"Second Problem—Of what utility is that power of appointment of High School Trustees now vested in County Councils? Has the county any interest that the Trustee can protect? Shall we drop the County Council Trustee?

"Third Problem—The present law requires non-resident pupils to pay the fee set by the High School Trustees. In the case of a High School situated on the border of another county, this seems to work a hardship upon pupils living near. Shall pupils be considered *County* pupils of their nearest High School irrespective of county boundaries? Or shall pupils residing within three miles of a High School be regarded as *County* pupils of that school? On the other hand, County Councils do not like to pay for pupils living outside their counties.

"I would like to have your opinions.

"It is now the rule that Inspectors must deliver a public lecture in every school within their inspectorates, once a year. Do *you* think that worth while? We want the *people* to learn more about their own schools.

"High School Inspectors are required to hold conferences with Trustee Boards."

At the conclusion of his address the hon. gentleman retired from the Convention; and the problems were directed to be placed upon the programme for discussion at the Convention of 1900.

Notice of motion (Proceedings, 1898, p. 22.): "That in the opinion of this Trustees' Association the present High School Entrance examination should be done away with; and that it should be necessary for all pupils, hereafter, to pass the Public School Leaving examination before entering a High School." His Honor, Judge Ardagh, Simcoe County.

In the absence of Judge Ardagh, this notice of motion was directed to be placed upon the programme for the next annual convention.

Mr. I. J. Gould, Uxbridge, gave notice that at the next annual meeting of this Association he will move that it is inadvisable that members of County Boards of Examiners should examine the papers of their own pupils; and that the members of the said Boards should be selected from persons who are in no way connected with the teaching staff of the different High Schools or Collegiate Institutes of the County for which they are appointed.

At the suggestion of a number of delegates several Public School Inspectors who were present, were requested by the President to address the Convention.

Mr. David Robb, Public School Inspector, Huron County, said Inspectors are, and have been, very anxious to meet with the ratepayers and trustees of rural districts. The great difficulty is the indifference of ratepayers. The trustees, as a rule, stand in awe of the ratepayers, and the ratepayers demand cheapness.

Mr. Wm. Carlyle, P.S.I., Oxford County, said the Trustees worked with him, and, as a rule, met him at the schools. But previously-made engagements cannot always be kept. Trustees usually pay very little attention to printed circulars or pamphlets.

Mr. Henry Reazin, P.S.I., Victoria County, said: "I am in sympathy with the regulation requiring Inspectors to meet with the Trustees and the people; but I find no little difficulty in carrying it out."

Mr. J. J. Craig, B.A., P.S.I., Wellington County, briefly addressed the meeting; till the time fixed for the discussion of the next topic upon the programme, having arrived, the Convention turned its attention to the subject, "Does the Public School Course Comprise too many Subjects? If so, What Subjects Should be Omitted?"

Mr. John Ball Dow, B.A., Whitby, in the absence of Mr. Farewell, introduced this topic. He read from the Regulations the list of subjects now upon the Public School curriculum, and expressed the opinion that not one of them ought to be omitted.

Mr. Smith, Ailsa Craig, said that some subjects which were taught in a perfunctory manner, might better be omitted. There are several subjects that ought to be embodied in the Readers, and taught indirectly.

It was agreed unanimously that the Public School course does not comprise too many subjects.

Mr. George Anson Aylesworth (Lennox and Addington County) read a paper on "The Uniting of Rural Public Schools; and the Conveyance of Pupils to and from School at the Public Expense."

At the conclusion of the reading of the foregoing paper, it was

Moved by Geo. Anson Aylesworth, seconded by Mr. E. B. Smith, Ailsa Craig, that this Trustees' Association, composed of delegates from School Boards and representatives of rural Public schools appointed by the County Councils of the Province of Ontario, strongly recommend that throughout the townships and villages of the Province, rural school sections unite wherever practicable, and that Boards of Trustees in charge of such united schools, provide, at the public expense, adequate daily conveyance to and from the school buildings for the pupils residing in their several districts.

The foregoing resolution was carried unanimously.

It was moved by Mr. J. E. Farewell, Q.C., etc., Whitby, and Mr. Peter Christie (Ontario County Council), that this Association thanks Mr. Geo. A. Aylesworth for his paper as to rural schools, and directs that the same be published in the Proceedings of this Association. Carried.

Mr. E. B. Smith, Ailsa Craig, gave notice that at the next annual meeting of this Association he would move that Model Schools should be abolished; and the Normal term extended so as to embrace an additional half-year's practical instruction in Kindergarten work.

Moved by Mr. John A. Leitch, Chairman Public School Board,

Brantford, and Mr. J. G. Elliott, Board of Education, Kingston, that the thanks of this Association be extended to our Secretary, Mr. Aylesworth, for his excellent services during the past year, and that he be paid an allowance of $40 for the same. Carried.

After the Secretary had thanked the Convention for its kindly appreciation of his efforts in its service, the President was requested to call Col. James Deacon to the chair, and it was moved by Mr. J. B. Dow, Whitby, and Mr. J. G. Elliott, Kingston, and unanimously resolved, that the cordial thanks of this Department be and are hereby tendered to His Honor, Judge Creasor, for his able and impartial discharge of the important duties of President of this Department.

In making this motion it was remarked by Mr. Dow that the best way to secure continuity and consistency in the work of this Trustees' Association was to introduce subjects by papers or resolutions, print and publish them to the School Boards and County Councils throughout the Province, and finally crystallize into resolutions the ripened results of deliberation.

After the President had appropriately responded to the vote of thanks, the Convention adjourned, Rev. William Walsh, Brampton, at the request of the President, pronouncing the benediction.

FINANCIAL STATEMENT

OF

THE ONTARIO EDUCATIONAL ASSOCIATION,

1898-99.

RECEIPTS:

Balance from last Statement	$177 37
Members' Fees	282 25
Ontario Government Annual Grant	600 00
Sale of Proceedings	126 03
Advertisements	30 00
	$1,215 65

EXPENDITURES:

Convention Expenses and Music	$33 50
Printing, Mailing, Postage—Trustees' Department, 1898	33 10
To cover cost of Printing, Mailing and Postage—Trustees' Department, 1899	50 00
Secretaries of Departments	36 00
General Secretary—Salary	100 00
Treasurer	20 00
Reporting Addresses, Evening Meetings	32 25
Printing, Publishing, and Mailing 1,800 Copies of Proceedings	503 33
Circulars, Post-Cards, Programmes, Tickets	95 85
Railway Fares, Board of Management, attending Meeting at Education Department in November	24 50
Postage, Cablegram and Exchange	12 60
Balance	274 52
	$1,215 65

ROBERT W. DOAN, *Secretary.*
W. J. HENDRY, *Treasurer.*

April 3rd, 1899.

Toronto, April 4th, 1899.

Your Committee of Auditors respectfully beg leave to report that they have examined the Treasurer's books and vouchers for the current year and have found them correct with a balance on hand of $274.52.

CHAS. A. BARNES,
S. B. SINCLAIR, } *Auditors.*

ADDRESSES AND PAPERS.

ONTARIO EDUCATIONAL ASSOCIATION.

ADDRESSES DELIVERED AT THE OPENING OF THE CONVENTION.

Mr. Parkinson said: Mr. President, Ladies and Gentlemen of the Ontario Educational Association,—In the name of the six hundred teachers of this Queen City, I extend to you, one and all, a hearty greeting. We tender you our hospitality, our good-will. Six hundred hands are ready, stretched out to grasp yours in hearty friendship; six hundred tongues unite in bidding you a warm welcome; six hundred loyal teachers' hearts go out to yours in truest sympathy, in deepest earnestness and good fellowship.

We are indeed rejoiced to see you; and our greetings are intended to be so warm as to cause you to feel that they come from every one of our fifty-six schools, from each of our six hundred classrooms, from all of the twenty-seven thousand boys and girls enrolled as our pupils; from this great city, and from every fireside within its borders.

May your sojourn be prolonged to the utmost. May you be so impressed with Toronto's hospitality; may you be so convinced of our desire for your comfort and happiness, that your departure will be accompanied by feelings of regret, tempered by the hope which is also entertained by us, that you may again be induced to honor us by your presence.

Mr. President, the place, the hour, and the man are well met in this convention. By the place I mean Toronto. It is the educational capital of Ontario, shall I say of Canada. The heart of the patriot teacher thrills at the name. College days are recalled,

college memories are awakened, college friendships are renewed; and, when hand again strikes to hand as in days of the by-gone, floods of remembrance pour over us, and heart again goes out to heart as when the soul of Jonathan was knit to the soul of David.

The story of the imperishable things in our educational history is recorded here. One bares the head, and walks softly in presence of them. He to whose feet these corridors echoed a year ago, has gone. No more his kind voice is heard, no more his friendly hand is stretched out in welcome. Thomas Kirkland has been gathered to his reward.

Greatest among these imperishable things is the memory awakened by the name of Ryerson, repeated by the noble monument that watches before this building in which we now sit, pledging for all time the brotherliness of Ontario's teachers in the name a people's devotion has given him—The Father of Ontario's Schools.

By the hour I mean the present.

> "We are living, we are dwelling
> In a grand and awful time,
> In an age on ages telling,
> To be living is sublime."

Never were the days fraught with more of destiny for Canada. Let us rejoice to-day that sectional lines are fast disappearing, that we are becoming a united people, in fact as well as in name.

Never in our history has the realization of the patriot's hope—a land unbroken by discord, a land untorn by sectional strife, undivided by difference of tongue or creed—been nearer to fruition. With a French-Canadian and a Roman Catholic placed in the seat of highest honor which an English-speaking and Protestant majority can confer, we have no Ontario, no Quebec; no French, no English; no Catholic, no Protestant; but a united people, one country, one flag, beneath whose glorious folds every citizen may be proud to stand in the presence of the whole world, and say,—"I am a Canadian."

By the man I mean the teacher. All honor to the men and women who toil in these our Public Schools. More than we can know does the personal touch of the teacher shape the life of the nation. The intelligence, the moral weight, the honesty, the purpose, and above all the patriotism of this Canada of ours is in your hands. That a nation's greatness lies, not in things, but in men, is a lesson all are slow to learn, but learn it we must and shall. A

nation's wealth consists, not alone in its broad domains, its boundless forests, its rich mines and its fertile soil, but in the intelligence and virtue of its citizens. Its brightest jewels are its men of sober thoughts and righteous deeds.

We form a part of a greater empire than has been. But to the Public School that empire must look for the men and women who, under God, are to guide the grand old ship of state through the beckoning seas of the future to a still more glorious destiny. As in the olden days, when the Imperial Eagle floated above, and looked down upon a consolidated empire, from Orient to Occident all roads led to Rome; so now, in the closing years of this nineteenth century, in this newer world of vaster extent, of more active life, of more varied interests, all roads lead to Great Britain. Whatever there is among other nations of thrift, of energy, of purpose, of culture, of progress, of worth, this Greater Britain gathers tribute of the harvest.

Why is it that Egypt, with her pyramids, those stony records of the dawn of history, which have looked down upon four hundred centuries of progress; Greece with her wondrous works of art, her marble Parthenon, and the golden splendor of her Athens; Rome, with the grandeur of her legions, and the majesty of her laws, dwindle into fragments of history when compared with the great and grand old Ocean Empire of which we are so justly proud! The answer lies in the ever-increasing intelligence, honesty and freedom of its people. With continued effort to increase these, to stimulate in the minds of the people a stronger desire for education, what marvellous progress may we not expect of the generations of the future!

And so, day by day, and hour by hour, your responsibilities, Educators of Canada, are broadening and deepening. To you falls the task of instilling in the future leaders, legislators, and governors of this country that honest patriotism which will lead them to be loyal to the principles of sound government, to be faithful to the demands of citizenship, to be honest in the discharge of social obligations, to be clean, pure, true. Fill every pupil in the school with this sentiment, and out from the school-room it will find its way up and down the land. The millionaire will learn it, and will administer his wealth as a patriot. The statesman will learn it, and will discharge his duties to his country as a patriot. Fatherhood will learn it, and will count it joy to be proved worthy of such a grand, such a holy task. Motherhood will learn it, and

will teach the lips that lisp their evening prayer to frame the word, "CANADA," with a holy and a fervent purpose, making of their country and of themselves a daily offering to their God. So the boyhood and the girlhood of to-day, which your faithful work is preparing for the greater tasks of to-morrow, will offer to the world the manhood and womanhood that makes the strength of nations; men and women in whose breasts shall be born such trust and faith that for them the watchword of their country shall be:

"But thou, my country, dream not, thou!
Wake, and behold how night is done,
How on thy breast, and o'er thy brow
Bursts the uprising sun!"

Dr. McLellan said: Ladies and gentlemen, I do not think that I can find fitting words to express my thought and feeling on this occasion. However, it is perhaps fitting that I should unveil this portrait and say a few words with regard to our friend. I have known him almost as long as Mr. Farewell, and perhaps more intimately. I had better opportunities of knowing what the man was intellectually, morally and spiritually than perhaps any other man in the country. In 1856 I had my first introduction to Thomas Kirkland. In 1858 our acquaintance began and ripened into a lasting friendship.

The last week in September, 1858, I went down to the University halls anxious to find out where I stood in the class lists. I met Mr. Kirkland there, who had passed the same examination. He had taken first-class honors in every department. I may say, I think—and this is about the best I can say—that so far as the class lists told anything he was close on the heels of our now distinguished friend, President Loudon. I remember, though I had not seen him for two years, how all his heart went out as he grasped my hand—I had managed to get through the examination pretty well—complimenting me on my success and expressing the wish that the course thus successfully begun might be continued till the end. When I had the pleasure of attending the University for a short time, in the third year of my course, Mr. Kirkland was attending at the same time. We became co-workers. Many and many an hour have I sat side by side with him solving problems that no other man in the University could solve, except Loudon himself. Old Cambridge papers were ransacked, and old papers of our own University for problems in

mathematics. And we did not confine ourselves to mathematics alone. There is no such thing as "a mere mathematician." We devoted some time to classics, and our lamented friend had just as acute a mind for classical niceties as he had for mathematical difficulties. I need not follow the long course of our friendship. Three or four days before he died I was in Toronto and the Minister of Education asked me to go in and see the closing exercises of the kindergarten. Mr. Kirkland made his way through the throng to grasp my hand, and it was just as warm and hearty a grasp as it had been more than forty years before. I may say that not a single shadow fell upon that friendship of forty years' duration. I know, therefore, something about his mind, and something about his character. He had an acute mind. I will not dwell upon the facts which illustrate this. He had a versatile mind, and he had a vigorous mind. I had every evidence of this in the work that he did. Now, to pass for a moment—and I will only take a few moments—to pass for a moment to his pedagogical ability. He was trained, as has been already said, in the Dublin Normal School. I saw Mr. Kirkland teaching almost every kind of work that the human intellect has to do with. I saw him in the Common School; I saw him in the highest work of the Grammar School; I saw him in the high academic work of the Normal School—for it was high work at that time—and in every case he was successful. Whether it was the literary and critical handling of an ode of Horace or the solution of a difficult mathematical equation, or the experimental investigation of a difficult chemical analysis, he was equally at home, and therefore I am justified in saying that he had a versatile mind. And I may tell you where his great success as a teacher lay—not so much in his acute mind, vigorous and versatility as that was, but in the broad, in the deep, sympathetic heart which accompanied the brain. He was a splendid illustration of what I call the artist-teacher, a happy union of brain power and heart power. I have seen him handling classes, little fellows who were struggling almost with their first ideas in given subjects. I have seen him dealing with adult minds whose early training had been neglected, and I have never in all my experience seen a teacher who was able to put himself so well into living contact with the struggling hearts and minds of his pupils. That was because of his own sympathetic heart. Richly endowed with this supreme qualification of the true teacher, he had almost a mystic insight into the workings of a student's mind; he seemed

to know just what the movement of images and ideas was and to adapt his suggestion and instruction to suit the needs of the struggling soul. This is the highest praise that can be bestowed on the true educator.

Now, I am sure that no one who knew Mr. Kirkland—(unveils portrait)—will say, that it is simply the biassed language of friendship, when I use the words :

> "His life was gentle
> And the elements so mixed in him
> That Nature might stand up and say to all the world,
> 'This was a man.'"

He has gone from us. The educator, the friend of teachers, the man, has gone from us. He rests from his labors. "Blessed are the dead which die in the Lord." We must all feel that in his departure was realized the sublime prayer of the poet, as I hope it will be in my case and yours :

> "Sunset and evening star,
> And one clear call for me !
> And may there be no moaning of the bar,
> When I put out to sea.
>
> "But such a tide as moving seems asleep,
> Too full for sound and foam,
> When that which drew from out the boundless deep
> Turns again home.
>
> "Twilight and evening bell
> And after that the dark !
> And may there be no sadness of farewell
> When I embark.
>
> "For though from out our bourne of Time and Place
> The flood may bear me far,
> I hope to see my Pilot face to face
> When I have crossed the bar."

Mayor Shaw said : Mr. President. I have to apologize for not being here a little earlier. We have had a long session of the Council, have been trying to defend ourselves against an attack on the reduction of our salaries—a pretty serious thing to all of us, which we successfully did, but I have not

had time to eat anything since early this morning, and if my remarks are brief, you will understand that I am not physically able to make a fitting address to this magnificent assembly. Many of the delegates no doubt received their professional training in the colleges and University of Toronto, and during those years of probation no doubt made many warm friends. These will already have cordially welcomed you. The old friendships will be renewed. This may be called an individual welcome. It is my privilege to extend you a collective welcome, that is, a welcome from the whole of the citizens of Toronto, and I do that with the very greatest of pleasure. Last year when I had the honor of appearing before you, you were pleased to accept an invitation to a drive. It is not the kind of weather that one would care much to drive about in, even in Toronto, yet I do not know exactly what else I can offer you in the way of entertainment or hospitality. The Council has said we are not to have any more luncheons, but I have got the Chairman of the Reception Committee here, and I have been trying to persuade him that we ought to give this delegation a good luncheon. Now, a nice luncheon would be a very good substitute for a drive—not that I care about lunching myself very much, but in good company a good luncheon is a very nice thing, and I hope the Chairman of the Reception Committee may be persuaded to do something in the way of a luncheon. I don't know. However, we are pleased to have you here, and I hope one thing you will not miss before you leave Toronto, even if we don't give you a luncheon, and that is to see our new municipal buildings. I want you to see those buildings, and I want you to see the architect too, a nice, keen-eyed, pleasant-faced fellow, who makes the contractors do their work well and thoroughly, and persuades the aldermen, and perhaps the public, too, that his views with regard to the expenditure up there are really a reflex of their own views. He makes us spend a great deal of money, and I want you to see the new building, and, after you have seen it, to know whether you are of my opinion, and I think you will be, that we ought to have a proper opening to such a building, not exactly a ball, but some sort of a ceremony, because I think that the erection of such a building marks the enterprise and the confidence that the citizens of Toronto have in the future of this great city. It is a magnificent building, and I may say that people who take no pride in their buildings do not cut much figure in history. The ancients seemed to know that very well, and

were continually constructing buildings of some kind—the Greeks with their Temples, the Romans with their Colosseums, and the Jews with their great Temple at Jerusalem. Then there are the Pyramids of Egypt, and near the Pyramids, as Kinglake says, "More wondrous and more awful than all else in the land of Egypt, there sits the lonely Sphynx." Now if you have not read Kinglake's "Eothen," I would recommend you to get it and read that brilliant rhapsody on the Sphynx. I mention these things —they are a little away from the question—to show you that if you want to live in after ages and want to have fine writing about our country, you have to build something, even if it is a monster and deformity like the Sphynx. We are proud of that building; go and see it. Now I hope your deliberations will not be like ours, noisy and stormy, but that your reports will be carried unanimously, and that your discussions on the various questions that are pertinent to your calling will be profitable and suggestive. I was going to suggest a subject for a paper, but I see all these newspaper men around me, and we are under newspaper government to some extent; at any rate I feel some hesitation. The subject I was going to suggest was the use of newspapers, and this line from Tennyson, "When was age so crammed with written lies?" but I do not think any professor would be equal to a paper of that kind. A public man might. The Honorable Mr. Ross, for instance, could read a very good paper on that question. I think I could read a good one myself. For I tell you when you find your wife with a newspaper in one hand, and the toasting-fork in the other, reading the meanest, nastiest things that it is possible for the meanest and nastiest newspapers to say—while the toast is burning and your breakfast is being spoiled—you will then be in a fit frame of mind to read a paper on the use of newspapers. Now, ladies and gentlemen, I extend to you a hearty welcome on behalf of the citizens of Toronto, and we will endeavor to do something that will show you, more than mere words, that you are cordially welcome to our city.

Principal Grant, of Kingston, said: I sometimes in my life have had liberties taken with me, but this is the greatest. I come in here quietly to enjoy the subjects advertised, and without a moment's notice I am dragged to the front to perform. I really cannot gather my wits at a moment's notice.

What greater responsibility could there be on human beings

than to know that to them is entrusted the task of forming opinion—for it is opinion which governs. I am afraid that if I get on to that great subject I would not leave much time for the other speakers, and so I must pass from it to thank the chairman for his kindness in permitting me to say a word as a brother workman, a member of the craft, to this convention. All my life I have been a schoolmaster, all my life I have been identified with educational work ; beginning as a tutor, earning my living in my teens as a teacher, putting myself through college by teaching, interested as a clergyman in every public school and high school teacher within the bounds of my congregations, laboring to get a university started in my native Province of Nova Scotia, refusing every offer to leave my position there for any other until I was called to take charge of Queen's University, and having for the last twenty-two years spent the happiest days of my life in connection with the work of pointing the youth over whom I am placed to high ideals of their duty to their country and their God and themselves; always, too, urging them to begin with themselves, for no better word was ever said than that of Shakespeare :

> "To thine own self be true,
> And then it follows as the night the day
> Thou canst not well be false to any man."

I have the profoundest sympathy with every member of the craft. I know the difficulties, but I know something of the inspirations and the joys of teaching. I must not encroach on your time, which has been parcelled out already among other speakers. Perhaps, on some other occasion, some other year, I may be invited and may be privileged to speak to you at greater length and with some little notice given to me beforehand. I shall to-night say only that if in any way I can further the work of education in this province I shall esteem it the greatest honor."

Hon. G. W. Ross, Minister of Education, said: Mr. Chairman, Ladies and Gentlemen,—One cannot help but feel that there is something like a strain of sadness running through the exercises of to-night. One feels as if the festive board was draped somewhat in black from the thoughts and recollections of the President of your choice last year, who has passed away so unexpectedly. I must add a word of testimony to his efficiency in a very responsible position during nearly the whole period of my administration

as Minister of Education. I must bear testimony to Mr. Kirkland's fidelity to duty—a fidelity, I believe, which characterizes the majority of the noble profession to which he belonged—a fidelity recognized by the warm friendship of thousands and thousands of his students—a fidelity that will be long remembered by those who received instruction at his hands, and who were cheered and comforted and stimulated by his example and by his devotion to the duties of his office. It was a sad loss to me as Minister; it was a sad loss to the profession; it was a sad loss to Ontario. It came unexpectedly; it was a shock. One feels like quoting the words of Mrs. Hemans, I think, when she said:

"Leaves have their time to fall,
And flowers to wither at the north wind's blast,
And stars to set; but all,
Thou hast all seasons for thine own, O Death!"

Just at the end of an active, successful session he was called away. We miss him, and his classes miss him. He has been replaced by his colleague, the vice-principal—a man who, we believe, by years of training, and by experience, and by a well-rounded character, will fill his position well. We were glad to be able to place our hands so readily upon a principal for the Normal School when Mr. Kirkland departed. Passing aside from this sad circumstance, one comes rather into the sunlight and what appears to be the beginning of a very successful meeting of the Ontario Educational Association. I thought, when I addressed you last year, that that was the largest meeting I ever attended, and I have been a member of the Association or attended its meetings for a great many years—I don't know how many. This seems to have eclipsed last year. I am delighted with the interest in this educational parliament of the teaching profession—this cosmopolitan parliament, a parliament elected without any bribery or corruption, I am sure, a parliament in some sense self-elected. I do not know that you are all sent; probably some of you came. You are welcome whether you came of your own accord or whether you were sent. It is only through great tribulation that we enter into some parliaments. You have entered without any tribulation into this. I hope you will enjoy it none the less. I have seen members of parliament who were very glad they got elected, and they thought everybody else was glad, who tried to make themselves believe that it was because of their wonderful endowments,

acquired or natural, that they achieved such great distinction. Sometimes they were alone in that happy and unexpressed opinion. Whether because of greatness having been thrust upon you, or whether you were born to greatness, you are here. We are glad you are here. I have great respect for parliament, perhaps far more than parliament has for me. I have great respect for the assembled wisdom of the people. If I were an old Saxon, I have no doubt I would obey the commands of the Witan, and be a willing, law-obedient subject of the heptarchy, such as it was. I hope to be a law-abiding citizen of any form of constitutional Government under which I live. You may not make laws for the profession in a certain sense, and yet unconsciously you legislate every year for the profession. You crystallize the best thoughts of your fellow-teachers. Sometimes, Mr. Chairman, you crystallize the thoughts of trustees, or you crystallize thoughts that trustees have never thought. In one case or the other you help to bring to a focus by throwing—I shall not say the fierce light, I shall rather say the clear light—the iridescent light of your experience, of your study, upon educational problems which could not be as satisfactorily solved were it not for your judgment. Perhaps your opinions are not as much respected in your own parish as you think they ought to be. A man is not without honor except among his own people and in his own country. At home they may call you a school-master, and gaze—

"And still they gazed, and still the wonder grew,
That one small head could carry all he knew."

That may be the local opinion about you. When you come here and sit in judgment with your fellowmen and come to certain conclusions in regard to public questions, rest assured of one thing: those conclusions are respected by the educators of Ontario, by the Education Department, by the head of that Department most necessarily, for he knows from many years of experience as a teacher, and from many years of experience as an inspector, how the practical man can solve problems that the theorist could not touch with tip of his finger. You are practical men, you are practical women, and in the worry and turmoil of your profession, and in the stress and strain, perhaps, of your daily labor, you come to conclusions with regard to curricula of studies, and in regard to solutions of every-day problems, which, perhaps, a Socrates could scarcely arrive at by any inductive process of reasoning.

"Tact sails into the harbor and out of the bay,
And carries the Senate spite of Webster or Clay."

And that tact the teacher possesses, and that tact he can communicate to others, and it is in the crystallized resolutions of his Association. We welcome you, then, not as the advanced guard but as the constitutional parliament of the teachers of the Province of Ontario, an educated parliament—can we say that of every parliament?—a self-respecting parliament, I trust a free parliament. You are no good if you are not a free parliament. No man legislates unless he can do so without fear, favor or affection. I know of nobody more free than the teachers. It is sometimes thought that he is under a species of thraldom—that some occult power, some hidden, unknown, evil-disposed genius presides over him in the quiet of his chamber, while he perambulates the highway from his boarding-house, where he lives on humble fare, almost as the Scotch student on a little oatmeal and sixpence a day, to his school-room, and dictates to him how he should think, what he should think, to whom he should express his thoughts, and how humbly and meekly he should comport himself in the presence of all the great educational authorities in the land. There is no such terrorism. The teacher is of all men the most free—if he can only get the trustees to endorse his cheque and pay him his salary, then he is free for a while, at least, at all events, free during the time he is spending it. But he ought to be free. We often speak to Normal School students, "If you try to teach like anybody else you will fail for certain; if you try to do anybody else's bidding you will do nobody's bidding well." You must have freedom of thought, freedom of action. If you have not had it to this moment, consider you have entered into the possession of that unspeakable liberty where each man, as they say of an Englishman, "can speak the thing he will," his own thoughts, with respect to the courtesy of his fellowmen. Don't do as they do in the City Council, as stated by the Mayor; don't say hard things of each other; don't say hard things of anybody, but let the truth be told. It is sometimes said that there is a little jealousy between the different departments of the profession. I do not believe it. Can it be possible that in a profession that represents the republic of letters—the greatest of all republics, the republic that is bounded by the civilization of this nineteenth century—is it possible that between one department and another of that great republic there should be any jealousy? I should hope not. The hierarchy of the profession may pretend to lead, or aspire to lead. They cannot lead if the other members of the profession respect themselves. The teachers

of Ontario are a unit; this meeting, perhaps, represents, as no other meeting at which I was ever present represents, the unity of the teaching profession. Our great universities are represented here—the University of Toronto by its President—we are honored by his presence; the University of Queen's by its Principal and its Head; Victoria University by its Chancellor. I do not know of the others, for I have not been able to cast my eye carefully around this audience. Was there ever a meeting of teachers in the Province of Ontario, held in the olden, golden days, when some of the older teachers and inspectors whom I see here attended, and who were my colleagues, assembled in this hall, two or three score of us, at which a university professor would condescend to be present, and at which those who represented the higher walks of the profession were willing and anxious to take an active part? Such a thing was not thought possible in those days. Not that they did not regard us with courtesy, for they would regard with courtesy any worker, no matter how humble; but we have grown to that position in this country when we regard with greater favor and greater interest every department of professional work, and the Public School teacher comes here to show the High School teacher what he doesn't know, and the High School teacher comes here to show the principal and professor of a university what he doesn't know, and the Kindergarten teacher comes here to show all of them some things they didn't know, and we learn from them and they from us, each helping the other, each glad to be able to help the other, not jealous because we receive less, not boastful because we give more, but rather glad because each as citizens of a common country, with a common purpose, knowing that we are all members of one great corporation, one corporate body, that is, Canada, are knit and jointed together for the one purpose of realizing the highest ideal of national intelligence and national character. That is what we are here for. I am glad, as Minister of Education, to give you my benediction, if that will do you any good. I am glad to fall upon such happy times. They say this nineteenth century is a wonderful century. So it is. Wonders will never cease. This is not a wonder, but it is one of the delightful features in Ontario that each one can sit under the same vine and fig tree, each claim to have planted it, each claim to enjoy its full shadow, to partake of all its fruit, remembering that we are brothers, kinsmen, and members of one body politic, and all interested in the prosperity of the same country. We welcome you then as a par-

liament, the parliament of a republic in which there is no dissension, a republic in which there is freedom of thought and freedom of utterance, and that has one purpose only, namely, the good of the whole.

And we welcome you again because you represent what I may call the highest ideals of national purpose. That is not exactly what I want to say—we do not always say what we want to say—what I want to get at is this: that in the formation of national character, in the development of national life, you fill the largest place perhaps of any profession in the country. Now I have got through this by some circumlocution. We remember the great Christianizing forces of our common Christianity when we speak of that which gives life and vitality to a nation. We know that that is the core and centre of all national life and thought and existence. We leave that aside for a moment. Next to that we come to the teacher, who stands nearer the national heart, nearer the great ganglionic centres of national life than anybody—I mean than any profession, not nearer than the mother—no, nobody can get nearer the child than the mother—God intended it to be so. "The hand that rocks the cradle rules the world." But the teacher gets nearer the child and nearer the formative influences that make a nation strong, that make a nation pure, that make a nation respectable and progressive, full of life and fire and vitality, that polarizes national life, than anybody else. The teacher gets nearer than anybody that point at which national vitality begins, and is projected upon such career as it may pursue. There is where you are, and you are here to-day to realize the responsibility of that position. Is there anything wrong in the State and we are not responsible for it? I do not think there is. Between you and the Ministers—I do not mean the Minister of Education—the responsibility rests. Take, for instance, something I always talk about—and you will say I have told you this before—take the want of zeal and interest in pure literature. Why isn't there more of it? You have not been unfaithful, have you? Perhaps not. You have done a great deal. Fifteen years ago we had 250,000 volumes in our libraries, last year two and one-half millions—an increase of tenfold in fifteen years. Last year we had 378 public libraries, an increase of 400 per cent.—a large increase, but not large enough. Are we pure-minded in our literary tastes? Still does there not flow through the land the pestiferous dime novel and the literature which was so current some years ago? The taste for that

which is pure in literature is a taste which begets refinement in every department of life and action and thought. The boy that reads a pure poem will not indulge in evil language—I mean if he loves the purity of poetry and literature his mouth will be cleansed from the use of foul language. It was Carlyle who said when he read some French novels he felt as if he would have to go and wash in the Jordan seven times, he was so impure. Give me the boy who will sit down and read a pure story, who delights in Tennyson's poems or Longfellow's poems or the works of any other good poet, who stores his memory with them, tunes his heart to the highest music of poetical genius, and I will give you a boy that will not talk much slang, any slang perhaps, and will not allow his mind to be filled with impure thoughts, and who will have the highest ideal of life, and to whom the sun will be bright and the stars will look down with a fresher radiance, and the flowers will smell more sweetly, and the sky, reddening in the early dawn, will be mellower than it has ever been before. I want that literature. Do that for me, ladies and gentlemen, as teachers, and you cannot leave a legacy for your country of which I will be prouder, which I believe will do more. The old sage said, "Let me make the songs of the people and I care not who makes their laws." Allow me to put into all the homes of Canada a dozen of the best books that have been written, whether in poetry or fiction or literature, and I care not for many of the temptations and passions which sweep over us like a whirlwind and too often carry us astray. There will be an anchorage that will hold many a frail bark safe and secure that otherwise might be swept over the rapids. You represent that—that ideal of purity of thought. You represent manliness of character. Is there any meanness in that boy and you have not won him out of it—I was going to say, knocked him out of it, but that would not do—out of which you have not exorcised that evil demon? My friend, Mr. Hughes and Mr. Scott called on me this morning with a long series of blanks indicating lines of child study. I shall see that some of these are circulated so that you will know the lines on which to base the philosophic study of the human child—that wonderful series of little convolutions wound up in a little cranium out of which such great thoughts come by and by. But what am I getting at? What I am getting at is this: Do you study each child individually? You do not; you study them in the mass. You cannot study them in the mass. Each is different from the other. Each has germs of weakness or

power which the other has not. If we are going to be successful teachers—I do not mean successful teachers, I want to get away from that thought—if we are going to be helpful in making good Canadians, study the child from the Canadian, from the citizen standpoint; do not think of him as a little lad set up on a form with a pen in his hand and a departmental examination paper before him on which he is going to make 95 per cent. Do not think of that at all. I never see him at an examination. Nobody dislikes examinations more than I do. There is nobody's soul tortured more by the demon of examination than mine. I would that he were gone. I would that he were consigned to some regions far beyond mortal ken, where examination papers would not last very long. But I want you to think of the little boy before you not as passing examinations, not as being laureated by President Loudon in the pavilion amid the blare of artillery and the shoutings and glorifications of students, or of Queen's University kneeling before the Principal and acknowledging fealty to him as the great President of the University. Not at all. That were a small distinction. I want you to see that boy as an independent manly citizen twenty-one years of age going to the ballot box with his first ballot in his hand, feeling now that he has reached his majority, that he is now laying his hand upon the government and constitution of the country, representing five or six millions of people owning half a continent, and that he has reached that degree of magnitude and maturity in which he is bound to read, mark, learn and inwardly digest the public questions of the day, so that with an independent soul and with a firm resolve to do what is best irrespective of creeds or parties or any other interests for his country, he can mark that ballot as becomes a free man. That is where I want you to see him; get there. That is the objective point of the school-room; the objective point of the school-room is citizenship. Good examinations count nothing. Great scoundrels have passed examinations. We have hung men who have passed examinations. We will do it again. But you do not hang good citizens. You dare not hang good citizens; they cannot be hung. His Honor Judge Creasor is in the chair and another, Judge Bell, behind him; on the bench two judges could not hang, nor twenty judges could not hang, good citizens, but we will hang lots of lads who pass examinations. Your objective point is that point at which your study or effect upon the child's mind and character and life converges into citizen-

ship. Land him safely there, land him with the gentleness with which good Sir Isaac Walton would land his trout, bait the hook so cunningly that that trout will delight to take it into his mouth. Bring him gently to the shore and put him into your basket, and let him rest there so happily that he is delighted to be laid out the next day for your breakfast table. Make him feel that you are his friend everywhere, even when he is in the refrigerator for violating the school regulations in some way. Phideas did a great thing when he carved those wondrous forms in marble which the world cannot forget. There are some men we cannot forget. There is nothing worthier of admiration than a good man. It is the personification of all the qualities that make for life, that fits for the life that now is and that prepares or lays a good foundation for that which is better beyond. A word or two more, and I have done. I am not exactly pursuing the line of thought I intended; but I want to say another word on another point. We welcome you because we think you have respect for the fundamentals of a good education. Now, we are in the age of fads. Every man has a remedy. If ever any of you were afflicted with rheumatism as I have been, you would be astonished at the marvellous resourcefulness of the pharmacopœia of the general public—not of the medical profession, for they have one remedy or two, and if it does not cure you it does not kill you, but every man who ever limped or walked with a crutch or a staff, or whoever drew up the face in the most painful manner because of some rheumatic twinge, can cure you. I have old receipts in new drawers, and new receipts in old drawers, and bottles enough to start an apothecary shop. Some men can teach history as no other men can teach it, and do it quickly too. Some man by his helps in arithmetic can give you a short-cut so that these examinations will be crossed as a horse takes a hurdle, and is over on the other side, neck or nothing. All these are short-cuts, not to glory, but what is greater than glory—to a successful examination, a qualification of the teacher to enlarged honor; and then you begin to think what after all is there in teaching but a process of by so manipulating the child's mind that all he has to do is to draw his finger across his forehead and he has got the solution for that problem right there. It has been put into him; it sweats out of him by an ordinary capillary process, and he solves a problem without any mental assimilation whatever. The teachers of Ontario are not pursuing phantoms; they are not chasing mere will-o'-the-

wisps; they are standing by what the old lady said to Norman MacLeod long ago when she asked him to read certain questions of the shorter catechism—she says "going over the fundamentals." They are standing by the fundamentals, by solid educational thought; by good solid work in arithmetic, not too much—I am a little heterodox in that myself, perhaps that is my fad; by a good, thorough grasp of the English language. Grammar is no good unless it leads you to avoid grammatical errors; literature is no good unless it helps your vocabulary. Lord Chatham went over his dictionary three times every year when he was a young man—his dictionary!—try it on with a Worcester unabridged, it was old Dr. Johnson, I think in his day—in order to improve his vocabulary. Literature is nothing unless it improves your vocabulary and gives your mind a wider range, fertilizes your mind, and so on. Geography is no good unless it gives you some conspectus of the world and it makes you feel that all of Canada is not all of the world, although it is a great part of it. No, you want to widen the horizon of your mind by standing by the old fundamentals —we usually say the three R's; that term is becoming somewhat obsolete, and yet there is a great deal of truth in it. The honest painstaking teacher that gives a child the key of knowledge through a knowledge of the English language and a taste for English literature, that gives a child a knowledge of English history by letting him see the purpose that runs through all history, that gives him a taste for the study of nature by bringing him directly in contact with nature, and thus studiously and steadfastly and, it may be, quietly educates him up to think for himself, to reason his way to his own conclusion, is the teacher that will make strong, well-developed Canadian citizens. We hear a great deal just now about technical education, and there is a great deal in technical education. I am just going to read you a few words by way of variety, for it will be a good deal better than I can say on the subject of technical education, and expressing my own views. I have first a short quotation from Sir John Gorst, who is practically Minister of Education in England just now, and this is what he says:

"Now, some people say that technical education should begin when the child enters school. I cannot get myself thoroughly imbued with that notion. I think in our universities we specialize too soon. We do not lay a broad enough foundation of a general education."

We have been giving a preference for many years to teachers who hold specialists' certificates in our High schools. If I am Minister of Education long I am going to give a preference to those who hold general degrees in our universities, as having a peculiar kind of fitness and an all-roundness which enables them to take a proper view of things. A specialist is a most intense man, and intense men are very good and necessary, but they are nearly all post-graduate men in a certain sense. What they lack in breadth they may gain in depth or height; but we want in addition to this a general breadth of education which will bring us in sympathy with a greater number of centres, which will attach you, as it were, to a greater number of telephone wires or telegraphs, and enable you to speak with the east and the west and the north and the south. So many have but one means of communication with the world; that is not enough in this busy age. Now, some say that we should have agriculture at the very foundation of our schools. We propose to have it in our Public schools. We should have manual training, domestic science, all very necessary, but while drifting to all these in a certain stage, let us see to it that we do not sacrifice for what is mere technique, for the manipulation of one's fingers and the motions of one's wrist, the development of the brain, which, after all, is the thinking power. Was it not Goldsmith who said:

> "'Tis something proved on every soil
> That those who think must govern those who toil?"

And it is true; thought comes from the brain, and the world is moved by thought, not by manipulation, moved by brain power, which is the great dynamic force that moves the world. Now here is what Gorst says:

"The first thing he would urge"—and this is the speech delivered by Sir John Gorst in December, 1898—"the first thing he would urge upon every one was that elementary—that is, our Public School education—was the bed-rock on which the whole superstructure must be built. There was no use attempting an international system of technical instructions until they had a sound system of elementary instruction on which that was based. It had been officially brought to his knowledge over and over again, the failures and attempts made to train young persons in technical knowledge because of their want of sound elementary education."

Good from Sir John Gorst, a man of very high standing. Now, here is what the Duke of Devonshire says when he was President of the Council, and who introduced into the House of Lords the other day a very important bill on secondary education. Speaking at Derby, January 18th, 1898, he said:

"He had, among some much more able than himself, during a good many years advocated the absolute and national necessity of giving to our people a better technical, artistic and scientific training. He had urged it in the interests of the maintenance of our industrial supremacy, and in the interests of our industrial and commercial existence. The necessity for placing these means of technical instruction within the reach of our people was now universally admitted. There was a movement in this direction in every part of the country, and in addition to what had hitherto been known as a technical education movement there was a call, he observed, for what was a practical commercial education, but what he thought was not yet quite fairly understood, and what you felt he had hitherto failed to understand himself more than in a very imperfect degree was that we could not have this technical, scientific or artistic training to any great extent or in any valuable degree except as a part of a sound general system of technical education. We could not graft scientific or artistic education upon the stunted stem of a deficient elementary education. On the other hand, he believed that special study and development of a sound general system of education would be found to be of great and largely increasing advantage."

There you have the opinion of a man who has watched the growth of education in Great Britain and elsewhere. Here is the most important quotation of all. A year or two ago there was published by Mr. Williams in England a book, called "Made in Germany," which created a great sensation because it rather raised an alarm in England that England's manufacturers were to be superseded and overwhelmed by the industrial supremacy and skill of the German manufacturer; and Williams referring to what was made in Germany, tried to make out that it was because of the technical schools of Germany that her industrial skill was so great, Instructions were sent to the English consuls of the different parts of Germany to inquire into this matter and make their report. Consul Powell's Report on Commercial Education in Germany, dated November 19th, 1898, says:

"The great success that has attended German trade since 1873,

but more especially during the last ten years, has been frequently attributed in Great Britain to the superiority of commercial and technical education in Germany. This is not the view taken by those best able to judge of the facts by close acquaintance with them in Germany. They are rather of the opinion that this success is due less to superior commercial education than to the high state of general education that Germany has enjoyed for many years, and which was formerly lacking and is even now lacking in several essential points in Great Britain."

What I want to impress upon you by these brief observations is this: that you who are to-day in a quiet way laying the foundation of a good elementary education, are doing that which is most helpful for those who are concerned with technical education; and on that foundation, as Devonshire has said, only can you graft the vigorous plant of a proper and successful technical education. I say that again in order that we might steady our minds; for now and again the public mind is disturbed by these stories and by these large expectations, and as the Scotchman said:

> "Far away birds have bonny feathers
> And far away hills look green."

And now and again there comes a message from some land that tells us that that land is flowing with milk and honey, whereas we know there is neither milk nor honey in that land. Ours is barrenness and sterility, they say, because we do not do as they do, in such and such a land, in such and such a portion of the globe. I would not be too conservative, nor would I be too radical. I would be glad to improve, and propose to improve our system by adding to it the technical; but I want to be permitted, if you approve—and if you do not approve then somebody else will have to be permitted—to work as I have been working, because you have been working laying the foundation of a great broad English education. That is the corner-stone. Good instruction in the elements of an English education, good vigorous feeding at the breakfast table on whatever meal is plain and nutritious, leaving the finer elements and condiments to be devoured afterwards if your stomach will bear the potion, but in no case deranging the digestive arrangements and in no case trying to palm off stones for bread or frills of education for the solid work that educates a man. Do not quote me as having any patience with tinkering, with superfluity, with attempting to pass examinations by helps or props or crutches. Honesty

in education is the best policy for the teacher, and I know it is the policy you practise. It is the best policy for the Minister of Education; it is the best policy for the country. Let us be true to the Anglo-Saxon tradition of a vigorous English education, and let the profession in this province stand up for what is solid and substantial rather than what is gaudy or ornamental or merely decorative. I hope, ladies and gentlemen, that this long prelection has not wearied you. It is the only opportunity I am going to get to talk to you. I am glad, right glad to have you here. Nowhere should you be more welcome than you are at the Education Department—by no person more welcome than by the head of that Department. I am glad you have come in large numbers. I hope you will enjoy it as a holiday. Do not carry your cares with you. A famous banker said he made his fortune because he carried his bank to bed with him. Do not carry your banks to bed with you. Do not carry upon your shoulders your schools. Do not carry your troublesome trustees. Do not carry the Mrs. Grundys who tortured you during the last three months. Do not carry the spectre of any troubles yet to come, but throw cares to the wind. As Daniel opened his windows and prayed with his face towards Jerusalem, so open you your windows and pray with your faces towards the sunshine of these better days—

> "When the air shall be filled with music,
> And the cares that infest the day
> Shall fold up their tents like the Arabs
> And as silently steal away.'

Alderman Graham, Chairman of the Reception Committee of the City Council, extended a hearty welcome to the delegates, giving them not only the freedom of the city, but to all the public institutions. He intimated that the City Council would offer them some special attention on the morrow.

The Hon. Minister of Education invited the audience before leaving to spend a few minutes upstairs. Since last year, with the assistance of Mr. Scott, a herbarium had been established in which were about 2,000 plants of Ontario, and nearly every bird that flies in Ontario; also a number of new pictures in the art-gallery, and other objects of interest.

The PRESIDENT: I apprehend that the audience is sufficiently satisfied without any address from me now. They are all on the move, and it would be a waste of time, I think, for me to under-

take an address in response to the addresses of welcome. All I can say is, on behalf of the Association we return our hearty thanks to the various speakers who have addresssd us this evening, and to the Minister of Education more especially ; and I want to say one thing, that I am rejoiced at the position he has taken in regard to discountenancing fads, and laying down the proposition that the fundamentals of education should first be laid, and then any fad that may come up may be built upon the foundation of a good, solid, English education. Let us keep a limited number of subjects, and then we will have a more solid and better educated community, because if the foundation is well laid each individual can build upon that foundation throughout his life by studying from time to time.

Mrs. Thompson announced that she had interviewed the Hon. the Minister of Education in relation to the Historical Society, which had appointed a Monument and Tablet Committee for the purpose of erecting monuments and commemorative tablets throughout the Province, and bespoke the co-operation of the teachers in the efforts of the Society to erect monuments to those men and women who have made it possible for Canada to be what it is to-day. The first effort will be the erection of a monument to Laura Secord. Already about $170 are in hand, and subscriptions are asked from all the historical societies in the Province and from all those who are interested in the subject. Only ten cents is asked from each person. Permission has been asked to have a collection taken up in the Public schools on Empire Day, 23rd May, or on the 23rd of June, which is the anniversary of the day upon which Laura Secord walked from Queenston Heights to Decew's house. One cent from each child in the Province towards the monument to commemorate that noble woman and the wonderful work she did, and how much her walk of twenty-six miles meant. Of that $170 in hand, $50 was sent by the officers and men of the 49th Regiment, now in Jamaica, which was the regiment stationed at Decew's house, and to whose rescue Laura Secord went. She hoped that when the circulars reached the teachers they would respond heartily, and if the permission of the Minister was given for the collection in the schools that the teachers would aid in the work.

CHARACTERISTICS OF ECONOMIC HISTORY OF CANADA.

PROF. ADAM SHORTT, M.A., KINGSTON.

Mr. President, Ladies and Gentlemen,—I have been asked to address you this evening on some topic connected with the economic history of Canada. Personally, I should have much preferred to take up some specific period and treat it in detail, but perhaps the time has not yet arrived for such a treatment in public. There has not been much effort, hitherto, to deal specifically with the economic history of Canada. Not that the economic aspects of our history have not been dealt with, but there has been no attempt to take up in any scientific way a specific treatment of the economic history of this country. Thus I have come to the conclusion that probably a general reference to the trend of our economic history would be more profitable than the taking of some particular period and the treating of it in detail. The history of Canada is by no means a simple history. Although the country itself is not to be regarded as extraordinarily important in the world's history, still it is rather unique. Canada is the meeting-place of a great many influences, of three strong lines of influence in particular—the influences affecting France, the influences affecting Great Britain, and the influences affecting our neighboring State, the United States of America. We cannot understand Canadian development, the experiments which have been made in this country, the value of those experiments to our own country and to the world in general, without understanding in a fair degree the forces working in France, in Great Britain, and in the United States, because up till quite recently Canada has not really determined her own place and her own position, but has had it determined for her very largely by the influences coming from one or other or all of these countries. Nowadays, when there is so much revived interest in colonial expansion, Canada should, and will, I believe, take a place in the world's history out of proportion to that which she has occupied in the past. There is no country to-day which exemplifies so much experiment as our country. The American colonies, before they broke off and became an independent nation, exhibited a wonderful amount of interesting experiment, which has attracted attention throughout the world. It will, I believe, in the coming years attract still more attention in the United States itself. But hitherto the real meaning of Canadian development for the world, and its bearing upon constitutional, economic and, above all, upon colonial development, has not

yet been properly recognized. All I can do this evening will be to point out a few of the circumstances, a few of the phases connected with that history, and to illustrate them by reference to a few concrete facts, but mainly to deal with the general trend of events. Most experiments are failures. Necessarily so. No man or country striking out on new lines, on untried paths, can expect to make success at every turn. It is inevitable that the great majority of the experiments should be failures, and Canada affords no exception to that rule. The great majority of the experiments represented in Canada have been failures. The unexpected has usually happened. And it is not the least of the points of congratulation for Canadians that they have survived so many unfortunate experiments—that they are to-day in a position which proclaims them to be almost out of the ordinary colonial experimental stage, and coming to a conscious direction of their own affairs. But Canadians require, more than perhaps most people at the present time, to understand what the course of their development has been—what the nature of the experiments which have been performed on their own soil, in their own country, has been. When we go back to the beginning of Canadian history and find that Canada was first the experimenting ground for France, we recognize that at that time the world was taking on an entirely new phase of development. The Renaissance in Italy had run its course in a special section of the community, because that great awakening and development was not really a national movement. It was rather a sectional development, and the reason why it spread so rapidly was due to the fact that it did not carry a very broad front with it, and yet it was of exceeding value to the world. The real awakening of the people lay not in the line of artistic and literary expression, which was the characteristic feature of the Renaissance period, but rather in the development of the commercial lines which were fostered indirectly by these other movements. It is to Italy that the world owes the enormous expansion in colonial development. The first great explorers of all the leading nations were Italians. We have Columbus discovering for Spain; Vasco di Gama for Portugal; Verazano for France; and the Cabots for England. These men led the way, other men followed. In many other lines we might illustrate the advantage which the nations of Europe derived from the scattering of the influences of the Italian Renaissance. The men who carried this new spirit forth into the western world were exceptional men. The characteristic features of some of the first experiments were due to the character of these

men. The first explorers among the Frenchmen who came to Canada were of two classes. Of one class we hear very little, but we find a good many of their traces. That class represented the hardy Norman and Breton fishermen and traders of the north-west coast of France. These men evidently fished and traded on the banks of the St. Lawrence and round the shores of Newfoundland long before Jacques Cartier and the other French explorers opened up the country, because in almost every case the explorers known to fame found traders and fishermen and men of that character before them. These men made a profitable but quiet development of trade. But when the Court took up the cause and gave its support to the exploring expeditions in the interest of the king, things were changed. The first men sent out were usually of a roving character, men daring much, unaccustomed to settle down to anything stable. The consequence was that the first explorers and traders in Canada, under the dominion of the companies and their charters, were men of exceptional ability in some ways, and yet of very restless disposition. When, therefore, the Court of France began its despotic control of Canada, these men were not at all inclined to settle down quietly under it. But the characteristics of French development in France determined the character of the colonial expansion in Canada; and we cannot understand that colonial development until we understand the ideas that were working in the minds of the French Court. We have to understand very thoroughly the character and policy of men like Richelieu and Colbert. Colbert was a man greater in many ways, I think, than almost any statesman of Europe, before or since. But the very success of a man like Colbert placed the organized and developed power of France completely in the hands of the monarchy; and Louis XIV., for whom he operated, was able in the end to use France as one huge war-club in his operations in Europe, and to exhaust that country before he was through with it. He used Canada in the same way, because the colonial idea, whether of Spain, Portugal, England or France, was the idea of working the colonies from a home base, with home charters and home directions, and for home purposes. That was so thoroughly the idea that almost no one of the earlier period takes the trouble to defend it, but simply puts forth that as the indispensable condition of the carrying on of colonial development. When, therefore, we come to the detailed explanation of the development of Canada under French rule, what we

have is a form of despotism—a form of despotism more rigorous in many ways than that of France itself, but tempered by certain local conditions. It was a despotism tempered by access to the woods, and that explains why so many of the first colonial representatives took to the woods rather than submit to the restrictions that were put upon them by France. They became traders and explorers and expansionists to the west, in spite of many declarations sent out by the Home Government that they were to be repressed and held back. The other aspect of the use of the colonies entirely for the home country's benefit is to be found in the regulation of their trade. They were required to develop such things in the colony as would tend to the prosperity of the home country, under the ideas that prevailed at the time. They were prohibited from undertaking the development of manufactures or other lines of expansion on their own account or for their own benefit, if they could not be proved to be directly to the benefit of the home country. Now, the course of policy in France itself led, as I have said, to the development of a great bureaucracy which tended to put all power in the hands of the monarchy. In England, on the other hand, from the time of the decay of the feudal system, there had been developed a system of individual independence and a sharing in the government of the country by the representatives of the people. These two characteristic traits express themselves very conspicuously in the colonies. The English colonial system, as a system, differed in almost no respect from the French colonial system, and they were both borrowed from the Dutch system, which itself was an outgrowth of the Spanish, so that the general colonial conceptions of Europe presented little or no conflict in theory. In practice the colonies exhibited all the peculiarities of the countries which they represented. Thus the English colonies reflected from the north to the south the characteristics of the people who founded them. As the northern American colonies were peopled by the ultra-individualistic Englishmen, so they maintained from the very beginning an independence unknown in any of those to the south. Yet the southern colonies, though organized and developed under charters and by governors sent out from the home country, also asserted themselves to a very considerable degree. Thus the Carolinas, Georgia and other southern colonies went through very many interesting experiments. It is said, for instance, of the Georgia colony, that perceiving the defection which had resulted in the Carolinas from sending out governors, charters

and all, and expecting them to be managed there, the Georgia Company retained the charter and ultimate management at home, sending out the colonists and the governor. They repeatedly called for returns from the colony but got none, until finally the colonists sent home the governor, the only remittance that the colony ever made. So that even in those southern colonies which were organized and managed on a commercial basis, we find a certain amount of that self-assertion and independence which was exhibited in an exaggerated degree in the northern colonies. One chief reason why there was not more friction between England and her colonies was that the policy which was pursued happened, to a very large extent, to coincide with the natural development of the country. England was also too busy at home with the revolution from James II. to William and Mary, the change from William and Mary to Queen Anne, and from Queen Anne to the Georges, to spend much time and consideration in carrying out in detail her colonial policy, which did not, however, alter in theory. Yet the colonists had a tendency to independence on their own account, and the English Government had a tendency to let them take their own way. I think it was very truly said that Walpole, during his long administration, was really the man who lost the American colonies. But that was judging the matter from the point of view of George III. and his ministers who attempted to put into force what had been the theory all along but not what had been the practice. Hence George III. and his ministers were able to say with great truth that they were simply carrying out what had always been the policy of England with reference to the colonies. But the colonies by that time had developed an independence which was far beyond what the English Court had dreamed of. Thus we get in the contrast between the New England and the French colonies, a real and striking contrast between two wholly different expressions of colonial development, yet represented in Europe by practically one and the same theory of colonial expansion. Now, I have no time to go into the details of this contrast in French-Canadian history. That is one of the features which I should like to have developed, but time forbids. I must go on to consider how this worked out in connection with Canada when Canada passed from French to English dominion. We find that in French Canada we have a remarkably small development of industry, and a very considerable development of autocratic government. We have a very

strong conflict between the commercial policy of the commercial element and the church policy, representing a higher ideal in many ways, but to a large extent an impossible ideal. If you study the life of that most remarkable man, Bishop Laval, you will find a character of great range of capacity and resource, altogether one of the most remarkable characters in history. I can thoroughly recommend the study of that man to your consideration. Bishop Laval had before him a high ideal for the Church in Canada. But one of the characteristic trade developments of America was that of the Indian liquor traffic. The Indians were easily managed by selling them brandy by the French and rum by the English and Dutch. When therefore the trade interests came up for ultimate settlement in their conflict with the Political Policy, we may say that the matter centred around the question as to rum and brandy, with the questions of fur, kettles, knives, pins, cloth and things of that sort as secondary considerations. Well, one of the characteristic features of the development will show you, if I give it in concrete form, the attitude of these colonists to each other, and their point of view. France preferred, as I said, to keep everything under its own control, but the goods sent out to be sold in Canada by the French usually sold at twice the value of the corresponding English goods. Moreover, at that time English free trade in practice was exhibiting itself. English cloth had so completely controlled even the French markets that the Indians would take nothing else, and samples were got from England to be imitated under royal instruction in France, in order that they might cut into that market, but all in vain. The traders and the governors from Canada reported that it was impossible. There was just one item in which the French were superior to the English in price and quality, and that was in powder. Both French and English sold very inferior guns, and these were the cause of blowing a good many Indians into space. But that was a small item compared with the white man's burden, which the Indian bore in the shape of liquor. There we have the rivalry of French brandy and Catholicism with English rum and Presbyterianism or Puritanism. Now, here come in the characteristics of the two nations again. The Frenchman had a capacity for sympathizing with the Indians, for attaching the Indians to him in all ordinary ways and in some extraordinary ways, and he usually controlled the majority or mass of the Indians. His religion, too, appealed to the imagination, and

the Indian was to be reached only through the imagination. The hard Calvinistic doctrine of the northern New Englanders was absolutely lost on the Indian, and the Calvinist or the Independent took little or no pains to soften it for the Indian; consequently he made almost no converts, while the Frenchman made thousands of converts. On the other hand, the Englishman sold, as I have said, goods at 50 per cent. less than the Frenchman, and that was an enormous attraction to the Indian. Hence we have the Frenchman's manner and religion *versus* the Englishman's cheap goods and high prices for furs, and this was the secret of all the conflict that went on. It was here that Bishop Laval came in to attempt to put down absolutely the French trade in brandy. At that time the English, too, were making great efforts—the governors and many of the more respectable parties—to keep down the trade in rum, and Bishop Laval was able to point, in support of his theory, to the fact that in New York State and Massachusetts, to a large extent, the English had prohibited, for the time being, the rum trade. But it was only for a short time. The brandy traders from France, on the other hand, maintained that French brandy with a tendency to Catholicism was much better than English rum with a tendency to heresy; and in a grave State document sent home to Louis XIV. we find this argument used. They said: "What Bishop Laval says is all very true, and all very good, but it won't work in Canada, and we will show you why. These poor Indians, if you do not give them brandy, will certainly go to the Dutch and English in New York State, down by Albany, and get rum. Now observe what happens on Bishop Laval's own ground. They go down there, they get loaded up with rum, they become helpless, they are no longer masters of themselves. What happens? The Dutch bring on their Calvinistic preachers, and when the Indian is in that helpless state they preach Calvinism to him and he, being unable to resist the influence, wakes up from his debauch to find himself a lost heretic. If Bishop Laval is really interested in the salvation of the Indians he will let them have brandy." This is a fair indication of the kind of argument that was used and the methods that were resorted to at that time. We come down to the conquest. Here we find that conflict which had been going on between the French colonies with the French colonial system and the English colonies with the English colonial system, transferred to Canada. In a few years afterwards, the breaking off of the English colonies from the

Mother Country and their setting up as an independent republic left Canada the representative in itself of the two colonial systems, as it has remained to this day. The harmonizing, if possible, of the one with the other was dropped as an international feature and became a Canadian question. To what extent we have yet solved it I leave for modern history to say. With an English element introduced to Canada, a small element at first becoming large when the Loyalists came, we find two systems in one country. Unfortunately the war with the colonies stereotyped in Canada a system which was beginning to be whittled away in the first administration of justice in Quebec. No one, I fancy, can fail to sympathize with the interest of the Frenchman in the maintenance of his own law, religion and methods of government and life. But what we find is, that while neither party had any objection to perfect liberty of conscience or to the maintenance of the Roman Catholic religion by the French, the English element did most strenuously object to the maintenance of French law and methods of government. But the despotic control of the country which was vested in the hands of the ruling class in Canada, was too tempting an arm to be discarded by the English governors, and consequently Carleton, a most able soldier, the ablest of all the English generals in America at that time, looking at it from the point of view of a soldier, said: "Keep the French system and you will keep that check upon the English colonies which the French had always exercised until the conquest." He afterwards had occasion to repent that, and to write that he had made a mistake, but at the time he frankly declared that Canada never could be an English colony. The climate alone, he said, made it impossible for Englishmen to live there, and to the end of time it must be peopled by Frenchmen. If so, what was the use of changing the system? His contention was agreed to under the exigencies of the time. But when we follow in detail the development of law between the conquest and the Quebec Act, what we discover is, that there were operating influences which would have very soon assimilated to the English system the whole of the French element, because those who were interested in maintaining the old French system, were simply the *noblesse*, or old nobility, on one hand, and the clergy on the other. But the clergy expressed themselves as willing to be satisfied if they were permitted to retain the freedom of their religion and their right to collect tithes. The nobles, however, were very much opposed to the putting down of their privileges and their principles.

As matters stood, after the breaking off of the American colonies, and after the coming of the Loyalists, what we have in French Canada is a reproduction of the struggle for liberty. The Loyalists were brought in under the established French system, and from the very first these men, who had fought for England, as against their revolutionary brethren, showed when they came to Canada that they were not prepared to sit down quietly under any system which Britain might choose to foist upon them. In the despatches of that period, if you read them in detail, you find that the governors of Canada and others of the chief men there had little confidence in the Loyalists. They repeatedly state in their despatches to the Home Government that these people are likely to rebel unless something is done, and one section of the officials recommended very stringent measures, the other recommended the granting of liberty and privileges. The matter came to such a crisis that at last Carleton, then Lord Dorchester, had to call a commission to investigate Canadian affairs—to discover the real situation of the country—and a most voluminous and minute report was handed in on all the aspects of the Canadian situation. A large amount of the evidence is of an economic nature, because, of course, the interest in the country from the point of view of the Home Government was largely economic. One thing the British Government had learned in the struggle with the colonists, and that was, not to force taxation upon them. From the time of the American Revolution Britain never attempted to force taxation, but she maintained almost all the other elements of the Navigation Acts and the old colonial policy, so that Canada found itself shut up under an old system when the United States had become free. Up to that time there had not been a great deal of difficulty, but from that time the difficulties became more numerous and more pressing. Another aspect, as Adam Smith has so frequently pointed out, of the economic side is the question of security. There may be enterprise and development on the part of the citizens, but these will go a very little way unless you have legal security. Now, the great point is that in French Canada, between 1774 and 1791, there was no legal security. By the Act of 1774 the French system of civil law had been literally imposed upon the country. But the French system of civil law in Canada was a very inadequate affair. It was far behind the system of civil law in France at that time, because in the course of the development of France on its economic side it had adopted what was known as the Code Marchand or the

Mercantile Code. That was never transferred to Canada, and Canada lived on the commercial and economic side, on a code that was antequated and wholly inadequate. The result was that the merchants dealing with Canada could not collect their money, could not find secure investments. Thus the expansion of the country and the commercial development of it were immensely retarded. The report which I referred to, is full of the most minute and particular details as to that. On the economic side again the colonists complained of the operation of the colonial policy and the Navigation Acts. They were not encouraged, for instance, to manufacture rum in the country, because that would interfere, on the one hand, with the British West Indies and, on the other hand, with the English home trade. And duties were arranged requiring them to get their rum through England when they could have got it ever so much cheaper from the West Indies, and very much cheaper also from the United States. Again, in the case of spirits of any kind, the manufacture was prohibited, and in the matter of several kinds of goods they were not permitted to get them from the neighboring colonies or to manufacture them for themselves. But let me observe, what is commonly forgotten, that while England fastened all these restrictions upon the colonies, she applied corresponding restrictions to herself. In order to foster the bringing of timber from the colonies, that is from Canada, Nova Scotia and New Brunswick, she put a heavy duty on the timber from the Baltic, which was of a better quality and better suited to the English shipyards. She also paid a heavy bounty on Canadian exports in order to develop colonial trade. So in the matter of grain she gave special privileges to the Canadians, while, on the other hand, she often shut down upon them by the sliding scales which afterwards came in, and thus the Canadians were eventually in the situation of never knowing when they had a good crop whether they could get a market for it or not. They found eventually that they could get a market in southern Europe for both their grain and their fish, but they were not permitted to import from southern Europe the goods which they could get in exchange. They were to sell for cash, take the cash to Britain and bring the goods from Britain. In many other ways the colonies were restricted to the home country, and the hands of the home country tied in their dealings with the colonies. Now, while that was the practice and policy of Britain in the economic development of the country, it was not the policy advocated by all her able statesmen. Chatham,

it is true, had held to the colonial policy on its economic side, but Chatham was the man who, in his dealings with the colonies at the time of the conquest of Canada, had really laid the foundation for the separation by refusing to impose taxes upon the colonies, simply making requests to them, yet he stood by the Navigation Acts. But his son, William Pitt, and Lord Shelburne and Fox and some others stood out boldly for throwing off all restrictions on the remaining colonies. Lord Shelburne and Pitt brought in, immediately after the Treaty of 1783, a bill for the purpose of declaring freedom of trade with the newly developed power of the United States and throwing off the obligations upon the colonies. But that was defeated, and it was reserved for men like Huskisson to gradually whittle away the colonial restrictions much later. But it is quite certain that if the French Revolution and the troubles and wars that came to the world for about twenty years, had not intervened, we should have seen a rapid development of a free trade movement in Britain. However, when that war came to an end the tendency of America to purchase on the continent was largely taken away. The continent had nothing that it could sell as cheaply as Britain. Britain had undertaken the expansion of her trade, her shipping and her manufacturing generally. The consequence was that she was actually the cheapest country in which to buy, and had it not been for the impediments to trade on the American continent there would have been little difficulty with Canada owing to the Navigation Acts and the Colonial Policy. From the Peace of 1815 we have the struggle in Canada for economic freedom as well as for political freedom, and the struggle for economic freedom was largely connected with the struggle for political freedom. The Act of 1791, when you read it in detail, is very striking evidence of the shortsightedness of the statesmen of Britain to the situation in Canada and the changed circumstances in America generally. If you read the speeches of the Government at that time, even of Pitt himself, and contrast them with those of the only really enlightened man of the time, Fox, you observe how far behind they were in their appreciation of the colonial situation, and when you consider the working of that Act in its details you see that Canada was placed under a system that was to operate for an indefinite time, a system of restriction and of conflict, the effects of which were so elaborately presented in the various reports sent home to the Mother Country, and particularly in the special report of 1828, and afterwards in Lord Durham's report. Finally I

wish to refer to one or two special aspects: First, with reference to the men who made their money in Canada and what became of them; secondly, with reference to the immigrants and how they were treated, and the land system and how it worked; and lastly, what are some of the conclusions to be drawn. Well, I shall have to state these in the briefest and most dogmatic way. With reference to the men who made their money in Canada. In the colonial system which looked to the holding of a colony in the interest and for the benefit of the home country, men were encouraged to go out to the colonies, to make their money and to come home to Britain to spend it. In the report of 1828 several men acknowledged that such was their method of doing. Now, that meant the accumulating of wealth in Canada, and then the taking of it out of Canada. When asked why they did not reinvest their money in Canada, they said: "The laws and customs prevent us; there is no security in the country. We dare not continue to invest our money under a system of laws such as prevail there. We prefer to bring our money home, to invest it in Britain, although normally there is a lower percentage of profit than in the colonies." At the same time over the line in the United States men who made their money there were investing it there. Capital was pouring in from Britain itself to the development of that country, and these older Canadians and older Britishers—men who were ready to take up arms at any moment against the United States—declared frankly in their evidence that the United States was going straight past Canada owing to the peculiar conditions in the latter. Then with reference to the immigrants. After the Peace of 1815, there was a plethora of population in Britain accompanied by a depression in trade. The system that had been worked up in Europe, when the war passed suddenly collapsed. Armies were discharged, people were in poverty, the governments were not buying, and the people could not buy. Consequently, many persons in Britain were thrown out of employment and the whole trade system was suddenly changed. A great many people were impoverished and had to look for an outlet. They poured over the Atlantic, and naturally came first to Canada. But when they came to Canada they found the land monopolized, or all the available land monopolized. They found a system of laws, of land grants, and of administration, which they could not live under, and the consequence was, as we have any amount of evidence, that they passed on to the American colonies, giving Canada a very bad

name which she has not got over to this day. Immigrants, who wrote back to their friends in Britain, declared the state of things here, and the result was that immense floods of British emigrants afterward went straight to the United States. Now, that may seem a hard statement, but it is a statement which can be backed up by any amount of evidence, such as we have now in the archives at Ottawa since the bringing over of the reports which were sent to Britain almost day by day from Canada, exhibiting the conditions there, and also in the elaborate special reports presented afterwards. So much for that. Then a word about the land system. Under the Constitutional Act of 1791, various expedients were proposed as an offset to the development of democracy which was greatly feared. The Loyalists, as I remarked before, coming from the United States, while loyal to Britain, were thorough Americans in all their views of economic life, social life and all that—their methods were colonial, their ideas were colonial. Only in one point were they different from those they left behind, namely, in attachment to the British cause and to the British name. Finding these people as sturdy in their demands for rights and privileges as any of those they had left, the Government was suspicious of them, and for the purpose of offsetting this democratic development, as it was called, provision was made for an aristocratic feature in Canadian life. The granting of titles of nobility, carrying with them hereditary rights to a seat in the Legislative Council, and the granting of estates to parallel the estates in Great Britain, were parts of the setting up of a Church and State parallel with that of Britain. The members of the Legislative Council and the leading men of the country naturally regarded themselves as the parties who should lay the foundation of that aristocracy. They therefore proceeded to vote themselves tracts of land, under the supposition that these estates would become valuable and like the British estates generally. Then we have also the setting apart of another great quantity of land, interspersed through the country, for the establishment of religion, that is, for the Church, becoming afterwards the Clergy Reserves, with all the squabbles and fights that came out of them. There were also large Crown reserves, also interspersed. All that land was held in complete isolation, without paying taxes on it, without doing any settlers' duties, without building roads or anything of that sort. The consequence was that it simply isolated every settler who went in to take up the intermediate spaces of land, and prevented the

development of Lower and Upper Canada for years until the system was finally got rid of. That is the story of that situation. I have been representing, it is true, a good many of the evil features of the country, the mistakes that were made. Though I have not taken the trouble to point it out, yet I think you can see that many of these mistakes were most naturally made. But it lay with Canada and with the Canadians to teach the Home Government that they were mistaken. That has been the great function of Canada—to revolutionize gradually and step by step the whole aspect of England's views with reference to her colonies. The growth of the Australasian colonies, the administration of India, and the administration of every other outlying region that Britain has worked up since, have really depended upon the lessons learned in Canada. And when we come to consider these lessons again we have to acknowledge the debt which we owe to our American brethren, because the Canadians steadily represented the defects of their system and the disabilities under which they labored as compared with the prosperity of the neighboring States, which was the cause of the exodus to those States. The Governors later on, even Dorchester himself in his last days, urged certain reforms in Canadian administration, because of the awkward contrast which it made with the free development on the other side of the line. So that we must not regard ourselves as wholly having undertaken these reforms, but as having improved on them to a large extent. Now, as to the future of the country in the light of its past. We find that there are certain circumstances which have grown out of the past situation which are still with us. We have still many reforms to make. We have still an indefinite progress before us, though we have very largely got over the original difficulties. But what I wish chiefly to emphasize is the fact that if we would understand why it is that Canada has not developed more rapidly than it has—and that without any reflection upon the character of the people in it—and how it is and where it is that we are to get an opportunity for further expansion, where we are to cut off and where we are to build up, we can never get that knowledge until we have thoroughly understood the development of our past. Therefore there is urgent need for a more careful study of the past development of Canada, both in the interest of the Canadians and in the interest of the world. And I close again with the statement that I made at first: whenever that study comes to be thoroughly and conscientiously made, we shall find that we have a record of

experiment and of development which is absolutely unique in the world's history. As Professor Gardiner, of Oxford, has said, in the time to come people will turn away from many problems and discussions that interest historians at the present time in Europe, and turn to America and Canada to understand how the colonies of the future are to be directed in that colonial expansion which is opening up upon the world now in a greater degree than ever.

A CONSIDERATION OF THE MEASURE OF OUR TASK.

O. C. S. WALLACE, M.A., LL.D., TORONTO.

Teachers are the sages and seers of their age and nation. Their occupation is an office, not a trade. Their task is not that of the slave or the hireling, but is fraught with divinity; for in a large measure they determine the purposes, achievements, characters and destinies of the men of the generation which they teach.

As we do our work day by day many questions arise, processes are studied, methods are canvassed. All this is useful and necessary; but occasionally we need to free ourselves from these details and to consider the great problems and responsibilities of our vocation.

In connection with the young people who seek training in our schools, we find to-day the *three great problems of ideal, motive and sphere.*

A few centuries ago the men who appealed to the imagination of youth were the knight and the priest, or, as they have been described, the man on horseback, and the man with the book. They were the men of power. They commanded a following. They were the privileged men. They were such men as the youth of the land longed to be. The invention of gunpowder and of printing took from the power of the cavalier and left the priest less alone in his learned isolation. When the man on foot with a gun was able to shoot the man on horseback, the power and privilege of the knight suffered loss, and when books became cheap the number who were able to fathom the mystery and share the glory of the priest's learning became large. Thereafter the knight seemed a less heroic figure than before, and the aureole of the priest was dimmed.

The discovery and exploration of new continents, opening wide fields of opportunity, and the discoveries and inventions in connection with steam and electricity, have affected more deeply the problem of ideal than the introduction of gunpowder and printing. These have facilitated commerce and manufacturing. Men of wealth have become numerous, and seem to the poor youth to live in an enchanted realm. Cities have sprung up and grown great,

and city life has become an object of fascination and desire. Positions which are thought to be prizes have multiplied, and their charms draw many hearts after them. The man of leisure, the man of wealth, and the man of power are regarded as privileged men, like the knight and the priest of the Middle Ages.

In new countries like Canada there is in this regard a stronger appeal to the young than in the older countries. Here nothing is fixed, and no high place seems unattainable; everything is formative, and great things are possible; change is constant and often rapid. The walls of caste are movable, and the man who is outside to-day may be inside to-morrow. The high go down and the low go up. The lowly believe they can secure their own exaltation. Many examples confirm this belief; for the sons of the humblest reach the highest places. If the man of wealth is prudent he will treat his servant with consideration to-day, knowing that when her son is Prime Minister his son may be seeking a government appointment.

In an age in which the apotheosis of wealth, place and power is characteristic; and in a country in which ideals of this character seem so near that any man of good parts may realize them, and in which young men are for the most part poor and lowly, and therefore specially liable to be powerfully influenced by the glamor of riches and position, the problem of ideal becomes serious.

The problem of motive is closely allied to the problem of ideal. It is human to desire to get on in the world. As Henry George has said, man "is the only animal whose desires increase as they are fed; the only animal that is never satisfied." The ox is satisfied with a bed of straw whether his owner sleeps on straw or feathers. The dog gnawing his bone feels no envy of his master dining on sirloin. The birds build no better nests because the houses in which men live have become more commodious with the increase of wealth. Animals are not influenced by example or impelled by instinct to seek better things for themselves than their ancestors had. But here man parts company with other animals. He craves that which is better than the thing he has, and this craving is increased by the observation of better things in the possession of others of his kind. Now, among the means of realizing his wish, and in many cases essential to it, is education. An education, therefore, he seeks. It may be that he seeks it for the sake of ease. He thinks that thick-soled boots are a burden; that callous hands are marks of serfdom; that the plow and the

axe, the hammer and the trowel belong to the inferior places of life; that sweat and grime are the insignia of social debasement. Seeing the white hands, clean face and well-fitting clothes of a man who by education has passed from manual to professional labors, he seeks by the same path to escape from daily contact with the things he loathes! Or he desires education for the sake of gain. Wealth charms him; and since a neighbor's son has risen to opulence in some position for which he became qualified by education, and lives now in a large house, and seems to be a very great man indeed, the young man's imagination takes fire, and, mastered by a desire for riches, he becomes a student, industrious, faithful, successful, it may be, and astray only in respect to motive. Or he longs for power. Greed is not his dominating passion. He, like Cæsar, is ambitious. He would surrender his leadership in the games and sports and small enterprises of his native village or hamlet for leadership in the broad field of national life. He enters the door of the school-room that he may graduate into this field of action and opportunity.

Now, all these motives are essentially selfish. That is to say, there is upon them the mark of the beast. The desire for ease, or wealth, or place is akin to the desire which leads the ox to turn from eating hay to eating roots; or the rabbit to leave off browsing on the bark of trees to feast on the gardener's cabbages. Among beasts and barbarians it is characteristic for the individual to care only for himself, the exceptions being chiefly those made by parental instinct. But as civilization advances the care for self and for offspring is succeeded by the care for the clan, and this by the care for the kind, and this, in the highest civilization, by the care for all living things. At this point desires and deeds are determined by self-denying motives, and the man's ideals are akin to the ideals of the universal Benefactor, God. Then the great question of life is not, How can I best condition myself to get on in the world? but, How can I best condition myself to help the world to get on?

Related to the problems of ideal and motive is the problem of sphere. There is a tendency to forsake the country for the town, and the town for the city. This tendency is deplorable, and almost universally deplored. It is true, too, that the professions are overcrowded. There are more certificated teachers, lawyers and physicians than places for them. More serious than this is the fact that many of these have chosen professions for which they

seem to be unsuited. There are lawyers and physicians in large numbers who find it difficult to earn their living. There are preachers for whom no congregation asks. In the teaching profession for every vacancy the applications are so numerous as to be bewildering. Some greatly blame the High schools and universities for this condition of affairs. If the High schools and universities are at fault, let them bear the blame. But is not the source of the difficulty to be found in the ideals and motives of the young? The young man desires an occupation in which he can have clean hands and a starched shirt. Instead of choosing the occupation for which he is fitted, he chooses the occupation which promises the prizes which have caught his imagination. What is needed is that correction of ideal and motive which shall increase the number of desired occupations, exalting those that are now regarded as low, and teaching the young that sweat and grime, and callous hands, and thick-soled boots, and the hoe, the shovel, the hammer and the plane are not hindrances to the carrying out of a true ideal of life, according to the divinest motives. This requires that a man's life-work be regarded as a vocation rather than an occupation; as that to which he is divinely called by his powers, his opportunities and his responsibilities, and not as that in which he has a mind to occupy himself for selfish ends. If a man is so constituted in body, mind and temperament that he will make more than an average farmer, blacksmith or carpenter, but will not rise even to mediocrity as a lawyer, teacher, preacher or physician, his vocation is clear. "Farmer," "Blacksmith" or "Carpenter" is written upon him in letters as large and legible as those which Belshazzar saw. This does not mean that he must or should or may refrain from securing an education. For the enrichment of his own life, and of that of his home and community, he needs an education which shall quicken his intelligence, enlarge his horizon, and make him at home with great thoughts and great men. Unfortunately, it is a common opinion that education is wasted on a man who is to engage in manual labor. This is because manual labor is not properly respected, and because the meaning and use of education are not understood. With correct ideals and motives the prevalent heresies respecting manual labor and education would disappear, and the problem of sphere would be solved. Therefore, to the correction of ideals and motives, teachers must give themselves in fulness of purpose and energy.

Progress in the solution of these problems of ideal, motive and

sphere will depend in large measure upon the greatness of the men who are in the teaching office. In our theories it is an axiom that in order to greatness as a teacher a man must have nobility of character. Let it be so in our practice. No bad man, no man who is developed in body and mind only, no man who is untruthful, dishonest, sensual, covetous or atheistic is fit to be a teacher; and, perhaps, the day will come when Normal schools and colleges will refuse a certificate as quickly to a man who is morally deficient as to one who fails to pass a written examination. If the teacher is not a fit example of refinement, faithfulness, righteousness and reverence, of great-heartedness, broad-mindedness and clear-eyed comprehension of the great duties of life, it is impossible for him, whatever his intellectual brilliancy, or teaching power, to fulfil the duties of his vocation. Lacking nobility of character he is fundamentally deficient, and though he was a prize-winner as a student and is a teacher of prize-winners, he is failing ignobly.

In teaching, as truly as in the ministry of the Gospel, there is need of a lofty devotion to vocation. The teacher must not go to his work as a slave scourged to a hateful task, nor as a hireling concerned to do his work well solely that his salary may be sure, nor as a draper's clerk cutting with wits instead of scissors, and measuring off lessons instead of fabrics. Rather, he must be swayed by the great principles which it is the chief mission of modern pedagogical science to emphasize; he must regard himself as an angel of God, a divine messenger sent forth to complete and perfect by the aid of divine wisdom the most wonderful and precious of the Creator's works. If this is duly regarded, it will prohibit men from seeking the teaching office solely as a means of livelihood, and there will be a powerful, if not irresistible, appeal to the consciences of those whom God has called into this ministry, and they then will choose the weariness, the care and the pain of the teacher's office as eagerly as Craig chose his mission among the miners and lumbermen of the Selkirks.

That the teacher may perform the noblest possible service in his office it is necessary that there should be permanency in his relation to his work. In the higher grades of teaching this may be realized under existing conditions. But in the lower, though not less important, grades, the bar to permanency is the inadequate salary. In many school sections the hiring of the teacher is made a matter of supply and demand. The teacher is bought at the lowest possible price as an ox, or a horse, or an ass. In a community in

which all the people are poor, and the manner of life severely simple, the environment of the ill-paid teacher makes his own position tolerable. But when the people of the community have plenty, a beggarly salary pauperizes the teacher who receives it, impairing his self-respect; and it makes the establishment by him of a home and family impossible. The effect of this is as well known as it is generally deplored. Young men who seek these ill-paid positions have no intention of remaining in them permanently, but use them as a stepping-stone to something better. The same thing is true of young women, a certain class of whom are largely responsible for this evil, which all who are concerned for the teaching profession deplore. Many young women intend to teach only while waiting for their wedding-day. The number of women who believe that they are divinely called to celibacy for the sake of the teaching profession is probably small. It should be small. Woman's divine vocation is in the home and family. There she finds her sphere as the teacher of her own children and the revealer to them by her mother-heart of the mother-love and mother-grace of God. If the many noble women who are now teaching in many schools for a pittance were the wives of the teachers of those schools, and if these were paid salaries adequate to support in comfort their families, the teaching profession would have a new dignity, and the number of happy homes would be greater.

The teacher who would grasp adequately his opportunity must sustain to his pupils the relation of seer. He must be able to discover what their destiny should be that he may forecast and mould their future. Dominie Jamieson, of Drumtochty, could "detect a scholar in the egg." There are great teachers in school-houses nearer than Drumtochty who have this prophetic insight and who are remarkably successful in discovering and training men who become leaders in the world. For such teachers as these the opportunity has been great always, but is greater now than ever before. Of most kinds of commodity and men the supply to-day exceeds the demand, but this is not true of great men. Does it not seem an extraordinary thing that in a period in which the universities are more numerous, the enthusiasm for learning more widespread, and the standards of scholarship higher, than ever before, the supply of men for the highest positions is notably insufficient? There are probably no less than ten or twelve universities and colleges on this continent at the present time looking for presidents,

and several of them have been looking long. It is well known, too, that when the pulpit of a great church loses its pastor, it is difficult to find a competent man to take his place. These are symptoms of a condition. In the past we have said that any man could be spared. This cannot be said to-day; for, while there is an over-supply of men of less than average competency, and for the smaller places a crowding, jostling multitude are prepared, the largest places are hard to fill.

For this condition premature specialization is largely responsible. An eminent American editor recently wrote these words: "A college diploma means very little to-day. It does not indicate anything whatever about the student's all-round information and equipment. The aim of the American college is to give young men an opportunity to study the things they like to study, and not to equip them for life under the leadership of wise and experienced guides. Unless we are greatly mistaken there is to be a reaction from this department-store theory of the college, in favor of the older notion that each educated man needed to submit himself to a rigid but generous discipline which would strengthen harmoniously all his faculties, impart many insights and sympathies, and broaden his mental life in many directions." The distinguished editor who wrote these words is at the present moment a member of two committees, each of which is in quest of a college president. This gives added significance to his words. Now, the matter of specialization is one to which the teacher in our Public schools as well as in our High schools and universities may well give his attention, for the desire for specialization appears early. The grist-mill theory of education seems to prevail almost universally. To many persons a young man is simply a hopper which must be fed according to the kind of meal wanted. If we want literature to come out, we must put literature in. If we want no Latin to come out, we must put no Latin in. If the hopper is to turn out sermons, then why, it is asked, should we clog it with psychology, mathematics, chemistry and the history of the Romans? Now, the wise teacher, the seer, understanding what a youthful mind is and needs, and comprehending the true meaning of education, will dissipate this popular ignorance, and will be satisfied to impart to his pupils nothing less than that training which will secure the harmony of their powers and their preparation for the largest service possible to fully developed men. This being done the general average of competency will be raised, and those students who have in them

elements of greatness will become qualified for the higher places of service.

The true teacher will have in mind the effect of his work on his country as well as on the individual student. This is needed in Canada to-day. The northern peoples are the masterful peoples. In recent years, as in the past, the mighty wrestling of the giants of the north have stirred the world, now with admiration, as when Scandinavia, in the person of Nansen, stood within two hundred miles of the North Pole, or again with anxiety, as when Russia put down her heavy foot on the Pacific coast in northern China. It is a northern nation, too, whose flag, at home on a European island, is seen to-day in Africa, north and south; in Asia, in Australia, in South America, and sheltering the large half of North America, and whose drum-beat is heard around the world. In the past there have been struggles which have shaken the nations; but the great struggles are not all in the past. A greater conflict than any which history records lies in the future. What form that conflict shall take no one knows yet; but Britain builds ships, and keeps watch! Perhaps there will be no carnage by land or sea. But even if swords are beaten into plowshares and spears into pruning-hooks, a conflict is inevitable. Russia with her low type of civilization is pressing forth in three directions, and even if her armies and navies never meet those of Great Britain, there must nevertheless be a clash between her power and that of the Anglo-Saxon. It will be none the less a struggle, and a struggle fraught with infinite consequences, if it is moral and intellectual. Now, what has the Canadian schoolmaster to do with all this? He has much to with it. North of the 49th parallel the foundations of a mighty northern empire have been laid. Between the Atlantic and the Pacific are found resources sufficient to support a populous nation. This nation, if characterized by a high type of civilization, will be vastly influential in the solution of the problems of the future and in determining whether the dominating ideals of the world shall be those of the Slav or the Anglo-Saxon. Such a nation Canada may become. The pioneers of this country have left a noble heritage in the character of their offspring, who, when compared with the peoples of other nations to-day, are not surpassed in respect to virility, courage and native power. The immigrants, too, who are coming to our broad prairies, are, chiefly, representatives of northern races, and in many instances are the best blood, because the martyr blood, of the nations from which they come. We may be thankful

that because Canada has no great cities she is not attractive to a class of immigrants who have introduced into the American Republic a debased life. With a native population of high character, with a promising immigration, with institutions particularly favorable to national progress and stability, and with wide room and abundant resources, our opportunity is great. Our responsibility and our danger are also great. If this nation is to be strong in moral fibre as well as in material prosperity, the teachers of the land must do forthwith, in these days of growth, a great work. In respect to nations as well as individuals, moderate poverty is more favorable to virtue than opulence; and while in our country national weakness is giving place to strength, it is for the preacher and the schoolmaster to determine that Canada shall be distinguished for high ideals, for virtue and truth, for righteousness and uplook, and for a divinely altruistic life.

Another fact which we must recognize as we turn to our glorious task, is, that the progress of society is not primarily intellectual but religious. This is stated impressively by Benjamin Kidd in the 9th chapter of "Social Evolution," in which he illustrates the following propositions: "(1) Our intellectual progress must be far smaller, less significant and more irregular than has been generally supposed; (2) The wide interval between peoples who have obtained the highest social development, and the lowest races, is not mainly the result of a difference in intellectual, but of a difference in ethical, development; (3) There is not that direct connection between high social development and high intellectual development which has been hitherto almost universally assumed to exist." It will be understood that in these propositions Kidd has in mind the effects of a particular side of religious life. While religion is commonly thought of in relation to the future weal of those who have it, or as producing a pure and unselfish type of character, giving peace in the heart of the religious man and making him a blessing to the community, it should be considered also in relation to intellectual progress and power; for religious life in its true development gives that stability of character which leads to a patient, resolute pursuit of high aims, and which, reacting powerfully upon the mind, produces poise, breadth and manifold efficiency. But suppose that we grant all this, admitting that intellectual development will not make a man, a community or a nation great, and that with intellectual development there must be a corresponding moral and religious

development, what has the schoolmaster to do with this question? He cannot set himself to be a teacher of religion. That is not his function. It is true that the teacher in our national schools must not teach ecclesiastical dogmas. And to the preacher he may leave the duty of showing the people the relation of religion to inner peace and eternal good. But he as a teacher has to do with that phase of religion which is related intimately and essentially to social weal and progress. By precept and example he may teach the young to be pure and true, righteous and unselfish, steadfast, faithful and reverent. He is surely a poor teacher, and a worse Christian, who is not aware that a character distinguished for all that is ethically noble and exalted, will speak to the young as the sunbeam speaks to the rosebuds, bidding them unfold in beauty and fragrance. Let the teacher have a profound conviction that his ideals cannot be realized without stirring the pupil in conscience as well as in intellect and imagination; let him recognize the futility of all efforts to lift men to a high plane by means of intellectual quickening alone; let him understand that the being which we call human includes a spirit as well as a body and mind, and he will draw the aspirations of the young upward as the pole draws the magnetic needle.

Primarily, then, the teacher's task has to do with the ethical nature of the young, and demands on the part of the teacher the highest moral excellence. In training the intellect he must train the spirit. In this light his vocation is seen to be divine. Then let him magnify his office, and hope that he shall not live in vain. It may be that he will make no discoveries with telescope or microscope; that he will write no book; that no word of his will be cabled beneath oceans; but nevertheless, his privilege is great, his opportunity boundless, and his service of infinite worth. Let him, like Socrates, be content to write upon the hearts of living men rather than upon the skins of dead sheep; and, when oppressed with a sense of his obscurity, let him remember that Jesus, the Supreme Teacher, announced no discovery in physics or chemistry or biology; wrote neither poem nor book; and never gave to the world the solution of a mathematical or philosophical problem. Like that Teacher we may perpetuate our influence and establish our ideals by direct contact with living men. Though ourselves obscure, we may by our teaching give character to men whose names and deeds the world will not let die. This will be enough for us, for the true teacher is satisfied when he has made other men worthy of undying fame.

COLLEGE AND HIGH SCHOOL DEPARTMENT.

REPORT OF DELEGATE OF THE COLLEGE AND HIGH SCHOOL DEPARTMENT TO THE DOMINION EDUCATIONAL ASSOCIATION.

W. J. ROBERTSON, B.A., LL.B., ST. CATHARINES.

Meeting held at Halifax, August, 1898.

To the President and Members of the College and High School Department :

Through the kindness and spirit of self-sacrifice of R. A. Thompson, M.A., President of the College and High School Department, I was permitted to attend the Dominion Association Convention held last summer at Halifax, as your delegate. The oppportunity thus afforded me of seeing something of the Maritime Provinces, and of studying at close quarters their educational institutions and methods, was not one to be lightly passed by, notwithstanding the fact that the weather at the time was very warm, even at Halifax, which boasts itself somewhat of its temperate and invigorating climate.

It is not my duty to give my impressions of the country or of the people down by the "sounding sea" (the expressive phrase of the Blue-nose orators), although much of interest might be said of that portion of Canada, which, in the common every-day language of their people, is not Canada. A very brief synopsis of the doings of the educational gathering, which crowded the halls of Dalhousie College during the day, and the Academy of Music, in the evening, will be all that I will attempt just now.

As already implied, the attendance at the Halifax Convention was very large; in fact it was much the largest educational gathering, purely Canadian, that has hitherto met in Canada. Every room and hall in Dalhousie College was crowded with an enthusiastic and intelligent throng, anxious to listen to the addresses delivered and papers read. This large attendance was com-composed, in the main, of teachers from the Maritime Provinces.

Quebec had a fair representation of teachers and educationists present. Ontario a very small number; but in this case *quality* in a measure atoned for *quantity*.

The organization of this Convention was not of the best; a fact which which is partially explained by the peculiar character of the Dominion Association itself. Meeting irregularly, and at comparatively long intervals, with an Executive scattered over the whole Dominion, it is not at all surprising that some details should have lacked completeness. Nevertheless, the Convention was thoroughly enjoyable—more than that, it was inspiring. The proceedings were much the same as we have at our Ontario Educational Association gatherings every year. Departmental meetings were held during the day, at which numerous and valuable papers were read, followed often by lively and intelligent criticisms. The evenings were devoted to great gatherings in the Academy of Music, where we freely perspired, and in the intervals of face-mopping listened to an abundance of sage advice from theoretical educationists, who generally assume that experience is of little value in the teaching profession. To speak candidly and truthfully I must confess that these evening gatherings were, like our own,—"Vanity and vexation of spirit."

It would be impossible to begin to enumerate, much less to criticise or analyze the papers and addresses given at this Convention; anyone curious to know what "a feast of reason and flow of soul" we enjoyed should secure a copy of the proceedings which will be published very soon. But I may say that the representatives from Ontario had their full share of the work of the Convention, and upheld, I trust, the fair fame of Ontario educationists. I can speak from personal knowledge of excellent papers by Dr. Kirkland, and Prof. Reynar; and I heard most favorable reports of those given by the other essayists. The range of topics discussed was very wide, covering nearly every department of educational work, and discussing not only technical questions, but also the broader questions of educational history and policy. We were, in the higher education department, favored with a most lucid and charming paper by Miss E. Ritchie, of Wellesley College, who discussed in an admirable way the knotty problem, "the higher education of women." I make special mention of this paper, because it led to a most animated and witty discussion in which the lady teachers present exhibited marvellous powers of repartee and eloquence, to the great confusion of our clumsy masculine intellects.

And here, it may be not out of place to point out the close and living connection between the schools and colleges of the Maritime Provinces and the better endowed and equipped colleges and universities of the Eastern States of the American Union. The limited means of colleges like those of Sackville, Wolfville, Fredericton, and Halifax, must necessarily confine the work done to a more narrow range of subjects, and to a lower standard of attainments than ambitious students hold desirable. This leads to post-graduate courses in American universities, and hence to the establishment of strong bonds of friendship between the the teachers of the Maritime Provinces and those of the Eastern States. It is American influence which counts in educational circles in Eastern Canada, not that of Ontario, in spite of her boasted perfection. Yet, our brothers and sisters down by the Atlantic are fully as loyal, and even more British in customs and sympathies than we in the West.

Beyond the pleasure of listening to well-prepared papers and addresses it may be asked what special benefit resulted from this Convention? Placing aside the undoubted gain educational interests received by the broadening of the mental horizon of every observant teacher present, and the knowledge acquired of different educational systems and policies, I may mention the following direct resesults:

(1) The Dominion Association formally endorsed the scheme of having a day set aside each year for celebrating the greatness of the British Empire. This suggestion has been acted on in Ontario since then, and henceforth we will keep with great fervor and imperial patriotism, "Empire Day."

(2) Certain long-delayed reforms were discussed and committees appointed to devise ways and means to promote them. I refer to the introduction of the metric system, reforms in spelling, and the discovery, if possible, of some simple and intelligible system of shorthand.

Of these projects, the one which, it appears to me, is the most feasible and useful, is the introduction of the decimal system of weights and measures. Other subjects were much discussed, such as "a national bureau of education," but nothing definite resulted.

In concluding, allow me to point out that the Dominion Educational Association cannot, as it is now organized, do the work we would like to see it doing. It is not in any sense a body of representatives or delegates, and its attendance is necessarily, on

account of the "magnificent distances" of our Dominion, an uncertain and varying quantity. Could some scheme of representation from our county or local associations be developed, the power of this Association in broadening our educational ideas and in intensifying our patriotism, would be greatly increased.

Every delegate to the Convention must have returned home with pleasant recollections of the kindness of our Halifax hosts, and enduring memories of the noble harbor and delightful gardens which are the pride of the Haligonian. We had very warm weather it is true, but the sense of personal discomfort was rendered more than endurable by the warmth of our greeting, and the efforts made to make us feel we were of the same "kith and kin," fellow-citizens of our great Dominion and fellow-workers in building up a great Canadian Empire.

THE EDUCATION DEPARTMENT'S FETICH.

J. C. ROBERTSON, B.A., VICTORIA COLLEGE, TORONTO.

The mistaken but slavishly followed principle to which I shall call attention, and to which I think many of the most unsatisfactory features in our school system are due, may not be the sole and single source of all that is objectionable in the working of this system; I do not profess, that is, that I am going to lay bare the complete and only root of original sin, still less that I have some sovereign panacea to offer.

Let me say further that any weight this paper may be found to have will come neither from the writer's personality nor from any ability of his to express his views clearly and forcibly, but solely from the degree to which the paper will be found to give expression to the views of many—I think most—of the High School and College teachers in the Province. Most of these are as capable as I of the task of expressing the very general feeling of dissatisfaction and unrest, very many more capable; but caring little whether or not I was the most capable exponent of the general dissatisfaction, I merely determined that, where no one else seemed likely to speak out and to speak plainly, I would.

I desire, above all, to put what I have to say so plainly and in so straightforward a way that there shall be no doubt what are the points I am trying to make; so that, in case any attention should be paid to this morning's discussion (and we teachers are not in the habit of having much attention paid to our views even on educational matters)—in case, I say, any attention should be paid to this morning's discussion, that there may be no mistaking just what the discussion is about, no beclouding (whether intentional or unintentional) of the point at issue.

The title of my paper implies that the Education Department is following blindly some idea which it has unwisely exalted to a universal principle, some idea which may be a good servant, but which is proving a bad master; and it implies also that there are noteworthy evils resulting from the slavish worship of this fetich. This is not the place nor the occasion to inquire whether this mistaken principle is the sole or the chief source of existing evils; there may be contributing causes; for example, the necessities of our

young country, as yet only in process of development. Still less is this the place or the occasion to inquire how far there may be personal characteristics in those who determine our system that account for some things, or to ask whether political exigencies, or love of authority, or the fascination of fads, or that somewhat unclean spirit, the Zeitgeist, have anything to do with the matter. This is not for us to-day a political question, or a personal question, but an educational question; although under our system it has become almost impossible to separate education from politics; and very petty politics at that.

The curse of party politics is that one who seeks to take an effective part in civic life must take sides, and stick to his own side through thick and thin. The two opposing parties are divided like the sheep and the goats at the last judgment; both parties are agreed that on one side are the sinners, on the other, the saints; they differ only on the point whether it is the sinners or the saints that have been adjudged worthy respectively of the heaven of office, and what are euphemistically called the cool shades of opposition. And so we find one party vehemently attacking the Education Department and blindly refusing to recognize that it has its good points and has done good work; and the other party as vehemently defending it, and as blindly refusing to recognize that it has also its weak points and has sometimes done bad work.

The result is that the teacher exclaims, "a plague on both your houses!" and finding himself unable to sympathize fully with either side, and also unable to influence either side, he tends to become not apathetic but hopeless and discontented, or sometimes even cynical and pessimistic; and many a teacher who votes for the Liberal party at election times feels no stronger approval of the Government's educational policy than such as springs from the feeling that "it is better to bear the ills we have, than fly to others that we know not of."

So to-day, while I shall criticise certain features of the Education Department's policy, I wish to avoid the falsehood of extremes, and readily acknowledge that the Minister of Education is not as black as some people paint him, that we owe much to him; and, to come to particulars in one respect at least, let me say, as emphatically as I can, that the oft-repeated charge that he has bribed the teachers to silence by the Departmental Examination fund is utterly baseless. The opposition's charge was, I believe, as short-sighted and impolitic as it was false. To be sure, it is a

charge that one hears less seldom now, but it has never been retracted, that I know of, by a single opposition speaker or journal that ever made it. If some journals had ever during the last few years been as interested in reporting the discussions at these High School masters' meetings as they are in reporting many utterly trivial and transient affairs, they would speedily have discovered that the teachers' mouths have not been closed, and perhaps they might also have discovered some more forcible objections to the Department's policy than many of those they have evolved out of their own inner consciousness.

Now this has been perhaps too long a series of preliminary remarks, but when one proposes to deal with so ticklish a matter, he may well be allowed more than the usual prelude of humming and hawing.

I readily admit at the outset that my criticism rests in great part upon an assumption which I do not intend to spend any time in proving or supporting. Whoever undertakes to examine into the causes and connection of unsatisfactory conditions assumes the existence of unsatisfactory conditions, and I am going to assume that dissatisfaction and unrest exist in connection with our school system. I do not mean among the general public, for apologists for the Department might ascribe dissatisfaction of this sort to politics or ignorance or some other such cause, and that is a matter I am not now concerned with. No, what I mean is that dissatisfaction and unrest of a deplorable character exist to a deplorable extent among the High School and College teachers of this Province.

It is not enough to answer loftily that a divine discontent is a necessary accompaniment of progress, that every man with a high ideal is dissatisfied with his present attainment. There are two kinds of dissatisfaction; one, healthy and optimistic, that of the man who confesses "not that I have already attained, but I press forward," and who is calmly confident that in spite of failures and shortcomings he is on the right track; and there is another dissatisfaction that is rather hopeless than confident, exasperated rather than calm; a sure sign that something is wrong; and it is this latter kind of dissatisfaction that I shall assume exists among High School and College men, a dissatisfaction which does not believe that things are going quite in the right direction, and that on the whole the Department and its offspring, the schools, are doing as well as might be expected; which declines to put away all doubts and forebodings, and repose serenely confident in the thought, "Our Educational Father is at the helm."

This assumption, I have said, I do not intend to spend any time in proving or supporting. If any one feels disposed to challenge the justice of the assumption, I simply appeal to you yourselves—the College and High School teachers—you who are from the very necessity and nature of the case the sole and final judges whether or not it is a fact that there does exist among you this undesirable unrest and lack of confidence, this dissatisfaction with certain important features in the working of our school system. I do not think the result of such an appeal would be to show that I have but discovered a mare's nest.

Without spending any time then in trying to prove to you that your shoe is pinching, let me at once proceed to state that in my opinion a very considerable portion of the pinching has been caused by the excessive emphasis upon uniformity in our system.

It was at the very beginning of the present *régime* that the principle of uniformity first made its appearance. When the present Minister came to office some fifteen years ago or so, there were certain problems pressing for solution; three that I remember: the great variety in the requirements for various University and professional matriculation examinations, the school-reader muddle, and the University problem. In all these the Minister's solution was in the direction of consolidation and unification. Whether University confederation was the ideal solution of the last-named problem may still be a moot point. But there is no doubt that in the other two matters the Minister took exactly the course he should have taken, and he has ever since displayed a justifiable, if somewhat tiresome, pride in his achievement.

Perhaps because of his success in these matters, at any rate, he has ever since devoutly believed in this principle of uniformity. And so the present *régime* may be characterized as the apotheosis of unification; dovetailing has been the supreme science of educational government, and, with one exception, that I shall come to later, the Minister is never so happy as when killing at least two birds with one stone. How often in his speeches does he dwell on the one grand system that leads from the kindergarten to the University—"Is not this great Babylon that I have built?" And the *Globe* regards it as the great glory of our school system, the one great object to be kept in view, that there shall be no waste from unnecessary duplication. Now, apart from the error of confounding continuity with uniformity, it does not do to exalt any one

principle to so dangerous a pre-eminence. To repeat an expression I have already used, this uniformity may be a good servant, but it is a bad master. The Minister apparently forgets that one can have too much of even a good thing. And one has often the feeling that the Department's tendency in regard to new proposals is not to consider them on their merits, but, above all, to see how they will fit into the system.

Let us take a few examples of the way in which this uniformity works evil and leads to justifiable dissatisfaction.

There are in our High schools at least three distinct classes of students: those preparing to become Public School teachers, those preparing for the University and the professions, and those who wish to obtain more mental training and more culture before going out into the ordinary non-professional walks of life. It is *a priori* improbable that it should be best for all these to have the same mental food, the same discipline, the same tests of fitness. And, until this has been proved to be the case, it should be the Department's object to discover and provide what each separate class needs. At present we have a curriculum and an examination system which are not the proper ones for any one of these three classes. In trying to suit all, the Minister has suited none. Some people are fond of saying that 95 per cent. of the pupils are being sacrificed to the other 5 per cent. I will assent, if they will also add that the 5 per cent. is at the same time being sacrificed to the 95 per cent. What would our farmers think if the Minister of Agriculture were to become converted to his colleague's idea, and should go up to Guelph and order all the experimenting on different kinds of foods for different kinds of animals to cease; if he were to say to President Mills: "Come, now, we must have uniformity on this farm; it is all nonsense to have a different diet for horses and cattle and sheep and pigs; it is an enormous waste of time and leads to objectionable duplication; they must all take the same food"?

This, then, is the first evil result—unsatisfactory courses of study for each of the three classes of students; the second is over-pressure. On the common bill of fare for all the students are placed some subjects that the matriculant wants but the teacher does not, and others that the teacher wants but not the general student. To the undue assimilation of the matriculation and the teachers' course of study is traceable much of the justifiable complaining about over-pressure in the High schools. I need not elaborate the point; you all know the evil. It is useless for the Department to disclaim

all responsibility for the existing over-pressure, to which the Ontario Medical Association bore such striking testimony last year. Undoubtedly it is in part due to causes which the Department cannot control; but, even so, the Department so completely determines the conditions under which the pupils work that it will take something more to relieve it of responsibility than the good advice contained in the circular dealing with this matter which it subsequently issued.

Similar evil results arise again at the point where the pupil enters the High schools. I can see various strong reasons for providing for continuation classes and a Public School leaving examination. If the Department had stopped there, little harm, and perhaps much good, would have resulted. But no—here was a fine chance for some artistic dovetailing; and scarcely anything in recent years has caused so much disorganization in the High schools, and so vexed the souls of hard-driven headmasters, as the provision by which a course designed to round off the education of those who are not going to have a High School training is made to do service as a preparatory course (and an utterly unsatisfactory one) for advanced High School classes. If the Minister wishes to see how illogical this procedure is, let him repeat to himself the reasons he has advanced for instituting these Public School courses, and then add immediately, "And therefore it follows that the students who take this course are *ipso facto* qualified to enter Form II. or Form III. of the High School."

And at a later point the same assimilation of courses yields unsatisfactory results, though the evil is not so crying. The University may be benefited in attendance and fees, but in some other ways it is harmed by the manner in which the B.A. degree is connected with the non-professional teacher's certificate. That the possession of a degree is not in itself a sufficient guarantee of the possession of the exact kind of scholarship required for High School teaching is not difficult to prove. And, in perhaps a slightly irregular way, the High School masters who examine in methods for the Normal College act on this belief. They seldom, if ever, set a paper on methods that is not also intentionally made a test of scholarship too, and in some cases it has been scholarship alone they have sought to test. I shall not dwell on the way the University is harmed, except to appeal to any University teacher present whether it conduces to proper work, and the keeping of a right ideal before students in college, to have so many of them caring

only for the degree, however secured, just because it has a market value, and not at all for the mental culture to be obtained by a college course.

Again, it is not in the courses of study alone that a vicious uniformity exists, but in the standard also. What magic is there in the 33 percentage that it should be made the ideal for students to aim at from the time they enter the High School till their education is ended? Why, for example, should the prospective teacher not be required to take a higher percentage in some subjects at least? If there is much poor teaching in the Public schools, we will say in arithmetic, what else can you expect when many of the teachers never got much over 33 per cent. on any arithmetic paper in their whole course? There are some things of which the teacher should have a 100 per cent. knowledge, and yet of which one can never be sure that he has even a 50 per cent. knowledge.

Some prominent business men complain of the wretched spelling and arithmetic of the pupils who come into their banks and warehouses. And what wonder? They never had to get more than 33 per cent. But the merchant does not want an accountant or salesman who calculates the right amount only one time out of three, or a secretary who can take only 33 per cent. on a dictation paper. If for certain examinations on certain subjects a higher percentage could be required, then a much better test could be made (not necessarily a harder one), and pupils would not have the debasing suggestion constantly before them that if they half know a thing they are quite safe—with even a considerable margin to the good.

It may be objected that if there be a variety of courses in the High schools, it will become impossible to arrange a time-table. I should be content to leave the matter to the verdict of the teachers. I imagine that if there were a little less uniformity and restriction, and a little more freedom and individuality, the headmasters would not boggle at the time-table. It is not as though they had such easy work with time-tables under the present arrangement.

Complaint is often made that all individuality is repressed under our present system; and this is true of the pupil, the teacher, and the school. If the Department would recognize more fully the needs of various classes, and were not so enamored of uniformity, there might be evolved in time various kinds of schools as local conditions required, and we should not find every school in the Province doing exactly the same kind of work in exactly the same

way. For the University and the professions there would be one course, with necessarily, for honors at least, a certain number of options. But for the teacher's course, why should there be half a dozen options? The Public School course is perfectly definite and should be definite; you cannot specialize much there. Does it not follow that there should be discoverable some one course, fixed or more nearly fixed at any rate than now, to prepare those who are to teach in the Public schools? But as for the third class of students, those preparing for other walks of life, why not leave a great deal to local opinion and the individual headmaster's judgment? Conditions vary in this wide Province; the training needed in Toronto may not be the best for Cornwall or Port Arthur. And perhaps more real interest would be aroused in educational matters if more real power were given to local authorities to determine the studies that will fit pupils for the various local conditions of commercial or industrial or agricultural life.

But, it may be said, is that not just what the Bill introduced at the last session of the Legislature is going to do? Not at all. This Bill will allow local authorities to decide which of several courses prescribed in minute detail by Departmental regulations shall be taken in each school. That is quite different from allowing the local authorities and the headmaster to arrange suitable courses themselves, subject of course to Departmental approval. Government inspection could always be a check upon foolish or short-sighted local regulations; and such inspection could be made very effective and very helpful without at all becoming merely an attempt, in the spirit of a martinet and dictator, to see that above all things certain regulations of the Department or ideas of the inspector are rigidly enforced.

But will all this diversity not lead to greater cost, and, therefore, be unpopular with the taxpayer? I do not think so, though here I cannot go into detail But even if in certain cases there should be a slight increase, I think it is the fact that men who will grumble at the excessive cost of a thing they do not want or do not really like, will pay willingly when they are getting what does suit them.

Let the authorities in the Department study carefully the principles underlying the new legislation on Secondary schools in England, and they will find that local independence is carefully provided for, that abundant room is left for the cultivation of individuality, on the principle that, to borrow Prof. Jebb's expression, a living chaos is better than a dead cosmos.

And then let these authorities study some parts of that remarkable book by Edmond Demolins, the great French sociologist, on "Anglo-Saxon Superiority"—a book that ran through a dozen editions at the very time when France was excited by the Dreyfus affair and embittered against England by the Fashoda incident; a book that was generally recognized in France as telling unpalatable but wholesome truths. What does Demolins regard as the great cause of French inferiority to the Anglo-Saxon? Why, nothing but the rigidity of the system of paternalism, beginning with the schools and running all through the social fabric; while throughout life the Anglo-Saxon cultivates a spirit of independence and self-reliance. The connection between this and my subject is not far-fetched, for Demolins himself devotes several chapters to a comparison of the schools of the two countries, and finds the same significance there, and the evil conditions he calls attention to in France are singularly like some things existing here in Ontario.

Speaking of the new proposals in England, the London *Times* said last month: "Our educational system, like many other English institutions, has been constructed by a fortuitous, piecemeal and haphazard process. It has grown up, no one knows exactly how. It has not been imposed from above, as in some continental countries, by a department of State, and perhaps for that very reason its life, though not perhaps sufficiently regulated and directed, is in many respects a vigorous life." The *Times* then proceeds to point out the evil of "too rigid an application of central government to that peculiar growth of English soil, our great Public schools. They do much to encourage that type of character that has made Englishmen more successful than any other nation as merchants, as adventurers, as colonists; that manly, outspoken type that will do its duty and fear no responsibility." The *Times* points out that under the government's proposals (which have been several years in framing) there is, however, no danger of these schools being "bound hand and foot by the inevitable red-tape of a government department," and it concludes by saying, "There is no doubt that if the liberty and independence of action, under which our great Public schools have lived and worked, and attained their present unique position in the national life, were seriously curtailed by any reforms of organization, the result would be loss rather than gain to the cause of national education."

The point I wish to make in this connection is that, though we boast to be Anglo-Saxons and to have the Anglo-Saxon spirit, yet,

from the nature of our constitution and our history, our system of education approximates very closely to the continental, not to the English. It has been imposed from above by the State, and has not grown up of itself. Therefore there is all the more need that we work, not in the direction of greater uniformity (which may be desirable in England), but in the direction of greater freedom and individuality, a lesson that they are learning in some measure in France, where also it is much needed.

What possible chance is there under our system for the growth of a strong institution, with a character of its own, leaving a deep impress of individuality on all who pass through it? Our system is too much like a gigantic machine. It is a pity and a shame that most of our teachers feel so keenly that they are parts of a machine; it is a pity and a shame that we should so often be told by those who can compare our schools with those of England and Scotland, that the great defect in the products of our system is, as we might expect, lack of individuality.

But in conclusion it may be objected that there is a fine antidote to this evil of uniformity in the erratic and frequent changes in the Departmental regulations; that the teachers certainly cannot complain of monotony. Every teacher here knows, however, that this itch for change has aggravated the trouble, not mitigated it; that if no new regulations had been issued for the past five years we should probably be better off than we are now.

The Minister doubtless thinks that all this is necessary to avoid stagnation, "lest one good custom should corrupt the world"; he forgets that progress is more than mere restlessness. One thinks of Dante's rebuke of the fickle city of Florence:

"Think in the time thou can'st recall,
Laws, coinage, customs, places all,
How thou hast rearranged,
How oft thy members changed!
Could'st thou but see thyself aright,
And turn thy vision to the light,
Thy likeness thou would'st find
In some sick man reclined;
On couch of down though he be pressed,
He seeks and finds not any rest,
But turns and turns again
To ease him of his pain."

This restlessness is a sign of disease, and not of healthy growth. Too many cooks, we are told, spoil the broth; but one cook also will

spoil it, if he is continually taking it off the fire to add some new ingredient, or try how it will do in a new vessel. But why, someone perhaps may ask, why be so inconsistent as to object to this continual succession of new regulations, and yet yourself advocate changes? I wonder if there is anyone who supposes that if this association were to adjourn *sine die*, and the teachers should preserve absolute silence, that would put an end to this eternal tinkering. There is a difference, too, between incessant changes that lead nowhere, and one change that would leave the school system afterwards free to develop along natural lines.

You all know the old Greek story of Procrustes, the robber, who made all who passed his way lie upon his bed. If they were too long he lopped off their limbs; if they were too short he stretched them out to the proper length. All had to fit the same standard. We in Ontario are in like condition, only our Procrustes is very restless and continually altering the length of his bed. Naturally, when he lengthens it, all the tall men of the neighborhood approve, and the short men object, and when he shortens it the opposite takes place. Now many, perhaps most, of our educational squabbles are just between the advocates of long beds and short beds, it being at present impossible to have both. There is no other reason for the bad feeling and jealousy existing between Public and High School men; all would go well if each were allowed to do his own work in its proper place; but the attempt to provide at the same time for Public School leaving work and the needs of the High School on the principle of unification and dovetailing has failed. And a similar jealousy is, I am sorry to see, springing up in some quarters between High School and University men, simply because of the excessive amalgamation of the teachers' course and the matriculation course. This jealousy between various sections of teachers is not the least of the evils resulting from the uniformity fetich.

Finally, I may be told, in a phrase we have all of us heard before, that all this may be quite reasonable and very desirable, but "you will never get the Minister to consent to that." Probably not, gentlemen; that is why I have spoken of a fetich.

MODERN LANGUAGE SECTION.

ENGLISH PHILOLOGY IN HIGH SCHOOLS.

J. W. CONNOR, B.A., BERLIN.

Caxton, as you remember, says, "We Englishmen be born under the domination of the moon." Had he been an Ontario man, he might as justly have complained of being under the domination of the pendulum. As we had next to no Latin before 1865, compulsory Latin till 1871, then almost no Latin, then all but compulsory Latin, so in English we have swung from examination papers, and, therefore (tell it not in Gath), teaching involving everything in general about English, to mere analysis and syntactical constructions; and many of us think our last state is worse than the first. We have had rhetoric, and now it is to be dropped for the excellent reason that it does not make a good examination subject. Whether it is a good subject for intellectual training, for cultivating in boys and girls a feeling for style and finish, is, of course, too trivial a consideration to detain us. Great is Examination and we are his prophets.

This eulogy of examination is called forth by the question that at once presented itself to my mind, when considering how I had better treat this subject, whether I should consider what our pupils should be taught or what they can be examined upon. Is it not a lamentable fact that it is now taken for granted that nothing will be learned in school unless it is prescribed for examination—nay, even that any part of a subject will be neglected if it is thought unlikely to find a place on the year's examination paper. However, as mathematicians pursue their investigations, neglecting at first such considerations as the extensibility of strings, friction, and so on, it will be best to consider, first, what ought to be taught under an ideal High School system, and then to make allowances for the friction, etc., of our present not quite ideal system. It will be admitted that, while individual masters honestly try to teach English Grammar as they think it should be taught, the general

run of teaching conforms pretty nearly to the style of work indicated by the examination papers of the last few years.

Let us then consider what it is desirable to add to the standard indicated by recent papers. At least these:

1. The ability to explain what pupils mean by technical terms they use so freely and often with so little intelligence. Now, it is not meant that questions should be asked that can be answered by quoting a definition. That, I hope, we shall be exempt from. But a pupil should be subject to constant cross-examination as to his reason for using such terms as "apposition," "object," etc. If any one doubts the need of this, let him try a few cross-questions. If he does not get some strange answers from some of the class, then his work has been well done. No doubt, all that take enough interest in our work to be here, do so; but late examination papers do not encourage the practice; the 33 or even 50 per cent. can be got with the help of *who* and *which* clauses and other windfalls for the unintelligent.

2. Now that it is proposed to take rhetoric off, there should be some practical syntax; not expressions that purists object to, but those that offend against clearness or other qualities of style.

3. There should be some teaching of historical grammar beyond that presupposed by the one question per year heretofore set. Questions on the general history may foster cramming, but incidental questions on peculiarities occurring in the passage on which the other questions are set, would test knowledge of historical grammar. At present I would not insist on minutiæ. But nobody knows English Grammar who does not know, for instance, how we come to have plurals of the type of *oxen, kine, children*, third singulars like *can* or *dare*; and similar anomalies. To those who agree with me that the unconscious action of mind and body in shaping language is no less worth study than the conscious efforts that have produced literature, no argument on this point is needed; but those who look upon literature as the end to which everything else is to be subordinated, may well consider whether knowledge that will prevent young students from looking down upon the "bad grammar" of Shakespeare and early modern authors, or from mistaking the meaning of *other* used for *others*, is not a useful help to the immediate enjoyment of the thought.

Once more: if the analysis of the sentence and the specifying of the relations of its parts is a useful mental exercise, so useful as to form the staple of our grammatical teaching, why should not word-

analysis have its place? And why should not the student be furnished with the material needed to analyze also a fair proportion of the foreign element in the language? Everybody etymologizes; everybody must, willy nilly, etymologize. Then why not train students to do so on sound principles? This involves also some teaching of phonetics. For this a good foundation is laid in the excellent little work of Mr. Burt, to which I am glad to have this opportunity of paying a tribute.

We are now dealing with the subject that I have been set to write upon. For as soon as we leave the *what* of language and deal with the *how* and the *why*, we are teaching philology. This is unavoidable. The only question is whether our philology is to be scientific and leading towards truth, or unscientific and inculcating error. It is the former that I am here to recommend.

Now, in the scientific study of any object we must view it not only in its self but in its external relations. Hence the student should know the exact relation of English to its continental kin. This fits in well with the beginning of English history, the Goths being the cause of the withdrawal of the Roman garrison, and their nearest linguistic kin, the Danes, being well known to the student. Then there is needed only a plain account of the West Germans and the comparatively late development of High German, with a caution against deriving English words, outside of a very small number, from German.

But we need to go one step further. We cannot ignore the relations of English and its Teutonic kin to the wider Indo-European or Arian family of languages. And here we need Grimm's law. Thus, though it has grown on the one hand more complex by the additions needed to cover seeming exceptions (such as Verner's Law), it can now be freed from the complication caused by treating what is now known to be the second shift, separated by centuries from the first, which alone concerns English. Unless we choose, we need not say one word about the High German shift, though where a fair proportion of the class have any knowledge of German, it is advisable to do so, both as a caution against deriving English from German, and as a preparation for the study of the first consonant shift. Nor would I advise going into minutiæ in teaching the first shift, though the main feature of Verner's Law should be stated and illustrated by familiar modern instances; as, for example, the origin of the voicing that takes place in *of*, *with*, the inflective *s*, or the relation of *forlorn* to *lose*.

To sum up, what I would recommend for High School classes in general is:

1. Such thorough teaching and examination as ensure that Grammar shall not be mere word-mongering.

2. Historical grammar, as far as will explain the great change from a synthetic to a mainly analytic language, and also the origin of existing forms and peculiarities.

3. Word-analysis, beginning but not ending with native English words, and elementary phonetics.

4. A knowledge of the external relations of English, together with the essentials of Grimm's and Verner's Law. To this I should like to add for Fourth Form classes the reading of at least Chaucer's "Prologue," or of one of his shorter tales, and, to illustrate the earlier stage of the language, a few sections of Sweet's Anglo-Saxon Primer. Many of us have no doubt regretted the disuse of the former; and that even young boys who have read Chaucer will read the latter with interest, I know from a class that took up the work after school hours.

So much for what is desirable. But what is possible under the examination system? That will depend on the programme set forth by the University and on the practice of the examiners. If the former is left as it is in the proposed curriculum, then analysis and construction will continue to be the be-all and the end-all of grammatical teaching. It would therefore seem advisable to ask the Senate to prescribe in addition to the topics in the proposed curriculum: History of existing inflections, word-analysis, relation of English to other languages.

GERHARDT HAUPTMANN UND DIE VERSUNKENE GLOCKE.

W. H. VANDERSMISSEN, M.A., UNIVERSITY COLLEGE, TORONTO.

Robert Gerhardt Hauptmann wurde am 15 November, 1862, zu Obersalzbrunn im schlesischen Riesengebirge geboren, steht also jetzt im 35 Lebensjahre und schon seit neun Jahren in der Vorderreihe der dramatischen Dichtung in Deutschland.

Es wird lehrreich sein, zuerst einen kurzen Abriss von dem Bildungs-und Entwickelungsgange des Dichters zu geben. Auf dem Gymnasium war er ein so schlechter Schueler, dass der Vater ihn bald aus der Schule nahm, und zu einem Oheim auf das Land schickte, wo pietistische Eindruecke ihm die christliche Welt-und Lebensanschauung stark verleidete. Dann wollte er Bildhauer werden, und bezog die Kunstschule in Breslau, wo er aber bald "wegen mangelhaften Stundenbesuchs und geringer Fortschritte" relegiert wurde, und seinen Kursus nicht beendigte. Spaeter ging er dann auf die Universitaet Jena, wo er ebensowenig Fortschritte gemacht zu haben scheint. Dieses Auflehnen gegen jede geregelte Thaetigkeit, dieser Wiederwille gegen Fleiss und Ausdauer erinnert an den "Sturm und Drang," und weist zugleich auf die Ursache jenes noch immer, trotz der grossen Erfolge, unvollkommenen Gelingens, jener Unfertigkeit und Halbheit, der wir in seiner spaeteren Entwickelung begegnen. Der Misserfolg in der plastischen Kunst ist zugleich bezeichnend fuer seine Dichtkunst. Haette er seinen Goethe besser studiert, so haette er lernen koennen, dass ohne strenge Selbstzucht kein vollkommenes Kunstwerk moeglich ist.

Im Jahre 1883, machte Hauptmann eine Seereise nach dem Mittelmeer, und das auf dieser Reise Erlebte gab Anlass zu seinem ersten im Druck erschienenen Gedichte: "Promethidenloos," einer poetischen Reisebeschreibung im Stile des "Childe Harold" von Lord Byron. Das menschliche Elend, das er besonders in Neapel gesehen, gab ihm die Richtung, die sich in seiner Dichtung zeigt —er wurde der realistische Schilderer "des Weltwehs und der Himmelssehnsucht." Schon damals fand er das Wort: "So muss Natur der Kunst die Wege bahnen," und das andere Wort:

> "Und wollt ihr meines Gottes Namen kennen,
> So moegt ihr ihn den Gott der Wahrheit nennen"

um seine poetischen Grundsaetze und Ziele zu bezeichnen.

Schon damals rief er den Elenden zu:

"So lasst in eurem *Schmutz* mich hocken,
Lasst mich *mit euch im Elend* sein."

Und das hat er in seinem ersten Drama getreulich und gruendlich gethan, wie auch in den spaeteren, so weit es wenigstens der zweite Vers verspricht.

Wenn er sich aber die Wahrheit zur Goettin erkor, so bewies er nochmals, dass er seinen Goethe nicht verstand, indem er "der Dichtung Schleier" aus ihrer Hand verschmaehte.

. . . . . .

Das Jahr 1890 brachte zwei Schauspiele von Hauptmann: "das Friedensfest" und "Einsame Menschen." Ersteres hatte den Nebentitel: "eine Familienkatastrophe," welcher fuer beide Dramen bezeichnend ist. Die Personen im "Friedensfest" reiben und zehren einander auf mit Eigenschaften, die ihnen angeboren sind, und denen sie nicht entgehen koennen. Es ist dies ein Schicksalsdrama im modernen Sinn, wie Goethe's "Wahlverwandtschaften" ein Schicksalsroman ist. Sind hier die Handelnden die Sklaven ihres Schicksals, so sind die "einsamen Menschen" schon mehr die Schmiede ihres Ungluecks. Es ist die Tragik der Nervoesitaet. Der Held ist ein moderner nervoeser Mensch. Man koennte ein Parallel ziehen zwischen ihm und Werther—sehr zu Gunsten des letzteren. Beide sind Schwaechlinge. Werther geht zu Grunde, weil er stets seinem Herzen den Willen thut—aber liebenswuerdig ist er im hoechsten Grade—die Kinder lieben ihn abgoettisch, die Leute aus dem Volke oeffnen ihm ihre Herzen. Er geht an seiner Leidenschaft zu Grunde. Aber dieser Johannes Vockeradt hat kein Herz—er hat statt dessen nur Nerven. Eine Redensart seiner Mutter (freilich in anderem Sinne gebraucht) koennte man auf ihn, wie ueberhaupt auf alle Hauptmann'schen Helden und Dramen anwenden: "Man sieht's ja, er *kommt nicht vorwaerts.*" Und wir, die Leser, wollen doch "vorwaerts kommen." Ein solcher Charakter kann nur im Roman interessieren, nicht im Drama—man vergleiche den Erfolg von Goethe's "Werther" mit dem Misserfolge des "Clavigo" und der "Stella," wo die Helden eben solche unfertige Charaktere sind.

In seinem naechsten Drama, "die Weber," 1892, kehrte der Dichter zum deutschen Volke zurueck, und mit Recht sagt Schlenther: "Nie ist von einem Dichter der Naturlaut des

Heimatsvolkes treuer, inniger, liebevoller erlauscht worden." "Dazu kam noch, dass er hier ein Stueck aus der Geschichte seines eigenen Stammes (denn sein Grossvater war ein armer Weber gewesen) behandelte. Und so fuehlt man mit dem Dichter fuer sein Volk. Hier hat er glaenzender und schoener sein Versprechen gegen die Elenden gehalten, "in ihrem Schmutz zu hocken, mit ihnen in ihrem Elend zu sein."

Wie in Schiller's "Tell" das ganze Schweizervolk in seinem Streben nach Freiheit der Held ist, so ist hier der Held das schlesische Webervolk in seinem kurzen, resultatlosen Aufstande. Und hier mache ich zugleich auf den Unterschied zwischen beiden Dramen aufmerksam: bei Schiller siegt die heilige Sache des Volkes—es ist eine *fertige* Handlung; man "kommt doch vorwaerts"; bei Hauptmann hingegen ist die Handlung fragmentarisch, episodisch—man kommt *nicht* vorwaerts, sondern die alten erbaermlichen Zustaende kehren wieder. Ein Drama aber *darf* nicht Fragment oder Episode bleiben.

Treffend sagt Schlenther: "Der Dichter konnte . . . den dramatischen Entwicklungsgang nicht in der social-politischen Action suchen. . . . Er fand ihn *im menschlichen Schicksal.* Man koennte das Drama ein Schicksalsdrama nennen, nicht ein romantisches, sondern ein *modernes* Schicksalsdrama. Dieses Schicksal schreibt nicht aus hoeherer . . . Willkuer dem Einzelnen seine unabaenderliche Bahn vor, sondern es baendigt und bricht mit Naturgewalt die freie Willenskraft einer Gesamtheit. Durch diese Gesamtheit geht vielgestaltig und wandelbar ein geisterhafter tragischer Held," das Webervolk.

Der Bau des Dramas ist ein aeusserst loser. Von den fuenf Akten haengen nur der erste und der vierte etwas fester zusammen. Aber es sind fuenf dramatische Bilder, von denen jedes einzelne mit der hoechsten Kunst ausgemalt und von erschuetternder Wirkung ist. Es sind fuenf Fragmente eines Torso, wie Schiller das Fragment des "Faust" einen "Torso des Herkules" nannte. Der Dichter hat hier eine neue Form geschaffen, die diesem Werke, wie bei Lessing's "Nathan," durch die Groesse der Kunst das Recht verschafft hat, als grosses Kunstwerk zu gelten.

. . . . . .

Im folgenden Jahre, 1893, erschien "Hannele's Himmelfahrt—eine Traumdichtung." Es ist "die Tragoedie des Weltwehs und der Himmelssehnsucht." "Wie eine Windesharfe," schrieb der Dichter einmal, "sei deine Seele, Dichter! Der leiseste Hauch

bewege sie. Und ewig muessen die Saiten schwingen im Atem des *Weltwehs*; denn das Weltweh ist die Wurzel der *Himmelssehnsucht*. Also steht deiner Lieder Wurzel begruendet im Weh der Erde; doch ihren Scheitel kroenet Himmelslicht." Die Doppelwelt des Stueckes, sagt Schlenther sehr richtig, das Diesseits und das Jenseits, drueckt sich schon in der Ueberschrift aus. "Hannele," sagt derselbe Kritiker weiter, "war nur das hilflose Haeuflein Menschenjammers und Weltwehs. Erst durch die Himmelfahrt befriedigt sich die Himmelssehnsucht." Aus dem Wasser gerettet und von ihrem geliebten Lehrer ins Armenhaus getragen, stirbt sie in Fieberphantasien, in denen sie ihr eigenes Begraebnis erlebt. Von dem Heiland, der die Zuege des geliebten Lehrers traegt, wird ihr grausamer Vater gerichtet, von diesem Heiland sieht sie sich dann als Himmelsbraut heimgeholt, und wird von den Engeln im Triumphzug empfangen. Zuletzt sieht man sie als wirkliche Leiche auf dem Bette im Armenhause liegen —und so endet diese "Traumdichtung," welche von ergreifendster Poesie und wirksamster Zauberkraft ist, mit einem schrillen Misklang.

. . . . . .

Im "Florian Geyer" (1896) wollte der Dichter zeigen, dass er auch im grossen Stile etwas Grosses leisten koenne; aber zum ersten Male in seiner Laufbahn versagte ihm der Erfolg, und das Stueck musste zurueckgezogen werden. Tief niedergeschlagen wie er war, richtete ihn doch bald die Zuerkennung des Grillparzerpreises fuer sein "Hannele" wieder auf. Diese Huldigung gab dem Dichter neuen Mut, sich nochmals an einer grossen Aufgabe zu versuchen, und so entstand "DIE VERSUNKENE GLOCKE—*ein Maerchendrama*." Das Maerchen ist der Inbegriff der hoechsten Volkspoesie, und hier wollte der Dichter noch einmal sein Talent am Hochpoetischen versuchen. Anstatt des "consequenten Naturalismus," Maerchenpoesie und Symbolismus. Verschiedenes klingt in diesem Werke, welches von vereinzelten Schoenheiten foermlich strotzt, in mannichfaltiger Verschlingung durcheinander. Die Maerchenpoesie der Fouqué-'schen "Undine," die gerne eine menschliche Seele haben moechte, wenn sie auch wie die Menschen leiden muss; die Elementarwelt im Nickelmann und im Waldschrat; die Verwerfung des Christentumes in der Buschgrossmutter, die bei den Menschen als Hexe, bei den heidnischen Geistern als Meisterin gilt; der Kampf des alten heidnischen Aberglaubens gegen die neu hereinbrechende Macht des Christentumes; das hohe Streben der Kuenstlerseele

und deren Auflehnung gegen die Schranken des begrenzten, kleinlichen Erdenlebens, welche beide faustisch sein sollen, und doch so schwach sind, dass sie gleich beim ersten verfehlten Anlauf ermatten und verfliegen; dann wieder das vom Dichter selbst Erlebte—die Niederlage und, wie es scheint, die Hoffnungslosigkeit: dies Alles giebt ein buntes Bild von stellenweise wunderbarer und ergreifender Schoenheit—aber es ist doch am Ende wieder die alte Geschichte: man "kommt nicht vorwaerts." Der Held, ein Kuenstler, etwas mehr als Talent, etwas weniger als Genie, welcher Halbgott werden will und es aus Mangel an Kraft nicht erreichen kann, ist ein alter Bekannter: es ist wieder der Johannes Vockeradt aus den "Einsamen Menschen"; statt der Wissenschaft, die diesem keinen Trost, sondern den Tod bringt, haben wir die Kunst, welche dem Meister Heinrich zur Qual wird, und ihn ins Verderben fuehrt. Nicht nur jeder Glaube, und vornehmlich der Glaube an sich selbst, fehlt diesen "einsamen Menschen," sondern Hoffnung und Liebe fehlen ihnen—und daran gehen sie elendiglich zu Grunde.

Der Schauplatz dieses Dramas ist wieder in des Dichters Heimat, das schlesische Riesengebirge, verlegt. Der zweite Akt spielt in des Meisters Wohnung im Thale, die uebrigen auf der Bergeshoehe, Akt I. und V. auf einer Bergwiese neben der Huette der Buschgrossmutter, die anderen beiden in Meister Heinrich's neuer Werkstatt.

Im ersten Akte tritt zuerst auf das "elbische Wesen" Rautendelein, halb nach der Art der Elfen in Shakespeare's "Sommernachtstraum," halb wie die liebliche Schoepfung Fouqué's gedacht, die Maerchenprinzessin, deren verlockende Reize dem Meister so verhaengnisvoll werden sollen. Sie giebt in huebschen Versen ein Bild ihres Wesens (p. 2). Dann ruft sie den Wassergeist, den Nickelmann (p. 4) aus seinem Brunnen, um sie zu unterhalten, will aber nichts von seinem Liebeswerben wissen, und verhoehnt ihn neckisch. Jetzt kommt der Waldschrat (p. 5) dazu (er ist modern genug, Tabak zu rauchen) und berichtet, wie er eine Glocke, welche die auf dem Bergesgipfel neu erbaute Kirche schmuecken und den Sieg des Christentums verkuenden soll, in den Abgrund hinuntergestuerzt hat (p. 10)—der Ton der geweihten Glocke, ist den heidnischen Geistern verhasst (pp. 7, 9). Mit der Glocke ist aber auch ihr Schoepfer, der Meister Heinrich, gestuerzt, und sinkt, zerbrochen an Leib und Seele, bei der Huette der alten Wittichen ohnmaechtig ins Gras. Hier findet ihn die Alte, der dieser Fund hoechst unbequem ist, da ihr Ruf als Hexe ihr schon ohnedem Gefahr genug bringt. Sie uebergiebt den Ohnmaechtigen dem

Rautendelein zur Pflege, dem er von seinem Sturze erzaehlt (p. 15). Bezaubert von ihrem maerchenhaften Wesen, bittet er sie flehentlich, ihn nicht zu verlassen (pp. 16, 17). Die Alte kommt wieder, und sucht Rautendelein ihr Mitleid mit dem zerbrochenen Meister auszureden, da der Tod fuer ein solches "Buerschlein," das "die Sonne nie gesehen," das Beste und allein Moegliche ist (p. 23). So zeigt uns die weise Frau schon im Voraus, dass es mit des sogenannten Meisters Meisterschaft nicht zum besten beschaffen ist (p. 33), dass ihm seine Traeume nie verwirklicht, seine Bestrebungen nimmer erfuellt werden sollen. Der schwer Verletzte wird dann von dem Ortspfarrer und dessen Gehilfen gefunden und fortgetragen. Dann tanzt Rautendelein mit den Elfen den Reigen (und hier klingt die Sprache stark an die des zweiten Teils vom Faust an (p. 36), stiehlt sich aber bald traurig fort zum Nickelmann und macht die Bekanntschaft der Thraene, die erste Frucht ihres Umganges mit den Menschen. Vergebens warnt sie der Nickelmann vor diesen, und hiermit schliesst dann der erste Akt.

Im zweiten Akt finden wir den Helden in seiner Wohnung wieder, wo seine treue Gattin Magda, die er so unterschaetzt und verachtet (wieder ein Zug aus den "Einsamen Menschen) ihm vergebens Trost und Hoffnung einzufloessen sucht. Ihm sind, wie dem Johannes Vockeradt, die haeuslichen Sorgen zuwider und hinderlich (p. 61). Rautendelein schleicht sich verkleidet in das Krankenzimmer und vollbringt mit Kuss und Zauberformel, was der Magda nicht gelang. Nochmals bezeichnet sie ihr eigenes Wesen (pp. 74, 75) und verspricht ihm ihren Beistand bei seinem Werke.

Akt III. spielt, wie Akt IV., in Heinrich's Werkstatt auf der Bergeshoehe. Die elbische Zauberin hat ihn mit ihren Reizen von Weib und Kind und Pflicht weggelockt in ihre Bergeshoehe. Dort sucht ihn der eifrige Seelsorger auf, der Ortspfarrer, welcher nicht glauben will, dass sein Liebling, der auserwaehlte Meister, sich den heidnischen Teufelsmaechten uebergeben hat. Strotzend von Kraft, wie durch ein Wunder geheilt und erneut, findet er diesen wieder. Bald aber merkt er, dass es mit dessen Christentume schlimm aussieht: heidnische Schwuere kommen von den Lippen seines Schuelers, er redet von heidnischen Gottheiten. Das neue Werk, das er schaffen will, beschreibt er (p. 100). Fuer keine Kirche ist sein Werk bestimmt, sondern fuer einen heidnischen Bau, halb Tempel, halb Koenigsschloss, zum Dienste des Sonnengottes (p. 102 ff.). Da der Meister des Pfarrers christlichen

Ermahnungen sein Ohr verschliesst, so sucht dieser ihn erst durch die Schilderung vom Grame seines verlassenen Weibes zu erweichen, und, hier abgewiesen, versucht der entruestete Priester andere Mittel: er droht erst mit dem Volke, und, als Heinrich dem trotzt, mit der Reue (p. 110 f.).

In diesem dritten Akte geschieht zu wenig, und die langen Reden des Pfarrers sowie des Meisters wirken etwas ermuedend. Dagegen geschieht im vierten Akte fast zu viel, und es ist nicht leicht, die Handlung desselben kurz zusammen zu draengen. Wir finden den Meister wieder in der Werkstatt, diesmal an der Arbeit. Sechs Zwerge sind ihm als Beistand zugegeben, aber nur drei weiss er sich unterzuordnen: der vierte und fuenfte sollen doch wohl die Kritiker bedeuten, denn jener fluestert dem Meister eine, wie es scheint, abfaellige Kritik ueber das eben vollendete Stueck Arbeit ins Ohr, worauf er ganz entmutigt antwortet (p. 118). Dann zerschlaegt der fuenfte das Stueck, und der Ermuedete und Niedergeschlagene sucht im Schlafe Ruhe und Erquickung. Die Bedeutung des sechsten Zwerges ist mir voellig raetselhaft. Wollte der Dichter es vielleicht dem alten Goethe nachmachen, und seine Leser blos mystifizieren, indem er ihnen solche Nuesse zu knacken gab? Ich glaube es fast!

Dem Schlafenden suggeriert der Nickelmann, ganz wie ein moderner Hypnotisierer, quaelende Traeume (pp. 120-122). Auf den Hilferuf des Erwachenden erscheint Rautendelein, und sucht ihm mit Schmeichelreden und Liebestaendelei neuen Mut und neue Kraft in die Seele zu giessen. Dieses kurze Glueck wird durch das Herandringen der den treulosen Gatten und abtruennigen Christen verfolgenden Dorfbevoelkerung unterbrochen, die vom stets schadenfrohen Waldschrat herangerufen wird. Heinrich schlaegt siegreich den Angriff zurueck, und vom Kampfe gestaerkt und gehoben wirft er sich wieder dem Liebchen als letztem Trost in die Arme (p. 135). Doch bald erfuellt sich die Prophezeiung des Pfarrers, die Ahnung seiner boesen Traeume. Er fuehlt es: er ist doch nur ein Mensch, kein Halbgott, wie er gehofft und gewollt (p. 137). Schemenhaft erscheinen ihm seine beiden Kinder. Sie bringen ihm in einem Kruge die Thraenen der Mutter, die sich in Verzweiflung in den Bergsee gestuerzt hat, da, wo schon seine Glocke, das verfehlte Meisterwerk, liegt. Diese Scene (p. 140 ff.) wirkt auf dem Theater hoechst erschuetternd. Noch erschuetternder wirkt der mahnende Ruf der Glocke, deren Kloeppel von seinem toten Weibe geruehrt wird (p. 155). Diesem Tone erliegt

er; er flieht, dem Liebchen fluchend, zu den Menschen zurueck (p. 144 f.).

Akt V. Von den Menschen zurueckgewiesen und fortgejagt, zu denen er auf den Mahnruf der Glocke wiedergekehrt war, erscheint Heinrich, bleich, verzweiflungsvoll, gebrochen, wieder auf der Wiese, wo die alte Wittichen ihn zuerst in aehnlichem Zustande gefunden und Rautendelein ihn dem Leben zurueckgegeben hatte. Aber jetzt steht es schlimmer um ihn. Die Alte sagt ihm, sein Tempel brenne nieder, da er sein Werk verlassen, und fuegt den niederschmetternden Ausspruch hinzu: wer steigen wolle, muesse Fluegel haben, "und *deine* Fluegel, Mann, die sind zerbrochen." Dies giebt er, niedergeschlagen und traurig, auch selbst zu (p. 161 f.). Vergebens ruft er nach dem Liebchen, das ihn damals geheilt; durch den Fluch, den er gegen sie ausgestossen, ist sie (wie Undine) der Macht ihres Volkes, der Elementargeister, verfallen, und ist Braut des Nickelmanns geworden. Doch erbarmt sich die Grossmutter noch einmal der Liebenden. Er sieht zum letzten male sein geliebtes Maerchen, und stirbt an ihrem Kusse. Denn das ist das Gesetz der Elementarwelt, dem er sich unterworfen, da siess nach dem gegen sie ausgestossenen Fluche ihn toeten *muss*, sobald er sich wieder in das Geisterrevier wagt (p. 175).

Und so ist auch diese Dichtung, trotz all ihrer Schoenheiten, Fragment und Episode geblieben—man "kommt nicht vorwaerts." Dem Helden fehlt, wie dem Dichter, Glaube, Liebe, Hoffnung. Ibsen, Schopenhauer, Nietzsche haben einen grossen und schoenen Geist verdorben. Moechte er sich doch ermannen und befreien, damit er der Welt etwas Schoenes, Grosses und Vollkommenes statt dieses Stueckwerks bieten koennte! *

* The writer is indebted to Paul Schlenther's essay for the facts of Hauptmann's life. The references to the pages in the drama under consideration indicate the passages quoted, and will be of use to those who may care to read this remarkable work for themselves.

METHODS IN FRENCH AND GERMAN CONVERSATION IN HIGH SCHOOL CLASSES.

W. C. FERGUSON, B.A., LONDON.

It was the intention to have this subject presented for your consideration by three gentlemen, who were to divide it into such headings as would lead to a profitable discussion of it, but owing to the unfortunate illness of my two colleagues we were not able to follow that plan. It seemed good to me, then, merely to speak of some methods of my own, and by so doing, something which may be of practical value in this branch of teaching, may be brought to our notice in the discussion to follow. My consent, moreover, was given rather with the idea of learning from others than of endeavoring to instruct in methods teachers whom I know to be more progressive in such matters.

In speaking of conversation in French and German classes, let it be understood that I do not speak of *ideal* teaching with *ideal* classes, but only of classes in the High schools and of such methods as may be employed under existing circumstances in these schools. Not for a moment, moreover, would I pretend that pupils could be taught in these schools to use the foreign language with fluency and ease as a means of communication, or as an aid to success in the business world. That, no doubt, were a consummation devoutly to be wished, but with the average class of twenty to thirty stirring boys and girls, thirsting (?) more or less for a knowledge of French, with a lesson thirty-five minutes in length five days a week, it is simply preposterous to aim at or hope for such a high ideal. If such a thing were attempted and each pupil received his due proportion of time and attention, he would get from five to eight minutes per week of personal instruction in speaking the foreign language. The mere learning of the language as a spoken tongue cannot be attained except by living among French or German people, if not constantly, at least for a sufficient length of time to receive that constant practice which alone gives an easy command of speech.

But while this is the case, and in my opinion it cannot be controverted, the use of the foreign tongue in the class-room is a most useful auxiliary for the proper study and apprehension of the

language. In fact, so far as possible it should be used for all purposes. But in the present state of our schools and with the manner of conducting examinations that is still in vogue, and is evidently not to be changed, it is difficult to attempt very much, not to speak of accomplishing that effort. Any conversation carried on in a school-room with twenty or thirty pupils, over whom you must also exercise a constraining influence, must of necessity be rather one-sided, and consist largely of questions on the part of the teacher and answers, more or less halting, on the part of the scholar. One unfortunate side of the question also is, that the boy or girl is, in our beginners' class, usually at that stage of development when he or sh is painfully conscious and extremely sensitive to the criticism of other members of the class. Moreover in language classes this seems to be more frequently the case than in classes in Mathematics or English. But an earnest teacher, who is willing to appreciate any attempt, however weak and awkward, is able to counteract, to a great extent, this feeling of awkwardness and reticence.

I have referred already to this bugbear of examinations and the retort might very well be made that in the classes of Forms I. and II. we are now, for the time being at least, free from that dread, and so should be more free to employ any methods which to our thinking might be more interesting and profitable than the old beaten tracks. But while this is true, it is also true that the subject, not being one for examination, receives less attention from the scholar and less consideration at the hands of the head-master. It is also true that the dreaded ordeal looms up at the end of the second or third year's study of French, and of the first or second year's study of German, and woe betide the teacher whose pupils were not drilled and taught with that examination in prose passages, sentences, and translation constantly in view. But why introduce this subject of examination at all? For the simple reason that teachers cannot ignore it, and must of necessity have regard to the material advancement of the pupils as well as to their training in the use and pronunciation of the foreign languages. Now, it has been the painful experience of many a teacher to find that pupils, prepared by a system of good oral training, quick to grasp the thought presented in the foreign tongue and fairly proficient in the use of every-day phrases of conversation, fail miserably when subjected to a test in written French or in the art of translation. For the longer my experience the more firm is my conviction

that translation is an art. To learn to translate well requires constant, careful drilling in the choice of words and in nice discrimination in the use and value of phrases. But, it is said, you do not really understand the foreign phrase if you cannot give its equivalent in your mother tongue. Many a good teacher, in translating, for example, a play like La Grammaire, is frequently at a loss for words to correctly translate into English the idea of the French phrase, and yet by presenting that idea to his class in a roundabout way, finds that some bright scholar can supply a colloquial expression from his vocabulary far more suitable than would be suggested to the mind of the pedagogue. But we have been told by college professors that it is not well to spend time on translations, but to let the pupil read the text at home and devote the time at school to more useful exercises in pronunciation, speaking and sight reading.

Now, most of our Modern Language teaching and all our examination tests are founded on the principle of translation, and unfortunately translation usually precedes any attempt at conversation. Many progressive teachers, I know, begin with conversational methods, but when I say that the majority of our High School teachers commence with the translation system I speak advisedly. They are forced to do so, to a certain extent, by the Regulations of the Department. We are given certain books—French and German grammars—to use as text-books, and the teacher runs a big risk who would be foolhardy enough to endeavor to use any other text-book than those authorized by the Department—though he must know, if he knows anything, that there are many helps infinitely better for junior classes.

But you may say, why use any text-book at all? How can you do so with conversation? If you have a book, do you not take all the life and interest out of the lesson? It is a question altogether of expediency. A book is necessary to save time. By means of a good book the pupil can see at once the symbol that stands for the sound and an immense amount of time is saved, which must otherwise be spent in putting such material on the boards.

An ideal method, with an ideal class, with ideal time at your disposal, would be to teach altogether without the text book, but unfortunately pupils do not attend every day, they lose the notes and vocabularies you give them, and they constantly forget the preceding lessons. So that a text-book, even for conversational methods, seems to be a necessity. But what book? is the question.

The greatest trouble is that there are no books for the use of French and German classes authorized by the Department that are of any especial service in this respect to Modern Language teachers. Such books certainly do exist, and the names could be given of a number of books which I should be delighted to introduce into my own classes, if I were permitted to do so. There are a number of very suggestive little books in French and in German (particularly Guerber's Märchen und Erzählungen, which is the best thing of its kind that I know of for beginners' classes, both for purposes of reading and of conversation). Moreover, these books are sold at a reasonable price, and not at all like our Canadian editions of French and German texts, padded with a lot of useless notes about persons and places borrowed from an encyclopædia, with elaborate vocabularies with numerous errors and misprints, bound in a weak-backed binding, with cloth of a dyspeptic yellow, emerald green or flamboyant red—and sold for the remarkably low price of $1.25.

But even under existing circumstances there are many ways by which the teacher may utilize the means at his disposal, of holding short conversations with his classes. In the first place, though not attempting to use the foreign language in explaining all grammatical difficulties, it is always possible to issue any orders or directions in the language studied, and it is very easily seen if the student has understood or not. Errors in sentences on the blackboard may also be corrected in the same way, if the error be a slight one. The meaning of a word may likewise be so explained, and, where possible, synonymous expressions may also be thus given. For this reason it is well for the teacher to have at hand a French Dictionary in French and a German Dictionary in German.

Again, even in taking up what has been an exercise from the French Grammar—especially if the work is on the board—the new words and phrases may be used as the basis for questions in French, and new subjects of conversation. It is by repetition that the correct pronunciation and use of a word is best imparted, so that the pupil should not only repeat but hear all the words of the new vocabulary as frequently as possible.

We do not use pictures in language-teaching to the advantage that we might. To a very limited extent they have been employed in some of my classes, and where the method has been used I have found it to be most profitable. But it must be a picture that can be seen at once by all the pupils in the class—not a picture in

their text-books. The pictures must be good subjects, well defined and large enough to be readily seen in detail by all members of the class. The teacher must himself study the picture beforehand, and have some idea of the questions that he will put as to the appearance of the sky, the time of year, the details of the landscapes, persons, animals, etc., which may form the varied parts of the picture. It may be a picture which contains a simple story that may be described in simple terms. Of course, I take it for granted that nearly every teacher takes advantage of the objects in the room to furnish subjects of conversation, but when you get beyond these I think good pictures will supply the topics for questions and remarks. Pupils are very apt at first to look upon this method as a return to the Kindergarten or Primary Class of the Sabbath School, but with a little tact on the part of the teacher the scholar will have sense to recognize the fact that the picture is only a means to an end and this feeling may be overcome.

The teacher who has artistic taste and ability, may also use them to great advantage in these classes by rapidly sketching the object described and furnishing the name at the same time. Or the sketch may be prepared and put on the board before the lesson begins, and the subject-matter in regard to it prepared also beforehand, that the interest may not lag. It is surprising to find how quickly the pupils will grasp the idea suggested with apparently no effort to translate into their mother-tongue, but by a sort of subconsciousness the meaning is conveyed to their minds.

I have often envied the Science Department of our own Institute its facilities, but particularly in the one respect of the electric lantern. Slides might easily be prepared not only of pictures but also of lists of words, etc., for conversational purposes, projected upon the wall in front of the class and changed in a moment at the will of the instructor. Much valuable time and energy might thus be saved for the teacher, who could devote what is thus economized for the better instruction of his class.

In regard to classes which are reading the prescribed texts, I do not think that the average teacher reads sufficiently to his class the foreign language, and with due regard to the intonation, expression and dramatic effect of what he reads. Take, for instance, "La Poudre aux Yeux." There are teachers, perhaps not here, who do not read it aloud, nor have it read aloud at all in their classes. You may not believe it, but it is so. If such a play is studied carefully and to full advantage, the teacher should read,

as impressively as his ability permits, a page or two or a short scene, requiring of the pupils their close attention and asking them to try and grasp something of the meaning as it is read, without any effort to translate. The extract might then be carefully rendered into English, not in a half-hearted, nerveless way, but, as far as possible, to correspond with the delicate fire and wit of the original. Then have some of the pupils read it to the best of their ability, not interrupting too frequently, for that destroys the interest of the scholar.

Finally, ask easy questions in French, requiring French answers, as to the number of the scene, the stage furniture, the number of persons appearing, their characters, their actions, and a hundred other questions that with practice will suggest themselves to you; but care should be taken that the answers are largely suggested in the text before the class. This I find to be the most profitable method in all respects, with even the beginners' classes. But, you say, we have not time to do all this and cover the work required by the demands of the Department. No one is more conscious of that than the author of this paper, yet of such advantage has this plan proved that it is employed as much as time will permit. My experience has been that by this method a teacher with an indifferent ability, and with a regrettable lack of practice in the foreign tongue, may learn to put easy suggestive questions that will not only teach others, but will be of practical utility to himself.

In taking up a passage translated into French or German prose, it will be found of excellent service to question the pupils in the language in regard to the story, the answers being suggested by the facts related in the story. Afterward, having erased the extract from the board, ask one of the pupils to give the story in his own words. Nor is it well to correct every little error that may be made. You would not correct on every occasion the language of the three or four year old child, yet he may repeat his error hundreds of times and eventually learn the right way. Let the class know that you are thus willing to let errors pass, or some sharp pupil may mistake the motive.

Another good plan adopted by many teachers is to read aloud to the class a story from some easy French or German primer. The stories in the little German text-book already referred to are excellent for this purpose, as they are simple, well graded and interesting. It is well to stop frequently and test the class as to their understanding of what is being read, and such questions

should best be made in German, even if you do not always require the answer in the same language.

Dictation and sight-reading I have not referred to, as they are no doubt used by every teacher. Inasmuch as all of our efforts in conversation must of necessity be spasmodic, and such a thing as a systematic method in this work is impossible at present, these two helps are especially valuable as they may be taken up in the scraps of time we sometimes have to spare at the end of lessons.

To my thinking, the end of Modern Language teaching in our schools should be to impart to the student the ability to read readily in the foreign tongue. To that end it would be better if we had at the beginning little or no translation, but rather began with such easy texts as would make translation unnecessary.

Further consideration of the question I shall leave to my colleague who is to follow. It is not my intention to suggest a different system of examination from that at present employed, but there is no doubt there must be better ways of testing a pupil's knowledge of a language than those we now use. But before anything else we must have a change in the French and German grammars for use in junior classes. Those now used were much in advance of their predecessors, and it is to be hoped that in any new editions such changes will be made as to guide the manner of teaching so that it will be more in conformity with the methods now in vogue in France and Germany.

MODERN LANGUAGES IN ENGLAND.

MISS A. D. PINNEY, HAVERGAL COLLEGE, TORONTO.

A year or two ago a sketch of the Modern Language work in England would have meant a wearisome description of conditions long ago bettered in the advanced educational world of Canada and the United States. Probably the acknowledged fact of the rapid strides made in America was not one of the smallest influences, which led to the reform movement now promising to revolutionize the old traditional systems at present used in our English schools.

The classical methods of teaching are still in common use and with most unsatisfactory results. The Englishman, it has been said, gets on in life in spite of the instruction which he gets in the class-room. An article, published last November on Modern Language Teaching, asks: "*Is* England, *can* England be satisfied with the results obtained by the teaching of living languages in her schools? If a few months abroad can give a tolerably good speaking knowledge of a foreign language, why spend five or six years at school before learning how to construct and pronounce the most elementary sentence?" An Englishman arrives in Paris and cannot even buy his foreign stamps at the post-office, and we have heard of the English girl on a rainy day hailing a fiacre and enquiring in hesitating and anxious tones: "Cocher, êtes vous fiançe?" "Mais non, Mademoiselle." "Prenez moi donc!"

For some years however there has been a reactionary movement amongst the leaders in Modern Language education. The country where this movement originated is, as usual, Germany. An epigrammatic definition of the German describes him as "a philosopher who watches on the Rhine, who makes war in the name of God, and makes other things which ought not to be made in Germany." This definition is manifestly made by the jealous Englishman, who, however, with his usual common sense, does not let pride stand in his way, and will use the foreign article in spite of its reproachful trade-mark!

The Luther of this reformation is Professor Vietor, who first sounded his Rhine watchword in a series of pamphlets signed: "Quousque Tandem"—"Der Sprachunterricht muss umkehren!"

One of his supporters was Franke, who published the pamphlet "Die Praktische Spracherlernung auf Grund der Pscychologie und der Physiologie der Sprache." Here we have the foundation of the so-called "Neuere Richtung" as opposed to the traditional classical methods.

Franke points out that the radical mistake of the classical methods is that they begin with the written and not the spoken language; a language is studied analytically as if it were a concrete object—an ἔργον—rather than synthetically as an abstract activity —an ἐνεργεια—which is to be used from the very first as a vehicle of thought.

Before speaking of the special turn that the Neuere Richtung has taken in England, may I be allowed to touch on some of its various points, following the lines of M. Bréal in his Conférences at the Sorbonne.

The teaching of a living language may be divided more or less artifically into three periods:

1. The period given to Pronunciation.
2. The period given to Vocabulary and Grammar.
3. The period given principally to Literature.

To speak only of the first two periods, that of *Pronunciation* must never be hurried over; the teacher must not be urged forward by the fear of going too slowly nor by the hope of returning to it later on. There must be a systematic training of the ear and speech organs—the instrument must be tuned before it can be played. The articulation of every language requires its own peculiar mouth-positions, which must be practised before a correct production of the sounds can be obtained. In these exercises the phonetic alphabet so warmly advocated by M. Paul Passy is of most valuable assistance.

A *Vocabulary*, in the second place, is not to be acquired by the learning of long lists of words and their English equivalents, nor by means of word-rhymes, which burden rather than aid the memory. A word must be taken into the memory in the same context in which it is to be reproduced, otherwise it is of about the same practical use as a watch buried in the recesses of an inaccessible pocket. Gouin's experiences are a warning against such an expenditure of useless labor. When sent to Germany to learn the language, he at once set to work to learn words, and finally succeeded in learning a dictionary by heart; this he found useless for conversation and he speedily forgot it. Nothing daunted he

turned to his dictionary once more, and this time seriously injured his eyesight, which obliged him to give up work for some time, with the result that he almost completely forgot all he had gained by dint of so much labor. He returned to France, and one day while watching a small child learning to speak and trying to perform the action represented by each verb, it occurred to him that surely the *natural* method was the royal road to learning a language. He returned to Germany, lived with a German family, entered into all the games and interests of the children, and soon mastered all the elements of the language.

The better way, therefore, of learning words is to learn sentences which have some motive, which express a wish or ask a question, and both encourage and impel the child to speak.

Again, it is *inductively* from typical sentences, which have been carefully and thoroughly mastered, that *Grammar* must be taught. Grammar therefore must not be slavishly and mechanically learnt, but its rules must be deducted from carefully prepared examples. The child must have his powers of observation and reasoning developed and formulate his own grammar step by step.

The new methods would exclude *Translation* entirely from elementary work as being a literary exercise of style, which must not be begun until the pupil has gained a better command of the language. The beginner must read easy texts and use a dictionary which explains words in simple terms of the same language.

These are some of the principles on which the latest English books for beginners have been founded. The first to appear was Siepmann's German Primer, comprising a First Reader, Grammar and Exercises. It introduces a few innovations only, and is a half-way house, calculated to entice the teacher away from strictly classical methods. The author intends the book for beginners of fourteen, and has made the Reader the nucleus of all its teaching, for the majority of passages have been written expressly to illustrate the grammatical rules to be learnt. Siepmann's Primer is not so far on the road to reform as Miss Harcourt's "German for Beginners," which is the result of twenty years' experience in teaching German to English girls, who had gone to Germany to learn the language. Miss Harcourt has arranged a series of simple reading lessons, which are suitable for children, and which gradually develops the elements of German Grammar.

A still nearer approach, however, to the new methods has been made in "Dent's First French Book," which is adapted by Professor

Rippmann from the works of Professor Alge, a Swiss pioneer in the reform of Modern Language teaching. It is based on Hölzel's pictures, beginning with those of the four seasons, and there is a companion volume entitled "Hints on Teaching French," with a running commentary on Dent's First French Book." The child is led to connect the object or action represented on the picture immediately with the French word, without passing through the medium of either the spoken or written English word. Every new word is printed in large type at its first appearance. The exercises consist of answering questions given in French; there is no translation from English into French, and the use of English is reduced to a minimum. The vocabulary is an alphabetical one, which does not give the isolated word and its English equivalent, but a *sentence*, in which the words occur in large type and the number of the exercise in which the word was first used. This recalls associations enough to remind the child of its meaning. The home-work is always a revision of what has been done in class, and the pupil is gradually led to do "skeleton" exercises and then free compositions. He then passes to "Dent's Second Book" and begins the reading of a connected story. The teacher reads one sentence after another, letting the pupils repeat them in French both individually and in chorus. Every unfamiliar word he explains in French, or, if absolutely necessary, in English. A revision of all the material learnt is ensured by passages for dictation, which introduce the same words and phrases in various connections. The Grammar is a critical comparison of the peculiarities of inflexions and a reduction of these to rules derived from the text only, arranged in a section at the end of the book.

The same system has been worked out on exactly the same lines by Messrs. Alge and Rippmann in their German book called "Leitfaden für den ersten Unterricht im Deutschen," which has appeared this year in a second edition. As the pictures for both books are identical, children cannot begin French and German at the same time—a year at any rate must intervene. At present French is always begun in quite the lowest forms, and German about the Middle School. However, there is a tendency to begin German earlier than this; I heard last autumn from the Modern Language mistress at the Manchester High School for girls, that German had been begun orally in the Lower School.

As to the teaching of pronunciation in Dent's books, an entirely new feature is the introduction of the phonetic transcript of the first

thirty-six lessons in an appendix, which may be used by the teacher or not, as he likes. The authors recommend every teacher to have a working knowledge of phonetics, and to insist on each word being repeated again and again until his ear is satisfied with its pronunciation. There is still great opposition to the use of the phonetic alphabet, and last year a committee was appointed by the Modern Language Association of England to consider the question, and after enquiries of all those who had used the alphabet, to report on the general results. I think there is no doubt that the phonetic alphabet will eventually be adopted by all Modern Language teachers, for it is a marvellous economy of time and trouble.

And now, having given some of the various reform theories, I should like to quote some of the experiences of an English master who has put them into practical use.

After three weeks teaching with Dent's books he says: "The two upper classes in German can construct simple sentences and possess at least one hundred words. They have German names and are much interested in talking to one another, in questioning one another in turn, and keeping the ball rolling with considerable vivacity and good nature. The labour for the teacher in class is considerable. He must constantly be talking and throw all his energy into his work—an effort, however, which is more than repaid by the bright, amused look of the pupils instead of the wearied, worn look of the dear children undergoing instruction on the old classical methods. For German, during the first month, I use entirely the phonetic transcript, then both this and the ordinary orthography, and finally drop the phonetic writing. A child must not call a letter by its English or even French name; thus p does not equal pé, but simply the voiceless lip-stop. The difficulty of introducing conversation to children of about the third French year (14 or 15 years old) is a very great one. I am dramatising for my class some of the passages in Dent's Second French Book and Grimm's 'Schneewittchen.'"

The experiences and results here alluded to have excited a good deal of notice, and Mr. Barnett, H. M. Inspector of Training Colleges, after attending some of these classes, has become an enthusiastic convert. His influence is likely to go far.

A book which will be most helpful in the study and use of phonetics appeared last month in England. It is an adaptation of Prof Victor's "Kleine Phonetik," by Professor Rippmann, entitled "Elements of Phonetics, English, French, and German." The book

is divided into three parts; the first is a detailed and diagrammatic description of the *Organs of Speech*, the second a careful discussion of the *Separate Sounds of Speech* in English, French, and German, and the third an examination of the *Sounds in Connected Speech*, with comparisons of the different stress and intonation in the three languages.

The adoption of these new methods will be hastened on also by the influence of the Modern Language Association, which was founded in 1892 to raise the standard of efficiency in Modern Languages, to promote their study in schools, and to obtain for them their proper status in the educational curricula of the country. It provides means of communication for students and teachers by publishing a journal, and by holding meetings for the discussion of language, literature and method. Altogether in these last few years a great deal of enthusiasm has been displayed in the attempt to introduce into England the same satisfactory results as those obtained abroad.

And now, passing on to the Modern Language work done at the University, I will give a sketch of the history of the Medieval and Modern Languages Tripos at Cambridge. It was established in May, 1884. The regulation then given remained in force till 1893, and then underwent a slight modification.

Under the first regulations the tripos was divided into four sections:

A. Modern French and Modern German. Unseen translation and composition.

B. French, with Provençal and Italian.

C. German, with Old Saxon and Gothic.

D. English, with Anglo-Saxon and Icelandic.

Each candidate had to take Section A., *i.e.*, Modern French and German, and one of the three others, and was not allowed to pass unless he had satisfied the examiners in A and his special subject.

This scheme did not give general satisfaction. It was regretted that the philological and medieval element should be more prominent than the literary and modern element. A new scheme was drawn up and enforced in 1894, by which the division was subdivided into six sections—two to each of the three languages:

A and B. English Group.

C and D. French Group.

E and F. German Group.

The first of each of these pairs of sections represents the more modern side of the language, but it includes a certain amount of philology and medieval literature besides. It is very usual to take the modern sections of French and German together, or again, English and German. In order to form an idea of the ground covered by one of these groups, I will give the details of the French papers, *i.e.*, of the papers in Sections C and D.

There are twelve papers in all:

1. Passages from English authors for translation into French, and subjects for a French essay.

2. Passages from French authors not earlier than 1500 for translation and explanation.

3. Passages from selected French authors of the same period, with similar questions on language, etc., *e.g.*, in 1895 the selected authors were: Boileau's Works, Taine's "La Fontaine et ses Fables"; Sainte Beuve, "Causeries de Lundi" on Regnard, Montesquien, Mérimée and La Fontaine.

4. Passages from selected French authors earlier than 1500, *e.g.*, Two "Miracles de Nostre Dame," "Le Couronnement de Louis," and D'Aubigné, "Lettres à ses Enfants."

5. Passages from selected French authors, not earlier than 1500, for translation or explanation, with special reference to literary history, *e.g.*, Motière's Plays.

6. (*a*) Questions on Modern French Grammar and Metre; (*b*) Questions on Historical French Grammar (including Phonology, Morphology and Syntax).

There is also a *viva voce* examination in reading aloud and dictation, but the results do not affect the class lists, and are indicated simply by placing an asterisk after the name of the successful candidate.

Section D has a set of six papers corresponding to those of C on Italian and Provençal or Spanish and Portuguese, including a paper on historical Romance Grammar. Before taking the tripos, a previous examination must be passed, known as the "Little Go," which consists of fairly elementary papers in English, Classics and Mathematics. This can be and generally is taken before entering into residence. Not only must the "Little Go" be passed, but it is necessary to keep at least five terms' residence at Cambridge; two sections may then be taken, and then after not more than twelve terms' residence it is allowable to enter for one or two of the other sections, or, indeed, another tripos; but it is not allowable to make another attempt in case of failure.

Students are always strongly urged to spend their vacations abroad, for without this it is impossible, with the prevalent Modern Language education in schools, to gain a correct foreign accent, rhythm and stress. Defects may be remedied by the study of hand-books of phonetics, but we hope the time may come when certain defects will not exist, owing to the systematic training of the ear and organs of speech in early childhood. Without this the study of Modern Languages can never hope to become a factor in the attainment of that end toward which all are pressing, and which no treaties or disarmament proposals seem able to compass—a good understanding among all the nations. It was the confusion of tongues that first sowed enmity amongst the builders of the Tower of Babel; let it be our endeavor to blend these tongues into harmony once more, that we may build a new Babel—not a tower of ugliness and presumption, but one of beauty and concord.

HALL CAINE.

MISS KATE C. SKINNER, B.A., GUELPH.

As time goes on, portrayers of the beautiful in outward life have to regret the gradual loss of much that is quaint and picturesque in manners, customs, dress, and scenery itself. Picturesqueness becomes levelled down to the great conventional. This levelling-down process is being slowly accomplished at present in the Isle of Man. A few years ago the name "Isle of Man" suggested to most of us merely an ancient and obsolete language, of interest chiefly to philologers, to whom it offered a quiet and retired pasture for undisturbed dialectal browsings. We now know the little island better, with its romantic scenery, its quaint dialect, its ancient institutions, and its types of character. It has remained for Hall Caine, himself a Manxman, to hold up the mirror to life in the land of his fathers.

Great possibilities lay before the novelist who was first to enter the scenes opened up by Hall Caine, nor is one disappointed in his expectations of local coloring and strange and stirring adventure. But it is impossible to read even one of this author's books without discovering that the writer is a man with a serious purpose: his novels are not mere series of incidents strung together by the unifying thread of one or two central characters. On the contrary, the descriptions, incidents and characters themselves revolve around a central idea which is the *motif* of the story. This is so much the case that, sometimes, as in "A Son of Hagar," "The Shadow of a Crime," and "The Christian," many of the incidents, and even some of the characters, convey the impression of having been manufactured to illustrate the idea. There is lacking that sense of inevitableness which characterizes the work of the greatest revealers of human life. On the other hand, this same faculty used more skilfully gives a striking force and unity to the treatment, as is the case in "The Deemster," "The Bondman," and "The Manxman.

Hall Caine is to be judged as a teacher: he writes with a serious didactic purpose. In doing so he necessarily provokes debate and antagonizes a portion of his readers, but it is a tribute to his power

and skill as a writer that the interest of his novels is sufficient to divert the mind from its antagonism. It has been objected that he has marred his art by making it the medium of ideas which may not legitimately be conveyed through such a channel. Without venturing into the deep and dangerous waters of such a discussion, it is sufficient to observe, that owing to the nature of his books Hall Caine is to be judged as a teacher, and a conscious teacher, of spiritual ideas. The very titles of his books are an index to their moral conception—"The Scapegoat," "The Bondman," "A Son of Hagar," "The Christian." Hall Caine attributes his own success as a writer of fiction to the fact that he has always been a great reader of the Bible. We know how some writers have apparently regarded the ancient Jews as a nation created by a beneficent Providence and caused to manœuvre heavily across the stage of human existence, merely in order that the spectacle of their misfortunes might furnish a striking and convincing object-lesson for the equally rebellious though more favored transgressors of the latter half of the nineteenth century. One fancies that if the stately shades of the much abused patriarchs ever revisit these glimpses of the noon and observe the role they are forced to play in modern literature, they must exclaim in ghostly protest: "How long, O Lord, how long must we be treated as illustrations! We *were* men and women!" Hall Caine, however, has been very successful in interpreting in modern form the dramas of the Bible. The greatest lesson which he finds in ancient as well as in contemporary life is old and simple: "Whatsoever a man soweth, that shall he also reap."

It has been said that Hall Caine's books have aroused the English-speaking people to a keener sense of responsibility for existing social wrongs than any works since the time of Dickens. And yet Hall Caine does not treat contemporary social evils in the way in which Dickens attacked the corruptions of his day. In fact his books scarcely reflect his times. There is in them a curious sense of aloofness from the agitations of contemporary life. It is true, he burns with indignation at oppression and injustice. When, however, in "The Shadow of a Crime" he protests against the irony of law which is not justice, he passes over his own times altogether, and going back to the equivocal days of Charles the Second, makes his plot hinge upon an obscure piece of old jurisprudence. When he becomes indignant at the oppressions suffered by the poor and helpless at the hands of the rich and powerful he

depicts this injustice—not in England but Morocco, and having thus laid the scene in a land sufficiently remote to throw a glamour of romance over the whole, he proceeds to unfold a story so strange and absorbing as to make its accompanying tale of human suffering "Like a tale of little meaning, tho' the words are strong." Again, he sees the corruption in modern society and writes "The Christian." This time he does lay the scene at home, and sets out with the most earnest purpose of exposing the hollowness of State and Church and charity itself. But soon he is adrift on a love story—or perhaps the other was, after all, the cross-current. Now farewell church, hospital, social settlement and all! Now no one cares much about these. Indeed the bishop, the clergy, the public official, the man of society, and the lady of fashion play their parts altogether too precisely to be at any time very convincing, The truth is, that while using the devices of a realist, Hall Caine is, in spite of all, a romanticist. He paints his scenes, not under the searching light of common day, but bathed in the atmosphere of romance. What we find in his novels is not facts and figures but the soul of a great idea, living and glowing, itself a fact.

The influence, therefore, exerted by Hall Caine over the social conscience of his readers is not due to his emphatic espousal of any specific reform. He passes lightly over, or leaves altogether unsuggested, the open questions of his day. Where some writers give prominence to political situations to make or mar their chief interest, Hall Caine introduces just enough of these to furnish the necessary machinery for his plots. Where some novelists reflect the rapidly evolving religious ideas of the times, Hall Caine raises no question. For him God is most indisputably in His heaven though all may not be right with the world. In his novels religion is typified by such characters as Parson Christian and Bishop Mylrea, men of simple dignity and unquestioning faith, delightful types of the same literary stock as Goldsmith's immortal village preacher and Chaucer's "Povre Persoun of a Town." It is characteristic that the one evil against which this novelist cries out with constant and bitter emphasis is not born of contemporary social conditions, although aggravated by them. "The Manxman" is Hall Caine's protest against it, and is his modern version of the ancient story of David and Uriah. The truth is that this writer goes deeper than all outward expression, and striking at the roots of conduct, deals with the few elemental passions which underlie it.

It is to his earnestness and sincerity in depicting these passions that we must attribute his power as a novelist.

Love, pity, hate, jealousy, revenge, these are the chords of the human heart struck by fingers which are becoming year by year more skilful and sympathetic. The influences of caste and condition play little part in the unfolding of Hall Caine's plots and characters. This may partly result from the peculiar nature of his situations, but it is due chiefly to the fascination which he finds in the study of the soul itself. There is where his interest lies, and in pursuing it, he pushes aside the interfering superstratum of convention. His men and women speak soul to soul as they stand face to face. Much of their conversation is in the language of pure passion. The integrity of honest manhood becomes clothed with a new dignity. There is a somewhat extreme but striking illustration of this in "The Manxman," where Pete William, noble and generous soul, wronged by friend and wife, and, as it seems, God himself, still stands upright in his sense of rectitude.

The faults of Hall Caine as a novelist are naturally such as are incident to the qualities already observed. The chief of these is a kind of insistence on the theme, an iteration and reiteration which leaves the moral no room to enforce itself. The most conspicuous example of this is "The Manxman." "The Manxman" and Hawthorne's "Scarlet Letter" offer a comparison too obvious to be resisted. As a study of the purification of the soul through remorse and suffering, "The Scarlet Letter" instils its lesson more quietly but more irresistibly than the later romance. The art which depicts the tragedy in the soul of the Puritan priest is more impressive in its subtle delicacy and its rejection of external aid than the storm and stress with which the same tragedy is revealed in the soul of Philip Christian.

The spiritual ideas to which Hall Caine subordinates everything else in his books are on a heroic scale. His conceptions are vast and far-reaching. His characters and incidents not infrequently rise to epic proportions. It will be seen, therefore, that in the development of his art he must constantly meet certain technical difficulties. In his first books the characters and situations are inadequate to the idea, and the result is an extended bathos. The preface to "A Son of Hagar" announces the object of the book—"To find a character, noble but tainted with hidden evil, to watch his yielding to temptation," finally to show how "a man of strong passions, great will and power of mind may resist the force that

precipitates him and save his soul alive." This certainly arouses some expectations—but Hugh Ritson is no Faust. He is vulgarly melo-dramatic, and appears from the first such a consistently third-class villain and first-class cad that presently we are surprised to read, "His soul was waking now. He began to suspect that he had been acting like a scoundrel." When a man, after bringing misery and desolation on one home, after embittering his father's last hours, and deliberately planning the ruin of his only brother's happiness, discovers only accidentally that he may possibly be "acting like a scoundrel," we should say that his conduct, instead of being measured by the ordinary standard of morality, might more fitly become a subject of interest to the specialist in forms of mental alienation. "The Christian," too, suffers from the incongruity between the controlling idea and the concrete expression. Perhaps the failure here is so conspicuous because the aim is so lofty. Hall Caine describes "The Christian" as a picture of "the types of mind and character, of creed and culture, of social effort and religious purpose," which the author "thinks he sees in the life of England and America at the close of the nineteenth century." Surely the least sanguine observer of his times views them with distorted vision when he represents their "social effort" by the spasmodic philanthropy of a set of fashionable faddists, and their "religious purpose" by the irresponsible vacillations of a young man whose already unevenly-balanced mind has become unhinged through excess of emotion. But the real significance of the book lies in the solution offered to the difficulties confessed. It is fair to suppose that Hall Caine represents in John Storm his idea of the force that is to regenerate society. Most people will accept the type in so far as it stands for love of truth, sympathy and protection for the helpless, frank fearlessness in attacking unrighteousness in high and low places. But there is a startling chasm between the erratic and self-seeking motives of this exponent of Christianity and the normal sanity and absolute devotion of that perfect life that "breathed beneath the Syrian blue." John Storm has no gospel for an age of doubt. He is, in fact, the most dispiriting and insincere kind of a pessimist. He has no falth in the society which he tries to raise.

"The Bondman," "The Scapegoat," and "The Deemster" are better examples of Hall Caine's art. In these the concrete expression responds more adequately to the motive. It is true that everywhere this writer makes somewhat violent demands upon the

credulity of his readers, but his own force and passion are so great as to leap over all improbabilities with an ease which ensures confidence. One follows and forgets to criticize. "The Bondman" is an epic of friendship. It tells of the flowers of devotion, forgiveness and sacrifice, growing out of the hard ground of inherited hate. It preaches the gospel that "a friend loveth at all times, and a brother is born for adversity." The scene in the chasm of all men, where Jason's great love lends him great strength for the sake of the man who is his brother and yet his enemy, stands out in the dignity and simple force of an epic poem. "The Deemster" repeats the theme of the prodigal son. It is the most thoroughly Manx of all Hall Caine's novels, reflecting the little island, its scenes, customs, traditions, superstitions. Dan Mylrea is the man and the Manxman as Hall Caine loves him,—proud and shy, gay and gloomy, full of generous impulses and impetuous faults, a contradiction in character, the result of a mixture of Norse and Celtic blood. The impressive spectacle of his sin and retribution is never obscured or belittled by unworthy accompaniments. In this novel, as in the tragic drama, the heart is awed and purified by pity and terror.

In turning from the matter of Hall Caine's books to the manner, one might say with his own Manxmen, "Aw, the beautiful tongue at him, beautiful extraordinary!" His English style has been from the first admirably forceful and original. He writes with a directness which often becomes epigrammatic. His fondness for climax with its accompanying snare has been already noted. In fact his novel is a series of crises with no meditative interludes. His atmosphere is charged and tingling with the electric intensity of his thought. His humor itself flashes up and disappears like the lightning about the horizon, and is itself a part of the storm. All the events lead swiftly towards the final bursting of the tempest. When, therefore, a scene is occasionally introduced for its grandness and independent interest, the result is intrusive rather than diverting; this author's events do not move in that leisurely way conducive to the enjoyment of scenes for their own sake. There is everywhere observable a distinct inclination towards the heroic and vast.

The play of complex and conflicting emotion has a great attraction for Hall Caine—the meeting of the Sôk, the scene on the mount of Laws, the condemnation of Dan Mylrea, and the frightful struggle of Ewan and Dan at the sea-cliff's edge, all have an intense

psychological interest. It may be noted, however, that Hall Caine's faults are of such a nature as to be much exaggerated on the stage, whereas his excellences become obscured in dramatic presentation.

Hall Caine is a writer who is steadily advancing in technique. Advancement, with his qualities, means power of restraint. He has always had the "prophet's fire" and is patiently acquiring the "master's hand."

Our view of our contemporary writers lacks perspective. We overestimate, no doubt, some who are now having their day, but will soon cease to be. If Hall Caine's works are some future day to pass into the limbo of literary obscurity, they will go at least not without having served their day and generation. If they have done nothing more, they have rescued from forgetfulness ancient customs and traditions worthy of being remembered. But they have done more: they have taught anew the innate dignity of manhood and womanhood apart from rank and caste; they have taught also with passionate emphasis the reality and sacredness of the human affections; and they have exalted that simple rectitude of character in the consciousness of which a man may stand unashamed before God and his fellows.

ISRAEL ZANGWILL.

DR. J. W. TUPPER, WESTERN UNIVERSITY, LONDON.

"The child of foreign Jewish parents in humble circumstances, Mr. Israel Zangwill was born in London in 1864, passed his early childhood in Bristol and Plymouth, and returned to spend his youth among those east-end scenes which he has portrayed in 'The Children of the Ghetto.' Admitted into the Jews' Free School, Spitalfields—the largest elementary school in the British Empire—he won three scholarships, became a pupil-teacher, and in due course, a full-fledged teacher."*

He entered London University, and graduated with triple honors in 1885. During his early literary career he was the editor of a comic paper, *Ariel*, a short-lived but brilliant journal.

Mr. Zangwill's works, besides comediettas and short poems, are a volume of essays, collected for the most part from *The Pall-Mall Magazine*, under the title "Without Prejudice"; the Ghetto stories, embracing "Ghetto Tragedies," "The Children of the Ghetto," "The King of the Schnorrers" (which includes other short stories as well), and "Dreamers of the Ghetto;" a novel dealing with the question of art and marriage, "The Master"; a "fantastic romance," "The Premier and the Painter," the authorship of which he shares with Louis Cowen, and which came out originally under a *nom de plume;* the humorous satires, "The Bachelors' Club" and "The Old Maids' Club"; the detective story parodied, "The Big-Bow Mystery"; and the serio-comic novelette, "Merely Mary Ann."

Mr. Zangwill's intellectual character is fairly well indicated in his short essays on literary and other subjects. In the essay introductory to "Without Prejudice," he makes the following declaration about himself: "There is a great deal of 'the pride that apes humility' in the careful and conscientious suppression of the egoistic in books and speeches. I have nothing of this modesty to be proud of. I know that I am cleverer than the man in the street, though I take no credit to myself for it, as it is a mere accident of birth, and on the whole a regrettable one."

* Quoted by the London *Academy* of April 16th, 1898, from the N. Y. *Bookman*.

And this declaration is borne out by his essays and his stories; he is cleverer than the man in the street. His essays reveal a man of unusual cleverness and with a keen sense of humor, but not one of especially profound thought. In his more serious works, too, his criticisms of life and art hardly go much deeper into the heart of things than do his essays. There is nothing in these essays which is a permanent contribution to the criticism of art or life. There are plenty of very clever remarks, neatly turned epigrams—some approaching brilliancy—skilful presentations in a striking form of ideas which are trite enough: they afford entertainment for an idle hour, and that is all. His cleverness, too, is helped along by artifice, which his essay, "The Philosophy of Topsy-Turvydom," reveals. It is so to change the expression of a well-known truth or saying that from its incongruous form a humorous result may be obtained. His essays are much the same as the epigrammatic conversations scattered through his stories in which his characters discourse on the subtleties of life and art. It is the spirit that pervades "The Premier and the Painter." Mrs. Dawe herself, in the keenness of her intellect, is the vulgar counterpart of the refined autocrat of the aristocratic coteries. Thus it is that Mr. Zangwill's clever characters are all very much alike—largely reproductions of their author. The critics and artists of "The Master"—more particularly Herbert Strang, Sidney Graham of "The Children of the Ghetto," and several of the characters of his short stories are of the same kin. It is the lack of deep thought, as shown in the essays, that makes possible the slightness of the problems involved in most of his stories and the utterly unsatisfactory solution of the really serious problem of "The Master." Though his cleverness may do much in the portrayal of individual scenes and characters, it does not suffice for the complete development of a work of art. A mild cynicism pervades these essays and enters to a certain extent into his stories; sometimes it is merely diverting, but again it spoils good effects, as in the character of Eleanor in "The Master."

Mr. Zangwill's work as a novelist has to be judged almost entirely by "The Master." This is his one serious novel; it is an earnest endeavor to depict the life struggles of an artist through the immense difficulties of environment and the consequences of one capital moral mistake to success.

The early part of the life of Matthew Strang—the artist who becomes the master—is, up to his marriage, a conflict between

his ambitions and his pitiless environment; the later part covers two distinct periods, one of spiritual inertia, from which he is aroused by two separate agencies—the other of his highest artistic development. The course of Matt's early struggles in Nova Scotia and in London is portrayed much more satisfactorily than the progress of his later failure and success. The subject is more adapted to Mr. Zangwill's abilities—it is more of a material than a psychological character. There is the excellent background of nature in Nova Scotia and, for his artistic purposes, the equally admirable background of the grimy streets of London; there is the bitterness suffered from bigoted opposition, scornful materialism, and grinding poverty; there is the heartache of hope deferred and of blank failure. The gradual sinking from buoyant expectation through poverty, defeat, and the jail to the utter despair which makes irresistible the temptation of his fatal marriage is drawn by the novelist with admirable art.

When, however, the hero is placed beyond the reach of poverty by his marriage and the consequences of his step begin to tell on his work, the conflict passes into his soul, and the novelist shows less skill in conducting it. The utter vulgarity of Rosina, the artist's wife, which unfits her in any way to be the partner of a sensitive artist, is well portrayed; but the influence of her character on her husband till he forsakes her, lets his ideals disappear, and sinks into a state of moral and artistic inertia, is insufficiently brought out. The deep, moral consequences of his marriage, and the subsequent desertion of his wife, together with the long struggle of his past life against adverse conditions, are the causes of his failure; though the former are left largely to inference. Mr. Zangwill has not shown himself able to create situations in which the workings of the soul may be analyzed and the vast significance of this moral problem revealed; the shallow life of the clubs and the adulation of society, which reflect this discontent, are too frivolous to give it any great meaning; they are intended principally to bolster up the case of Matt when he returns to his wife—to give his home a negative attractiveness, in that it is free from both. It is a very weak support, and the home remains as desperately vulgar as ever. The same failure to depict a psychological process is seen in the equally important period after the hero's recovery. The events leading up to his final action are admirably detailed, but as to his successful career from that time on we have only the *ipse dixit* of the author. As his success is

the end to which all his endeavors pointed, it is surely a sad lack in proportion to restrict to a few pages of mere statement what should be the actual working out of the results of all his previous experiences.

The way by which Matt is restored to his higher and better self admits of question. Two agencies are brought to bear upon him—an artistic agency in Eleanor Wyndwood, a moral one in Ruth Hailey. The love affair of Matt and Eleanor, with its restored ambition to express his highest self in art, is well developed, and the scene in the Paris studio is an admirable climax. The insecurity of their new joy, too, is finely conceived in the fearfulness of Eleanor towards the opinion of the world. The moral question has yet to be faced, and it is significant of the end, that it is the womanly intuition of Eleanor that sees it first and then only in its superficial aspects; these Matt disregards It is when he meets Ruth Hailey that the full meaning of his past life and his new venture arouses his moral sense. Though Ruth may impress us as somewhat of a prig—she is even impressed favorably by Rosina—and her love for Matt may seem to us sentimental, it is rather as the link between the past and the present, between moral duty done and noble ambitions cherished, on the one hand, and duty neglected and ambitions asleep, on the other, that she frees Matt from the allurement of this dazzling temptation. It is here that all the stress of his early life tells—his Puritanic up-bringing, his struggles against temptations without and within, his battling with the hardness of the world,—and the victory he wins is glorious.

But Mr. Zangwill has carried his hero's victory farther. Matt returns to his wife, lives with her in the most sacred of all relations, and she bears him two more children, while all the time he does not and cannot love her. And now the painter rises to an artistic eminence before unattained; his new manner, the expression of his chastened personality, is developed and perfected. To give this an air of probability the woman's vulgarity is toned down and the artist finds a certain repose in his home. But this fails to fit in with what went before; no sympathy can exist between Matt and his family; their sordidness is at utter variance with his refinement. Their very relationship has become immoral. Love alone makes marriage pure and holy, and the soul is degraded that is wedded to a woman whom it neither respects nor loves. And his art must sink with his soul, especially when, as in Matt's case,

there is such a vital connection between the moral and the artistic natures. He is playing the hypocrite, if not in his wife's eyes, certainly in his own. It is one thing to fulfil his duty to his wife, but quite another to pretend to love her—even to give her the appearance of love which would satisfy her—and be false to his own moral sense.

"The Premier and the Painter" is an extremely clever production, and as such is a good instance how far artifice may go without becoming art. The cleverness of the book is at once its justification and its condemnation: its justification in that the wit, the ridiculous situations, and the sparkling dialogue afford amusement from first to last; its condemnation, because it drags the story out to an interminable length, so fertile are these authors in creating clever situations, and because it leads to complications in which real passions are incongruously mixed up with burlesque. This same incongruous mixture is shown in "The Big-Bow Mystery," where an innocent and promising young man is murdered for the sake of displaying the cleverness of a retired detective over the ponderous stupidity of his successor, a cleverness which is, however, caught in its own toils. Murder as a practical joke is as mortal a sin in fiction as in fact, and no novelist should be acquitted who sheds innocent blood for the sake of a burlesque, even though the burlesque be clever. So in "The Premier and the Painter" an innocent woman should not be made to suffer pain by being caught in the machinery of an extravaganza. The character-drawing of this book is good, especially that of the lower classes. Mrs. Dawe and her servants and customers, the wandering politicians and impostors, the street arabs and policemen, the undertakers and bartenders, and all the riff-raff of the streets, Mr. Zangwill fashions true to life. In this book we also have fine illustrations of his powers in parody, for instance, the coroner's inquest, containing Mrs. Dawe's delightful cross-examination, newspaper reports and letters, and a criticism by Mr. Ruskin; and in other works a paper by the president of the Royal Academy, a post-card of Mr. Gladstone's answering an invitation to speak, and numerous editorials and reviews.

In his short stories Mr. Zangwill shows an undue fondness for the *bizarre*. He seeks out fantastic characters and places them in situations more odd than artistic. Such are "An Odd Life," where a man skips every alternate year of his life, and, when he returns to live the omitted years, dies in infancy; "Cheating the Gallows,"

the case of a man impersonating two men, who have no existence outside of himself, and being hanged for murdering one of them; "The Memory Clearing House," a scheme by which memories might be bought and sold; "The Vagaries of a Viscount," a piece of farcical detective work. The Ghetto stories in "The King of the Schnorrers," comprising "A Rose of the Ghetto," "Flutter Duck," and the title piece, are amusing revelations of Ghetto life, and in that have their chief interest. The Schnorrer is a comparatively new type, and he differs from the ordinary beggar in just those qualities which mark the Jew off from the Christian. Mr. Zangwill, too, with his knowledge of Ghetto life, has given these qualities a living embodiment in his Schnorrer.

By all odds the best stories in this collection are, "A Successful Operation" and "A Tragi-Comedy of Creeds." The former is very short, but in its small compass is contained the whole mystery of evil, the inexplicable relation of reward and punishment; in the latter are brought together the creeds of the Jew and the extreme Evangelical school, and the presence of death reveals the basic oneness of their faiths.

It is especially as the revealer and interpreter of Ghetto life that Mr. Zangwill has made his contribution to our modern literature. Though he has given us the Jew in Belgravia, in various stages of naturalization, he has done his best work with the Jew born and bred in the Ghetto. This Jew is the strange anomaly of our modern world. He is the real Jew, the inheritor of the promises, the chosen of God, the persecuted of mankind, the one unchanged and unchanging people among the shocks and revolutions of humanity—a nation which yet belongs to all nationalities, "a palimpsest with the record of nation on nation." Here he is in all his sublimity, his humor and religious fervor, his domestic fidelity, his kindly charity, his petty jealousies, his stubborn worship of the letter, his consciousness of the greatness of the race, his eternal looking forward to the Messiah. Then, too, there is the heterodox type, those who have abandoned Judaism and become Christians in all but religion. And this Jew, with all the peculiarities that distinguish him from his Christian fellow, is part and parcel of our humanity. He is not merely the Shylock of "The Merchant of Venice" or the huge-nosed stock-broker of the comic papers, but he is a man of like "senses, affections, passions" with ourselves. These children of the Ghetto live their peculiar life, but there is not an emotion that touches their hearts that does not awaken a

responsive chord in our own. All sorts and conditions of men we meet among them. There are the Shadchans or marriage brokers; the neo-Hebrew poets—admirably represented by Melchisedek Pinchas, a man of colossal egotism; the mad Messiahs, and the visionary reformers; the "old clo' men" and the street peddlers, who by mysterious ways rise to fabulous wealth; the benevolent Takeefim and the "humorous Schnorrers who accepted their gold"; "the fair fat women with tender hearts, and the bald, ruddy old men," all drawn true to life.

It is in the excellence of its characterization rather than in the artistic unity of the work as a whole that the merit of "The Children of the Ghetto" consists. So in "The Dreamers of the Ghetto," it is the general impression of Judaism that gives the book its value; it is "the story of a Dream that has not come true." It is in this book that the strange complexity of the Jewish character is brought out—the double personality—on one side the religious instinct, the result of the centuries and centuries of subjection to the law of Moses; on the other side the human soul, the *Ego*. It is when these two sides come into opposition that such ruin is wrought to the individual.

"The Dreamers of the Ghetto" shows the futility hitherto of the Jews' efforts at self-expression in a Christian land, both before and after the breaking down of the seclusion of the Ghetto; and the reason is their utter lack of concentration, they being scattered over the face of the earth. The Jew has no stake in any country, because his self-sacrifice has been not for the country but for his creed, which the country does not profess. And when the sincerest devotion to this creed carries with it as an evitable concomitant, the most rigid formalism, against the pricks of which it is useless for the Jew to kick, the possibility of a noble self-expression is made as slight as possible. This formalism has been and is the source of the Jew's strength, but it is a strength divorced from love. It is strong by virtue of its narrowness, and to be a world religion it needs just that infusion of love which the greatest Jew supplied and the nation rejected.

Mr. Zangwill criticises Judaism with tenderness. His satire is at times playful, at other times moderately severe, but it is never mordant or pitilessly impartial. He is a Jew first, and afterwards a European. He is not blind to the faults of Judaism, and he does not hesitate to point them out, but, as has been remarked, he is rather the parent correcting the favorite child than the stern

critic. Accordingly he seeks, not so much to display the faults of Judaism as to make better known her virtues. Enough is said of her faults to acquit the critic of the charge of partiality, and her failings and virtues are only part of our humanity. Much we have inherited from the Jew, and lest we forget, it is well that a Jew like Mr. Zangwill, who is in full touch with our modern life, should speak out and show us the essential oneness of Jew and Gentile in the foundations of their religious faiths and in their endeavor towards purity of conduct. His is the voice of one protesting against hypocrisy and barren formalism, whether Christian or Jewish, and his protest should not be in vain.

ANTHONY HOPE.

Miss J. W. Carter, Elora.

Anthony Hope was introduced to the literary world in 1890 when his first book, "A Man of Mark," was published. Since then at least one book has appeared every year from the pen of this versatile writer. Such literary activity is the more remarkable that Anthony Hope does not claim to be *par excellence* an author. He is besides, a lawyer and a politician, who, to use his own words, finds the business of his life in the practice of his profession and in politics, his recreation in literature. One is tempted to wonder whether an author who throws off words with such facility will not sooner or later deteriorate as to quality, but hitherto no evidence of such deterioration has appeared.

His works may be roughly divided into two classes. The first, of which the "Dolly Dialogues" is the most pronounced type, consists of sketches of social life, written in a brilliant, entertaining style, displaying touches of satire and gentle cynicism, and full of very witty dialogue.

The second and more important class is that of romantic novels, of which the most famous are the Zenda stories, including "The Prisoner of Zenda," and its sequel, "Rupert of Hentzau," "Phroso," and the "Chronicles of Count Antonio." These are gay geographical romances showing wonderful novelty of imagination, full of thrilling adventures and romantic situations. Ruritania, the scene of the Zenda stories, reached by train from Dresden, as we learn, but existing entirely in the imagination, is an enchanted country, containing all the advantages of the nineteenth century together with the license and romance of the sixteenth. There the locomotive shrieks past a moated castle with drawbridge raised. There life is held at the sword's point, and duels and midnight encounters are matters of little or no moment. So, too, the story of "Phroso" is enacted in an imaginary island of the south, where, cut off from the rest of the world, the inhabitants are ignorant and superstitious as in the Middle Ages, addicted to feuds and violent passions, and owning an unfaltering allegiance to the governing

house—a fitting scene for the exciting and gruesome experiences recorded in that story. It may be objected by common sense and prejudice that the events of these stories are utterly improbable and extravagant; but, nevertheless, they have a wonderful power to carry us along with them, to sweep aside common sense and prejudice and to give an air of reality. We enter into the spirit of the book and seem, like the hero of Zenda, to be caught in the web of fate and hurried along regardless of our own wills. This sense of reality is due in a certain degree to the fact that the characters are natural even if the adventures are not, and also to a certain intensity and forcefulness of style which carries us on with the hero.

His best story is "Simon Dale," a more ambitious work than any of its predecessors, and combining the characteristics of the two classes before mentioned. It abounds in the same humor, delicate sarcasm, and charming dialogue as distinguishes the author's society sketches, while, at the same time, it is a record of exciting adventures and dramatic incidents. It lacks, too, the element of extravagance charged against the other stories; and at least the events are assigned to a period in which they have a greater air of probability.

His story of Simon Dale takes place in the reign of Charles II., and hinges upon the meeting of Charles and Louis at Dover, and the famous treaty there concluded between them. The hero, Simon Dale, a descendant of a country family in reduced circumstances, appears before us hampered by the doubtful honor of a prophecy made concerning him at his birth by an old hag who was supposed to be in communication with spirits, viz., that he should love where the king loved, know what the king hid, and drink of the king's cup. This prophecy is fulfilled by Simon's meeting Nell Gwyn in the country and conceiving a violent but passing affection for her; by his guessing the identity of King Louis, which Charles was attempting to conceal; and by his tasting a cup of poisoned wine which had been prepared for the king, and of preparing which suspicion rested on Simon. Interwoven with this is a love story, in which Simon woos, vainly for a time, and finally wins Mistress Barbara Quinton, a lady of the court whom he knew when a child.

The plot of this story is more complicated than that of Anthony Hope's other works, there are more rich interests, and more definite delineation of character. In the first place, there are

the historical characters, Charles II., with his shameless lack of honor, his love of pleasure, his good-natured cynicism, and his apparent aimlessness, but withal still keeping steadily in view his one aim of keeping his throne and baffling his rivals; his bigoted, sour brother James, the gay insolent Duke of Monmouth—all these are true to life. Nell Gwyn can hardly be called a historic character, but she is admirably drawn in the novel. She charms us with her winning ways and graceful boldness just as she did Simon in the garden of Quinton Manor. The Nell Gwyn of "Simon Dale" is a mass of contradictions. Her sins repel us, but we cannot help loving the sinner; she is greedy, but yet she is ready to help a friend; she is insufferably vain, yet she displays a womanly heart to poor Barbara when the latter is in distress; and there is a touch of irony in the haughty Mistress Barbara being forced to take help from a rival whom she despised, and, indeed, scorned to think of as such. Indeed, throughout the book Nell has the advantage over Barbara. The latter's consciousness of superior virtue does not prevent her jealousy, and her complete surrender to Simon at the end of the story seems hardly a compensation for her former treatment of him.

The hero Simon, is pre-eminently a man of discretion combined with a sometimes appalling frankness, who is said by one person to see too much and by another to compensate for it by appearing to see nothing—an honest gentleman, who, having nothing to conceal himself, cannot endure the network of deceit and falsehood which enwraps the court of Charles II., a man of high and unfaltering honor in whom the king's moral shamelessness creates an overwhelming sense of repulsion, a man whose very plainness and honesty gives him a high place among courtiers who dare never express their own opinions, and a high place in the esteem of sovereigns who know that they seldom hear the truth.

The leading characters of Simon's Dale are representative of those of his other works. They are of one type and bear certain striking resemblances. In the first place they are principally of the court or the higher ranks of life. There are few others appear at all, and when they do so, are of no importance. His ladies are all of the Dolly or Barbara type, reared in the lap of luxury, dainty, playful, charming in their self-will and petulance, but very unpractical as Barbara shows when she casts Simon's last guinea into the sea. Their waywardness is usually the cause of the many difficulties which arise, while they themselves form the incentive which en-

courages their lovers to untangle the network of difficulties in which they become involved.

So, too, with Anthony Hope's male characters. Whether it be Rudolf Rassendyll, raised at one bound to the throne of Ruritania —with what dignity, what ease, he performs all the duties of a sovereign and fulfils all those requirements of etiquette and precedence which only a life-long training can give. How he kings it during his brief reign! Or whether it be the gentle Count Antonio, or reckless, handsome Rupert of Hentzau, or Simon Dale, fresh from a retired country life and plunged into the gay court of Charles II., they are all to the manner born—courtly, gracious, skilled in compliment, brilliant in repartee, perfect in the courtier's art of suggestion and concealment, of boundless resource, and all lovers of stout blows. Withal, the heroes of these stories are all animated with the same high sense of honor. This sense of honor is usually brought into conflict with their love. Rudolf's honor compels him to rescue the king from prison and give up Flavia, and drives him again to the same renunciation of which the decision of heaven prevents the fulfilment. So, too, Count Antonio sends back to his enemy his love Ursula, who has made her escape under circumstances which he deems not strictly honorable. They have, too, that characteristic which Carlyle ascribes to all heroes, a cheerfulness of disposition in all situations, as though they had already tried conclusions with fortune and now dreaded nothing which she could bring upon them.

Anthony Hope claims Sterne as the model of his prose, and the resemblance between them is evident in several ways, of which perhaps the simplest is in frequently having the story told in the first person. It is remarkable, too, that the hero does not suffer from this. Even in the Dolly Dialogues where the speaker represents himself frequently in a somewhat disadvantageous light, we never feel that he is ridiculous. He resembles Sterne also in placing himself, as it were, on a familiar footing with his readers, taking them into his confidence by means of little asides, given in parentheses, or by moral reflections on the conduct of his heroes, which might be given to a friend with whom the author was on a more familiar footing than the characters of the book.

Some of his books are distinguished by a quaintness of phraseology. This peculiarity is carried to excess in Count Antonio, where the extreme simplicity and arrangement of the words suggests the scriptures as a model. (This is due probably to the fact that a monk

relates the story). It is used to a less extent in Simon Dale, where the antiquated style is heightened by the structure of sentences in which occurs a succession of clauses dependent one upon the other until the main statement is almost lost sight of. But in a description of incident these lengthy, involved sentences change to terse rapid statements. He has the power to make a scene live before us with a few strong, rapid touches or a skilful selection and arrangement of details. We hold our breath as Simon is marched between two soldiers to that dimly lighted room with its faded tapestries, as he scans that array of faces gathered about the table, notes the stain on its surface, the paper between the two kings, and finally, as he puts the fatal goblet to his lips! We almost hear the crash as M. de Perrencourt strikes it from his hand. A rich supply of telling epithets is at this author's command. Rupert of Hentzau is described with eight adjectives—reckless and wary, graceful and graceless, handsome, *debonnaire*, vile, and unconquered.

Of the art of dialogue Anthony Hope is complete master. Whether it be a social gossip interspersed with playful malice, ironical insinuation, or dainty compliment, a grave, curt discussion over a political situation, or whether Simon Dale is thrusting and parrying with the wits of the Court, every word tells, the dialogue is perfect. Indeed in that maze of intrigue and flattery, when the art of conversation was so often to conceal thought, or to reveal while apparently concealing, and when necessary to strike home with delicate, cutting irony, Anthony Hope's hero is entirely at home. The charm of the dialogue depends greatly on the fact that so much more is insinuated than is really expressed. In fact it is remarkable how few words are really used in comparison with the amount communicated. One means of accomplishing this is that of stopping abruptly, leaving the speech to be concluded by the other participant in the conversation. This may have one of two results. If the speakers are of one mind and understand each other, the conversation ends pleasantly; if, on the other hand, as often occurs, a misunderstanding arises the speakers become entangled in a web of false conclusions. Or a speaker may imply a great deal by an apparent negative, as when Simon Dale threatens to kill Louis rather than surrender Barbara into his hands. "You daren't," said the king. "I should be unwilling," replied Simon. And what a stinging rebuke is administered by a gentle irony as when King Louis says: "I also was accounted a gentleman." "Nay," Simon replies, "I took you for a prince."

A dialogue is sometimes rendered very amusing by a case of mistaken identity which gives an entirely different color to the most harmless expressions. This, of course, often occurs in the Zenda stories between Rudolf and the King, and one of the best of the Dolly Dialogues turns on the mistaking of Mr. Carter for Mrs. Hilary's husband, by the matron of a girl's school, and the false impressions made by a little friendly banter between the supposed husband and wife.

And now what is Anthony Hope's place among the authors of the present day? His works do not propound any startling religious belief, they offer no solution for the mystery of the world's woe, they expose no great existing evil, nor do they deal with the deep soul-moving passions which take possession of the human heart. It is true that his heroes have conquests to gain over self, but the author does not dwell upon these struggles. They are sharp but decisive. We get a glimpse of them and we know the result, but we are not shown all the workings of the tortured mind. Rudolf Rassendyll can take up life again after his renunciation of Flavia. When Simon Dale discovers that his pearl Cydaria is but the pebble Nell Gwyn, his disappointment makes a man of the light-hearted youth, but he is not overwhelmed by the shock, he is able to hold his woe at arm's length, and to take still an active interest in life. There is none of that marked pessimism which distinguishes so many modern novels. The author glances at the weaknesses of human nature, but with a sympathetic eye. The stories are eminently healthy in tone and the interest lies on the surface. Ruskin divides books into those of the hour and those of all time, and further into good, and bad books of the hour. In the former class of this second sub-division, Anthony Hope's works may be included. They are pleasant companions and afford excellent entertainment for a leisure hour.

DICKENS' INFLUENCE ON GUSTAV FREYTAG.

J. S. LANE, B.A., CHATHAM.

With the single exception of Shakespeare's dramas, no branch of English literature has exerted so much influence on continental writers as the English novel. Richardson, Fielding, Dafoe and Sterne have found enthusiastic admirers and eager imitators from Lisbon to Nijni-Novgorod, and have impressed their mark so deeply upon all succeeding romance, that it would be impossible to understand the development of the novel in Europe without a competent knowledge of the works of these great Britons. And what is true of the earlier English novelists is also true of those of the nineteenth century, and particularly of Scott and Dickens.

Nowhere has the study of the English novelists been more zealously pursued and more productive of direct results than in Germany. It has frequently been noted, both by German and foreign critics, that the German has ever been prone to look abroad rather than at home for his inspiration and his ideal. Just as at the present time, we find the political expression of cosmopolitanism, as exemplified in the Social-Democratic party, more fully developed in the Fatherland than elsewhere, so do we see in cultured circles a freedom from patriotic prejudice, and a readiness to acknowledge and adopt what is best in foreign literature and art. And even those Germans who have done most to establish a truly national literature and national literary ideals, have frequently made use of foreign models. Lessing did so, for instance; so did Freytag, the subject of our present essay.

Gustav Freytag was born in 1816, at Kreuzberg, in Silesia, where his father was Buergermeister. Kreuzberg is situated near the Russian frontier, about fifty miles east of Breslau. With the exception of two years, during which his father practised medicine at Pitschen, a town in the neighborhood, his childhood was passed at Kreuzberg, and here his education was begun. He learned to read very young by the help of his mother and an A B C book with a colored picture of a crowing cock on the last page. When the little fellow had learned his lesson well, he found in his book,

next morning, the groschen which the cock had crowed out for him. When he was about six years old, his uncle, Pastor Neugebaur, undertook to introduce him to the humanities, and in the parsonage he studied for the next seven years. The uncle attached but slight importance to any but classical learning. The natural sciences, mathematics, and the formal study of the vernacular were almost wholly neglected. Freytag cannot recollect that he ever wrote a German composition. But this does not seem to have stunted a natural tendency to authorship, for, at the early age of ten he tried his prentice hand on a novel. He had been reading Campe's "Robinson the Younger," one of the many imitations of "Robinson Crusoe," when he by accident discovered in his uncle's library a Latin translation of Dafoe's work. The fact that it was in Latin would have made it a sealed book to any boy of ten in the Western Hemisphere, but it was only a slight hindrance to the German pastor's nephew, who proceeded to read through the thick volume, and then to write what appears to have been a sort of "Swiss Family Robinson." A father, with his children, is cast away upon a desert island, where the children discover much that is extraordinary and adventurous. The author's favorite was Jack, one of the sons, who always found the best, was never at a loss, and always good-humored. Freytag was of the opinion that Jack was the ancestor of those jolly, dashing young fellows, who later danced around his desk, under the names of Kunz, Bolz and Fink. I should be greatly interested to know how much of the merry audacity and superiority to circumstances that characterize the later favorites were present, even in embryo, in a character conceived when our author was certainly not influenced by Weller, Tapley, Swiveller, and other creations of the English master. But the Robinsonade was never recorded in the lists of the Leipzig Booksellers' Exchange, and has, I fear, as utterly perished as the lost manuscript of Tacitus.

While the classical side of young Freytag's education was thus being cared for by his reverend uncle, another teacher, usually considered anything but reverend, was cultivating his imagination and presenting to his growing mind new and varied groups of pictures, ideas and emotions. The little theatre of his native town was frequently visited by strolling companies of greater or less merit, and Freytag was frequently allowed to visit it with his father, a great admirer of the drama. What impressed the young spectator most was not those effects by which the imagination is

chiefly stimulated, but the tangible representation of human life, the intelligible connection between guilt and punishment, speech and manners of the various orders of society and the idiosyncrasies of the characters.

When not quite thirteen, Freytag was sent to the gymnasium at Oels, where he remained six years. Here his classical studies were pursued and his education rounded off in other directions. He learned readily and found a good deal of time for miscellaneous reading. There was a small circulating library at Oels, of the shelves of which fiction occupied the greatest number, and where the best and the worst mingled in impartial promiscuity. Besides a couple of German writers his favorites were the Waverley novels, and the Leather-Stocking, and sea-tales of Fenimore Cooper His admiration for these authors was life-long, and he has expressed his great indebtedness to their delightful epic power, particularly to Scott's, from whom he first learned to appreciate the portrayal of character.

In 1835 he left the gymnasium and matriculated at Breslau. It had been anticipated that he would devote himself to classical philology, but Fate willed otherwise, and he soon turned to archæology and ancient art. and then, under the guidance of Hoffman von Fallersleben, to the study of German antiquities.

After a year and a half at Breslau he went to Berlin, where he completed his course and graduated. His dissertation was on the beginnings of the German drama.

While at Berlin he first made the acquaintance of Dickens, or Boz, as he always calls him. Dickens, who was four years Freytag's senior, had become a considerable figure in the Reporters' Gallery and the London newspaper world while Freytag was still at the gymnasium. The "Sketches by Boz" were published in 1836, and "Pickwick" that year and the next. Both works had been as favorably received in Germany as in England or America. It is accordingly no wonder that the kindred spirit of the Berlin student should have at once been attracted by the delightful, if somewhat extravagant, figures that were marching in triumph through the world. The first mention that Freytag makes of Dickens is in connection with a visit that he and two or three other students made, in the summer vacation of 1837, to the country home of one of their college friends. He is describing their meeting with the female members of the family, on which occasion all the young people appear to have felt, at first, a little

shy and embarrassed: "Then we stroll through the garden with the daughters of the house. Emma asks questions and converses; Julia displays girlish enthusiasm; Marian and Sophia, the young gazelles, speak to each other silently by stolen glances, and a good spirit busily hovers around us and benevolently furthers our better acquaintance, and this spirit is Mr. Pickwick. We recognize that we are moving in a realm in which Boz rules as King, and then we are looked at roguishly by the young ladies to see if we bear any resemblance to dear Mr. Pickwick's companions. But we bear no other than that of considering Sam Weller the acme of all servants; we begin to feel at ease, and prove ourselves to be, on the whole sufferable and human."

This first reference to Dickens is the longest of the half-dozen that Freytag makes. Others which occur in his "Recollections" are a comparison of the Molinari brothers of Breslau to the Cheeryble brother in "Nickleby," and some remarks on the unfavorable effect on the author's art of publication in monthly parts or other serial form, as was the custom of the English novelists of the time. He mentions Dickens as a notable example of the practice, which he criticises severely as having a most pernicious effect upon both writer and reader. Dickens is mentioned again in connection with Seybt and Schmidt, Freytag's friends and collaborators on the "Grenzboten." Seybt was a well-known translator of Dickens, Schmidt an enthusiastic admirer of his descriptive coloring. The only other reference in Freytag's collected works is in "Den Journalisten," where Ida speaks of Boz as the Colonel's favorite author, and one of the new dahlias is named after him. It is not always safe to draw conclusions as to an author's opinion from words uttered by his characters, but as the introduction of this remark would be utterly senseless unless it was meant as a public tribute of admiration, we are justified in considering it an expression of Freytag's own judgment.

When Freytag left Berlin he carried with him two unfinished plays, one of which was afterwards completed, but never published or played. He was soon appointed a lecturer on the German language and literature in the University of Breslau, a position which he held until 1844, at the same time taking part in several social and philanthropic movements, and writing a number of lyrics and a drama. The lyrics were published in 1845, under the title "In Breslau." The drama, "Maximiliens Brautfahrt," was produced in 1842, under the following circumstances: Freytag had taken an

episode from Fugger's epic, "Ehrenspiegel des Hauses Oesterreich," and had written the play in 1841. The piece was just completed when the Court Theatre at Berlin offered a prize for a comedy, the subject of which was to be modern. Freytag's comedy did not fulfil this condition, but thinking that it could do no harm, at least, he submitted it anonymously as required. The following March the announcement was made that instead of a first and second prize being given, as originally intended, four equal prizes had been awarded, and the "Brautfahrt" had won one of these. The play was produced in due course, but was unsuccessful, although it possessed considerable merit. Its chief defect is that Kunz von der Rosen, the author's favorite character, and in a certain sense the hero, is only a subordinate personage in the play. Kunz is one of the characters of Freytag, who clearly betray a relationship to the humorous creations of Dickens. With imperturbable good-humor and never-failing wit, he is in mien and language a German Sam Weller. When the "Brautfahrt" was written, the Sketches, Pickwick, Twist, Nickleby, the Old Curiosity Shop and Barnaby Rudge had appeared.

Freytag now thought seriously of literature as a vocation, and during the next couple of years he produced several minor pieces, a prologue, an opera-book, a political farce, etc., and began a drama, only the first act of which was completed. In 1844 he resigned his position as lecturer. In 1846 "Die Valentine" was written, in 1847 "Graf Waldemar." Encouraged by the success of these plays, and feeling that he had at last mastered the technical part of the playright's art, Freytag now entertained the hope of writing a play every year, and of commanding an honorable position in German literature.

The troublous state of German politics in the following year, however, turned his attention from authorship to journalism, and he became a joint-editor (with Julian Schmidt) of the *Grenzboten*, with which he was connected until 1870. The *Grenzboten* was a weekly review devoted mainly to political and literary matters. It was brilliantly edited and had many able collaborators, but although it exercised a great influence throughout German-speaking Europe, it never attained the eminence of the leading English and French reviews.

The air of Leipzig did not agree with Freytag, and by the advice of his physicians he determined to pass the summer months in the country. In 1861 he bought a house at Siebleben in Gotha, and

here he spent his summers for many years, occupying himself with friends, books, a garden and his pen, as Cowper puts it. Here in 1852 he wrote "Die Journalisten," the success of which was immediate and lasting. Of the characters of this play Bolz is the one who owes most to the author's study of Dickens. I can here merely note a superficial but suggestive trait—Bolzens use of that turn of simile which Mr. Pickwick's faithful servant so often used: "Nichts ueber kaltes Blut, wie der Salamander brummte, als er im Ofenfeuer sasz." Piepenbrink, too, is another of those eccentric characters in whom both the great humorists delighted.

In 1854 "Soll und Haben" was written, Freytag's first and best novel. Just as in the Elizabethan period the drama was not considered a dignified, scarcely indeed a serious, form of poetic creation, so in this century the novel was looked down upon in Germany. And yet we find Freytag, at the height of his dramatic fame, turning to the despised novel, and he himself considered it probable that in the future the prose romance, as developed since Scott's time, would be considered the greatest and most remarkable advance in the literature of the nineteenth century. To this conclusion he had come chiefly from a study of the English novelists, and particularly Dickens and Thackeray. The great French novelists he did not appreciate—perhaps he was too much of a Prussian. The only Frenchman to whom he ever acknowledged any obligation was Scribe, whom he honored as a past-master of dramatical technique.

Besides Freytag's second novel, "Die verlorene Handschrift," I can only mention the other products of his versatile genius; his tragedy "Die Fabier," "Die Technik des Dramas," the "Bilder aus der Deutschen Vergangenheit," and that splendid series of historical romances "Die Ahnen." In another place I hope to show how these last have been influenced by our later English literature, but I must now confine myself to pointing out a few specific instances where he has directly and unmistakably followed Dickens.

Take some examples from "Soll und Haben." Veitel Itzig is very like Uriah Heep, although not quite so 'umble. Both are red-headed, freckle-faced, crafty and cringing. Both seek to involve their employers and to marry their employers' daughters. Itzig's villainy was more ambitious and daring than Heep's and his end more tragic. The deaths of Itzig and Lobel Pinkus, his tutor and tool, remind us irresistibly of the drowning of Quilp. The days which elapse between the night when Itzig flings Pinkus from the old staircase into the dark waters of the Oder, and the night when

he himself, hunted by the police, is borne away by its icy flood while endeavoring to gain a waterside refuge, are the days that Bill Sykes spent after Nancy's murder. Sykes is pursued from place to place by Nancy's face as it lay in the light of the window, Itzig by the old man's hat as it floated off on the swollen stream. Both Sykes and Itzig, driven by the furies of remorse and fear, compass their own violent deaths while endeavoring to escape. The antagonism between Heep and Copperfield is paralleled by that between Itzig and Wohlfahrt, the friendship of Copperfield and Steerforth by that of Wohlfahrt and Fink. Wohlfahrt introduces Fink to the Ehrenthals, as Copperfield introduced his friend to the Peggottys. Wohlfahrt, however, has sharper eyes and more strength of character than Copperfield; he detects the *liaison* between Fink and Rosalie Ehrenthal before irretrievable mischief has been done, and forces his friend to break with her. Like Steerforth, Fink is an admirable Crichton; he is in fact Steerforth at a later stage of development. Dickens was forced to destroy Steerforth; the English public would never have tolerated the Little Emily episode being treated as a stepping-stone by which a character rises to higher things. Hence Steerforth's death, the necessity of which perhaps is scarcely apparent to the Continental mind. Fink, tiring of his dissipated life in New York, takes passage on a sailing vessel as Steerforth did, but instead of being wrecked on the Yarmouth coast, or Sandy Hook, as would have been more appropriate in his case, he shoots condors in the Andes and drives cattle on the Pampas, until his whereabouts becomes known and he returns to his friends. Under the influence of Wohlfahrt and Schroeder he redeems the past by devoting his talents and energy to the cause of civilization and justice, and we find him overthrowing swindling American land companies, and championing well-ordered German industry against the slip-shod ways of the Slav.

Fink's adventures in the United States, after his uncle's death, are directly taken from Martin Chuzzlewit. The company in whose affairs Fink was involved, is the company represented by Mr. Scadder and General Choke; the Tennessee swamps, where Fink dry-nursed the Irish orphans, were the Chuzzlewit Eden, and the original nurse is Mark Tapley, at Eden and on board the *Screw*.

Other characters in "Soll und Haben" who are sealed of the tribe of Charles, are Pix and Specht, the porter Sturm and his son, the old forester and even Lenore's pony, and the spirits that dwell in the old warehouse at Breslau.

Freytag was an original genius and not guilty of common plagiarism, but in fiction, as in his historical researches, he took his materials wherever he found them most convenient. He did not put his friends and acquaintances directly into his books as Dickens frequently did, but on the other hand he had no diffidence about incorporating an already noted trait or incident if it seemed to him consistent and useful to do so. Almost equal to Dickens as a humorist he is superior to him in literary taste and the development of character and motive. He never allows his sense of humor to master him and drag him into the grotesque and grossly exaggerated, and he excels his great English contemporary in treating his good and bad characters with objective impartiality, as an artist rather than a moralist.

NATURAL SCIENCE SECTION.

DYNAMOS.

THOS. H. SMYTH, M.A. (Tor.), B.Sc. (Edin.), TORONTO.

There are three agencies which must be considered in the generation of a current by a "Dynamo" or "Generator":

(1) Mechanical Motion.
(2) Magnetism.
(3) Current Electricity.

The devices necessary to bring about their coöperation are various, but consist essentially of (*a*) an electromagnet, the simplest form employed of which is bipolar and horseshoe-shaped, with cheeks of soft iron forming a circular or cylindrical space in which rotates (*b*) the armature. This consists of a soft iron core in the form of a ring on which is wound insulated wire, and its extremities are connected with the external circuit and sometimes also with the wire of the electro-magnet. A pulley, connected with some form of engine, is employed to cause the armature to rotate.

When a current is said to flow through a wire it creates a "field" of force external to the wire. This is shown by the deflection of a magnetic needle (fig. 1) or by the arrangement of concentric rings of iron filings formed upon a horizontal sheet of paper pierced by a conductor through which a current is flowing. In fig. 1, *A* is a cross-section of a wire in which the current is flowing; *S N* indicates the position the needle will take. In the case of a long straight wire carrying a current, the intensity *H* of the external field varies directly as the strength of the current, and inversely as the distance of the point in the field from the wire. This has been determined by experiment. It may be expressed thus: $H = \frac{2i_a}{r}$ dynes,

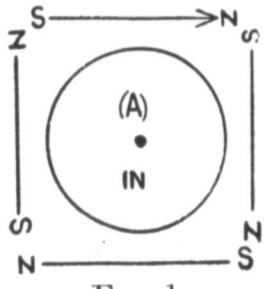

FIG. 1.

where $2i_a$ is the current in absolute C.G.S. units, *i.e.*, in deca-ampères, r being in centimetres. If the conductor is bent into a complete ring, the intensity of field at the centre of the ring will be $H = \frac{2\pi r i_a}{r^2}$ dynes. And if $r = 1$ cm. and a current of one deca-ampère flow through one centimetre arc of a circle of wire whose radius is one centimetre, the intensity of the field at its centre is such that it would repel a unit magnet pole at the distance of 1 cm. from it with the force of a dyne.

(A unit magnet pole repels a similar pole of the same strength at the distance of a centimetre with the force of a dyne.) This intensity of field at the centre of the circle referred to is called "unit field"; and the lines of force which radiate outwards from this centre, if they pass through the surface of a sphere of one centimetre radius, will pass through 4π square centimetres. The density of the field at the surface of this sphere is $\frac{1}{4\pi}$ per square centimetre. This is taken as "unit of field density," and is called the "Gauss." It is assumed that one line of magnetic force passes through this square centimetre, and this is called "unit of magnetic flux" or a "Weber." Every unit magnet pole, therefore, at the distance of a centimetre from the pole, produces a magnetic flux of one Weber. The unit of magnetic flux, or one Weber, equals $\frac{10}{4\pi}$ practical electromagnetic units, because the C.G.S. unit of current is equal to 10 ampères. If the straight bar magnet be bent to form a horseshoe the lines of force, instead of travelling through the air from pole to pole the whole length of the magnet, traverse the short space between the approximated poles. The magnetic resistance is, therefore, small; and it is still further diminished by the armature ring. The only air spaces across which the lines of force must pass are between the cheeks of the electromagnet and the armature core; these are called "gap-spaces."

The magnetic circuit of a dynamo then consists of the soft iron core of the electromagnet, the gap-spaces, and the armature core. The "reluctance" of the magnetic circuit, therefore, is small, and the useful flux, or lines of force in Webers, may be determined.

Let φ = total number of Webers cut by N_c.

N_c = number of conductors on the armature,

= $n_c \times n_a$ for "ring," and $2 \times n_c \times n_a$ for "drum" armatures where

n_c = number of commutator divisions, and

n_a = number of turns of wire for each commutator,

N = number of revolutions per minute, and

n'_p = number of bifurcations of current in the armature, *i.e.*, the number of pairs of armature portions connected in parallel;

then 1 conductor in 1 revolution cuts 2φ lines of force, the armature makes $\frac{N}{60}$ revolutions per second $\therefore$ 1 conductor in 1 second cuts $2\varphi \times \frac{N}{60}$ lines. Each one of the $2n'_p$ parallel portions contains $\frac{N_c}{2n'_p}$ conductors in each of these $2n'_p$ armature circuits $\therefore$ $\frac{N_c}{2n'_p}$ conductors in 1 sec. cut $2\varphi \times \frac{N}{60} \times \frac{N_c}{2n'_p}$ lines.

But, according to law of divided circuits, the E.M.F. generated in 1 parallel pair is the voltage of the machine ∴.

$$E' = \frac{\varphi \times N_c \times N}{n'_p \times 60 \times 10^8} \text{ volts, for volts} = \frac{\text{number of C.G.S. lines cut per sec.}}{10^8}$$

and from this we obtain φ, the useful lines required to produce the E.M.F. of E' volts by transposition, thus: $\varphi = \frac{6 \times n'_p \times E' \times 10^9}{N_c \times N}$ Webers.

In bipolar machines with 1 pair of parallel circuits in the armature $n'_p = 1$.

The next element in the study of the dynamo is that of induction of currents by motion of the circuit of wire in the magnetic field. The portion of the circuit made to rotate in the field is the wire of the armature.

If a magnetic field is uniform, such as practically exists between the poles of a horseshoe electromagnet, and a circular or rectangular wire is moved along the lines of force passing from the north pole of the electromagnet to the south pole enclosing them, just as the wire might surround a beam of light and be moved from end to end of the beam, no increase or decrease in the lines of force which the wire embraces could take place, and, according to the laws of induction, no current would be induced in the framework; but if it were moved across the lines of force so that less lines would pass through the framework, just as only a portion of the beam of light might be allowed to pass through it by moving the framework across the beam, this diminution or increase of lines of force embraced by the framework would induce in it a current of greater or less strength according to the rate of change of lines embraced, *e.g.*, if it cut twice as many at one time as it does at another time per second, the current would be doubled or halved.

Another way in which this change of rate could be made would be to cause the framework to rotate on an axis, horizontal, as shown in fig. 2. The cross-section of only one side of the framework is shown at (*a*); *A*, *B*, *C*, *D*, etc., represent the lines of force passing from north pole *N* to south pole *S*. When the framework moves from a vertical to a horizontal plane the number of lines embraced at any moment changes from a maximum to zero and from zero to a maximum; but the rate of change, it should be noted, is least when the framework passes through the vertical plane at (*a*), for it will cut less lines of force in moving through the same angle than at any other plane; for the same

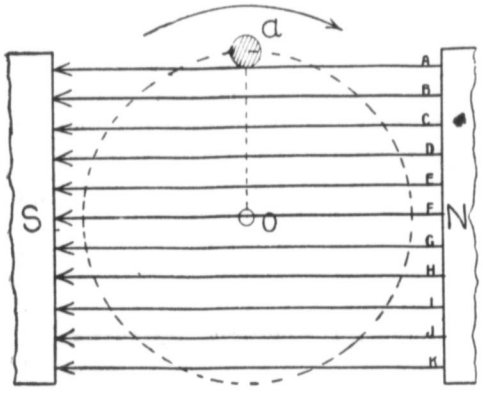

FIG. 2.

reason the current is strongest when in the horizontal plane, because, for the same angle described, it cuts here the greatest number of lines (F).

The conductor or inductor (a) of the framework will be opposite to a corresponding inductor in the drum armature; but in the ring armature half the wire is inside the core and is, therefore, unaffected by the lines of force, as none cross the space within the ring (see fig. 11).

The instantaneous value of the current in any coil or turn of wire can be determined. The rate of increase or decrease as the wire approaches or recedes from F (fig. 2) is obviously proportional to the sine of the angle between it and the highest point when above F, and the lowest point when below F. The instantaneous value of the E.M.F. necessarily increases in the same way; so that if E' be the maximum E.M.F. we have E' sin $O° = O$ is the E.M.F. when the wire is at (a), or opposite (a), and E' sin $90° = E'$ is the E.M.F. generated in the wire

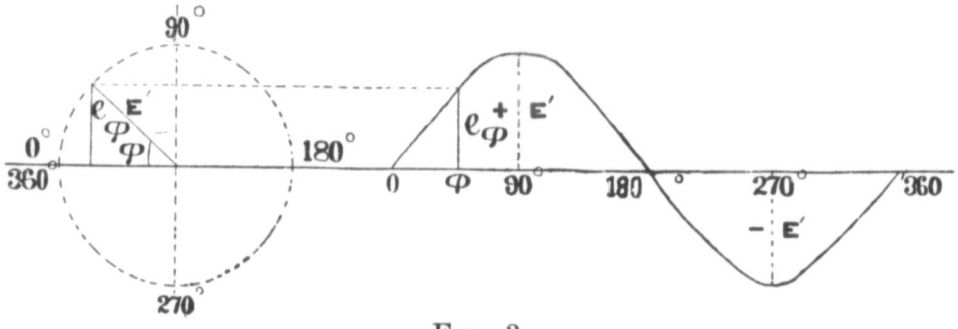

FIG. 3.

when cutting the lines (F), and E' sin $45° = \frac{E}{2}\sqrt{2}$ when the wire is midway between vertical and horizontal planes. When the E.M.F. and

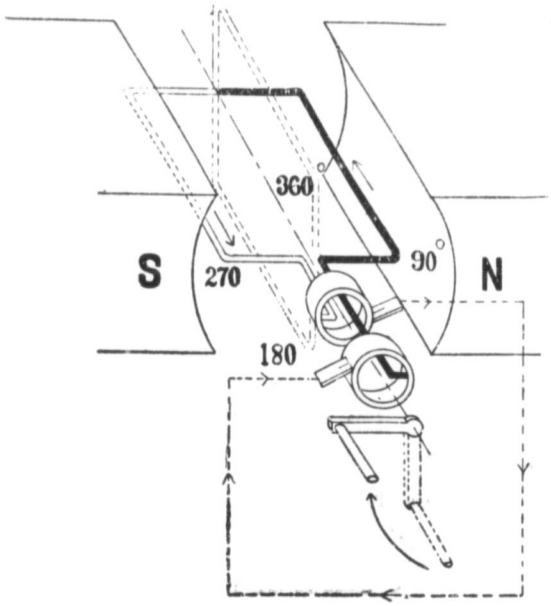

FIG. 4.

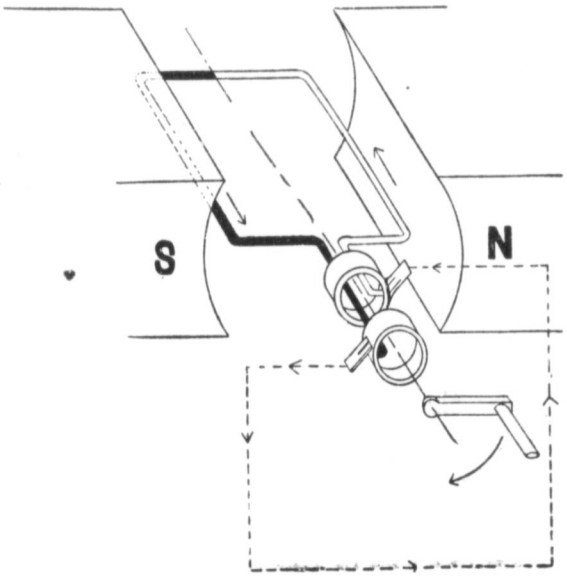

FIG. 5.

the position of the wire coils are plotted, a curve is formed called the sine wave, or sinusoid (fig. 3), which will be more clearly understood by studying figs. 4 and 5.

The currents generated in the wire framework by turning the crank can be carried off into external circuit, as a direct current by commutators, or by two rings (figs. 4 and 5), when we wish to obtain the ordinary alternate currents generated by the rotatory motion. The direction of these alternate currents can be readily determined by applying Fleming's law. In the word "thumb" is the letter *H* (referring to lines of force which are always assumed to flow from *N* pole to *S* pole—fig. 2). In the word "middle" (finger) is the letter *M* (refers to motion of framework), and in the word "forefinger" the letter *F* (which refers to direction of flow of current). If we place thumb, middle finger, and forefinger of the right hand in three directions at right angles to each other, as if placed along the edges of a box at a corner, and the thumb points from *N* pole to *S* pole, and the middle finger points

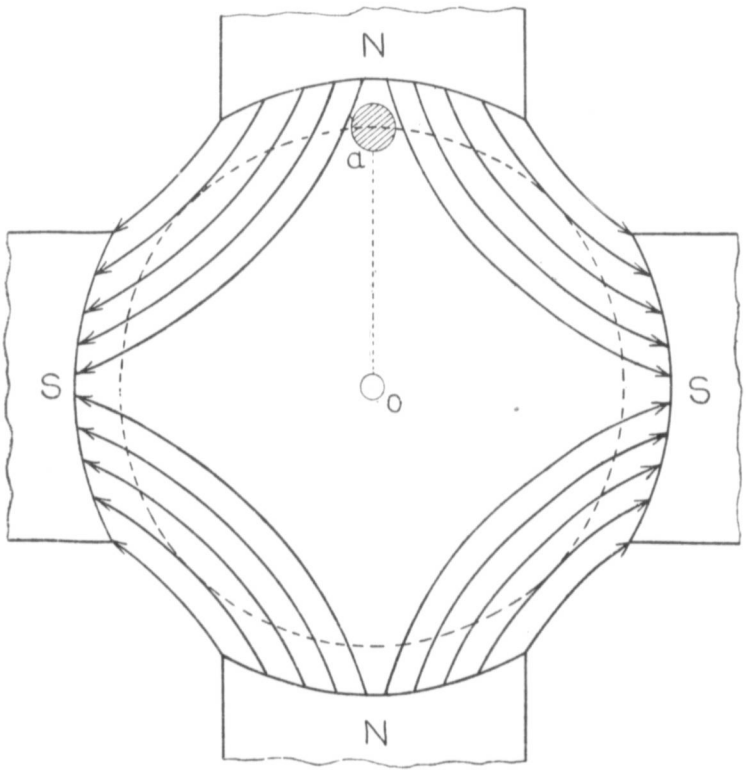

FIG. 6.

in the direction of motion, *i.e.*, downwards (in fig. 4) if we consider the black portion of the wire frame, then the fore-finger must point in the direction towards which the current flows. We see from this that the current flows in the same direction in all the coils on one side of the line which lies between the two points of zero, E.M.F. on the right hand, and on the left hand similarly, but in the opposite

direction, because the direction of the darkened branch is now upwards (fig. 5). The direction of the current, therefore, is always changed in passing the zero point of E.M.F. For dynamos the right hand must be used, and for motors the left. It will also be seen, by referring to fig. 6, which represents a multipolar dynamo, that the alternations take place more rapidly.

In a single coil, arranged as in a drum armature (fig. 7), fluctuations of current and of E.M.F. must take place, and are of a magnitude which may be calculated.

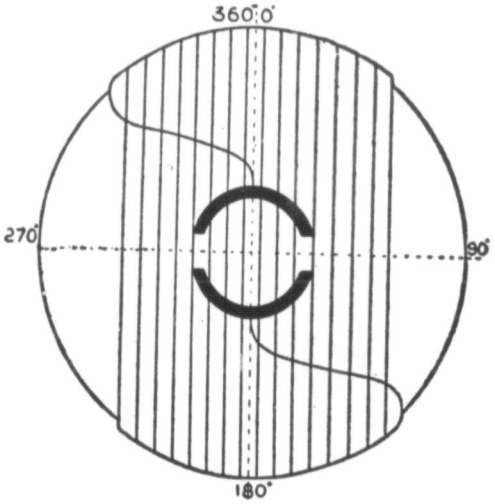

FIG. 7.

In a two-coil drum armature, made by dividing up this single coil into two halves (fig. 9), and placing them at right angles to each other, the fluctuations will be less than in the single coil. For a continuous current it requires a four-division commutator. If E' be the maximum E.M.F. of the single coil, the minimum is zero; in the two-coil the minimum joint E.M.F. will be (e') min. $= \frac{E'}{2}$, *i.e.*, half the maximum of the single coil. But the total maximum E.M.F. of the two-coil is not the sum of the individual maxima of each coil, because they do not reach their maxima

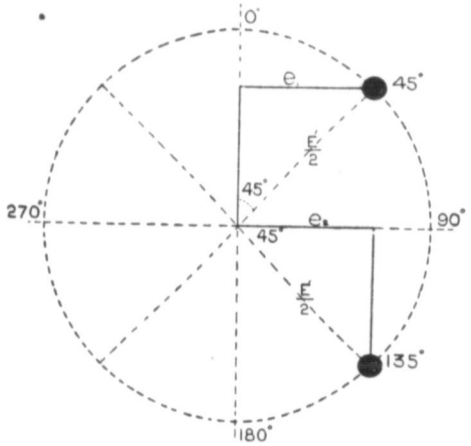

FIG. 8.

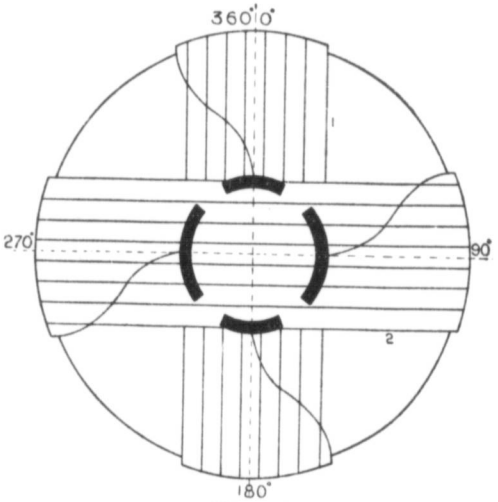

FIG. 9.

at the same time. Their joint maximum value will be when the coils are at 45° from the two zero points in a bipolar dynamo, fig. 8.

$$(e') \text{ max.} = (e_1)_{45} + (e_2)_{45}$$
$$= \frac{E'}{2} (\sin 45° + \cos 45°)$$
$$= .70711\ E'$$

The mean E.M.F. is

$$(e') \text{ mean} = \tfrac{1}{2} (e' \text{ min.} + e' \text{ max.})$$
$$= \tfrac{1}{2} (.5 + .70711)\, E' = .60356\, E'$$

The fluctuation, therefore, with a four-division commutator is

$$\left.\begin{aligned} \frac{e' \text{ max.} - e' \text{ mean}}{e' \text{ max}} &= \frac{(.70711 - .60356)\, E'}{.70711\, E'} \\ \frac{e' \text{ min.} - e' \text{ mean}}{e' \text{ max.}} &= \frac{(.5 - .60356)\, E'}{.70711\, E'} \end{aligned}\right\} = 14.65\%.$$

If each of the two coils be again divided into four coils, making angles of 45° with each other, they will require an eight-division commutator. With these the fluctuation is found by calculation similar to above to be only 3.86%; so that by increasing the number of coils the fluctuation becomes less and less. For a single coil it is 50%; for two coils, 14.65%; for four coils (fig. 10), 3.86%, and for 360 coils the fluctuation is scarcely perceptible, *i.e.*, if the currents are commuted and passed through a galvanometer, the deflection should remain almost stationary with a 360-coil drum armature. Although the instantaneous value of the E.M.F. in the coils connected with the brushes is zero, the E.M.F. flowing to the brushes from these coils is the mean E.M.F. generated in all the coils, and this mean is only imperceptibly different from the minimum or maximum E.M.F. developed in 360 or more coils, when these coils are in series.

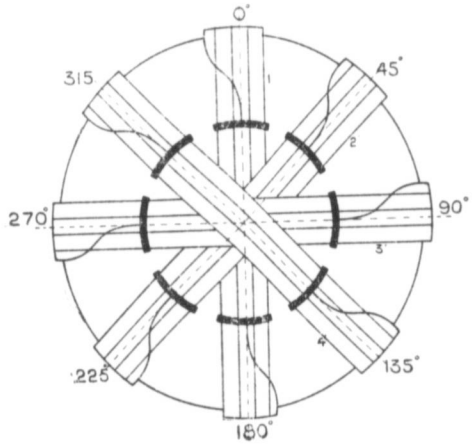

FIG. 10.

In the bipolar dynamo these coils form a double path by which the current travelled before entering, and again on leaving, the external circuit (fig. 11); so that if you attached two spirals in parallel to the extremities of a wire, the wire would represent the external, and the spirals the internal circuit. The loop representing the coils shows that the internal resistance is less (being in multiple) than it would be if the spirals were placed end to end.

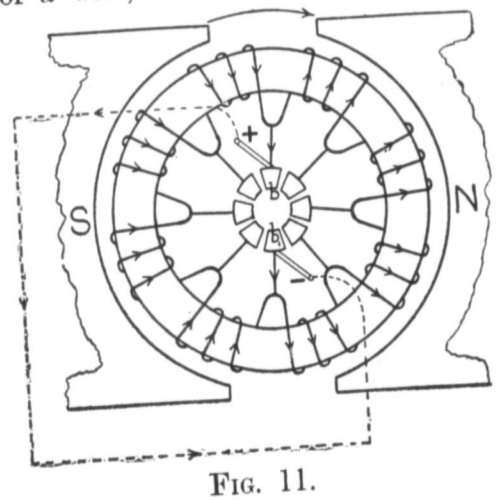

FIG. 11.

The act of commutation necessary for the production of a continuous current consists in a coil, on touching the brush through its commutator bar, becoming short-circuited through two bars being touched simultaneously, as (*e*) and (*f*), fig. 12, the coil *V* being short-

circuited as the current will pass fro ı (*e*) to (*f*) by the metal brush which offers no resistance; and the next moment an opposite current is generated in the coil as previously explained, the coil being now in the other half of the armature.

Production of sparks is apt to occur, and is due to self-induction, *i.e.*, it is impossible to start, stop and reverse a current instantaneously. The

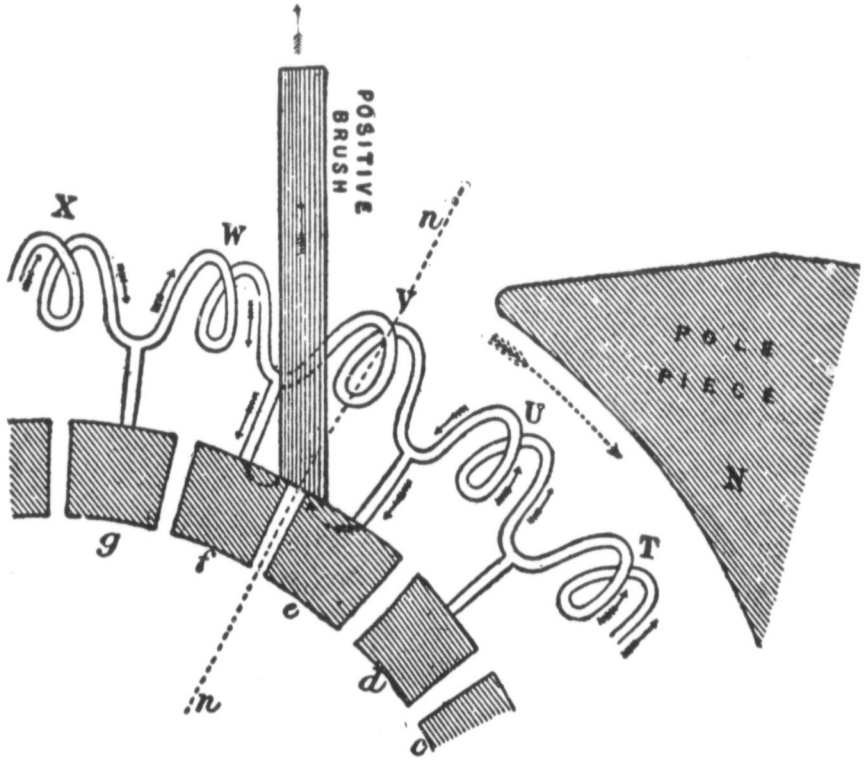

FIG. 12.

commutator bars appear burnt on the edge, which the brush leaves as the armature rotates. In fig. 12 the coil *U* carries a current into the bar (*e*) of the commutator, and the coil *W* carries a current into (*f*), while *V* is idle if this coil is in the neutral line or plane *n n'*, as represented in the figure, where no current is induced in a coil as previously explained under fig. 2. As *V* leaves the neutral line (the armature rotating clockwise) the current from *U* will enter it; but as it cannot rise to full reversed strength instantaneously, owing to self-induction, the current which should flow through *V* to (*f*) dashes across to the brush from (*e*) as an extra current. If the coil and brush are on the left of the neutral line, and the coil *V* is therefore no longer an idle coil as it is cutting magnetic lines, then as the coil is short-circuited by the brush moved also to the left of the neutral line, an E.M.F. acts in it, which would produce a very strong current in the coil (which sometimes is the cause of coils being burned out); for, suppose the E.M.F. to be 5, and the resistance, which is necessarily small, to be .001, the current produced

would be 5,000 ampères. To stop, start and reverse would now be still more difficult, and the sparking would be increased.

Let now the brush be fixed on the side of the neutral line into which the commutator bars move, so that a current moving in the opposite direction is set up which will neutralize and so stop the left-hand current and start enough right-hand current to bring the current in the coil up to the strength of the current which enters the coil when the brush no longer short-circuits it. The sparking will thus be minimized.

Too much advance of the brush would again cause sparking, as then the coil being in a denser field would generate a current under short-circuit which would be stronger than the current entering; besides, the currents in the coils next the brush would neutralize some of the currents to the left of the neutral line, and so weaken the main current.

ADDRESS OF HONORARY PRESIDENT, W. H. PIKE, M.A., Ph.D., TORONTO.

I have been thinking over the progress and changes which have occurred in Chemistry in my own experience. In looking over my books the other day I came across an old school text-book, and found the date (written in it when I bought it) was 1866—thirty-three years ago. The sight of it set me thinking over the change which thirty-three years of Chemistry have produced.

The changes, as far as the main theories and objects of Chemistry are concerned, are, after all, not very striking—rather more of the nature of development than change. The same doctrine of elements and their combinations, the same atomic and molecular theory to explain these combinations, exists to-day as then.

There had, however, in the few years just previous to 1866, been a most important change in the history of the Atomic Theory, and the text-books of that date bear evidence of it. I mean the establishment of a logical method of arriving at the atomic weights from the combining ratios of the elements—commonly spoken of as the doubling of the atomic weight of oxygen; and most of the text-books of that time had the symbols of those atoms, the atomic weight of which had been changed, marked by a horizontal line through the letter, thus C̶, O̶, etc. I suppose special type must have been cast for the purpose.

The first text-book in my library to use these crossed symbols is Limpricht's "Organic Chemistry," published in 1860; and the latest using the old atomic weights, with O = 8, and water with the formula HO, is Fremy's "Encyclopedia," commenced in 1882 and still being issued this year.

The exact date at which the new atomic weights were generally accepted seems somewhat hard to fix. It comes within the last thirty years, and like most changes occurred slowly. The *Jahresbericht der Chemie*, which attempts to give a complete summary of the work of each year, had the old atomic weights up to 1862; in the next year there was a partial double list of values, with the symbols crossed for new values; and in 1864 a complete double list—and not until 1873 were the symbols used as we use them at present. What date the historian of the future will assign to the change I cannot guess.

It needed a good deal of dexterity in those days to convert the old formula into the new, and of course the chemist had to carry in his mind two formulæ for each of the commoner substances. An excellent test of a student's ability to use formulæ may be made by asking him what the formula of any substance would become if the atomic weights of the elements be given new values.

A feature of this change seems to me to be quite underestimated by the historian, namely it supplied a distinct scientific method for arriving at the atomic weights, whereas up to this time the methods had been empirical and arbitrary. It is curious that the change did not come earlier, for, when one looks in any old text-book at the list of organic compounds, more particularly in the case of the homologous series, the constant difference of C_2 and O_2 must have attracted the attention of all chemists to the anomaly of a theory demanding increment by single atoms, and yet a whole department in which this was not the case—and it must be remembered that it was an organic research that mainly brought about the change—I mean Williamson's research upon the Compound Ethers.

The most distinct advance that has occurred in my time, is the establishment of the theory, that the properties of probably all substances, certainly of all organic compounds, are due both to the position of the elements as well as to their nature. The establishment of this theorem seems to me to be of the first importance in the history of Chemistry, both from its theoretical bearings as well as from the effect it has had upon the growth of the science. The investigation is still going on, the last phase being the recognition that not only the sequence of the atomic linking decides properties, but that properties are also decided by their arrangement in space. So that properties may vary if, with the same set of atoms in the same sequence, the axis of symmetry be twisted—the simplest case being the difference between

$$\begin{array}{c} \text{n} \\ | \\ \text{m} - \text{C} - \text{p} \\ | \\ \text{o} \end{array} \qquad \text{and} \qquad \begin{array}{c} \text{o} \\ | \\ \text{m} - \text{C} - \text{p.} \\ | \\ \text{n} \end{array}$$

The models which we use to illustrate this proposition as true of geometrical solids, as well as of chemical compounds, are here on the table.

The earlier attempts to depict the arrangement of atoms were peculiar. Naquet, whose text-book I used at one time, used to draw a carbon atom like a sausage, with three constrictions, thus, ⬭⬭⬭⬭, so that one had to learn a new notation in order to read the book.

The most important of the various constitutional formulæ in its effects upon Chemistry has certainly been the benzene theory of Kekulé. It is difficult to appreciate and impossible to convey to beginners the marvellous volume of work which has arisen from this theory. Thousands of compounds have been synthesized—the suggestion for each research being almost entirely due to this theory. The same, in a less degree, is true of the theory of naphthalene and anthracene.

Whether Chemistry is much better off for the surplusage of verification of the constitutional theory afforded by the preparation of the many hundreds of thousands of compounds still produced—dyes, essences, drugs, ethers, acids, bases and so on—is perhaps open to question.

One result which has always impressed me, and one which seems to have escaped attention of late years, is the establishment of the atomic theory on a very different footing to that upon which it was before this verification.

I notice in the German periodicals a tendency, particularly among the pupils of Ostwald, Professor of Chemistry at Leipzig, to question the necessity of the atomic theory—indeed, to assert that it is inconsistent in itself, and that the various laws of combination of the elements may be explained without appeal to it—but no one of the objectors ever mentions organic chemistry or tries to even hint at an explanation of the successful syntheses, made, as I have said, by the hundreds of thousands and all based upon the atomic theory of to-day, not upon the bald assertion of a theory of atoms such as Dalton left it, but upon an assumed knowledge of the relative position of the various atoms, inside the molecules of bodies.

It seems to me that any new theory involving the rejection of the atomic theory certainly ought to begin with organic chemistry as a starting point.

Another striking result of this successful investigation into the composition of the molecules, upon the history of chemistry in the last thirty years, must be noticed. It early became possible to assign to students a branch of research with almost absolute certainty of result. The effect of this was to attract thousands of

students to chemistry in every country where a university degree or university position depended in any way upon a successful research—notably, of course, in Germany. The increased number of students demanded increased accommodation for their work, and increased respect by the Government and University authorities for the science, with a corresponding effect upon the progress of the science.

The large demand thus created for chemical apparatus and for fine chemicals was met by the rapid growth of manufactories for the purpose.

The attention of these manufacturers, no doubt, in most cases, themselves trained in the University laboratories, being centred upon chemistry led to the general enlargement of their chemical business. To such an extent has this process continued in Germany that to-day the annual production of chemical products is valued at upwards of $160,000,000. The works give employment to 114,600 workmen, with a pay-sheet just under $25,000,000, and to about 4,000 technical chemists to direct them.

No change is more striking to a chemist who remembers the condition of chemical laboratories thirty years ago than the facility with which one can procure the rarest chemical and the most complicated apparatus to-day as contrasted with his experiences then. One wanted, for example, Penta chloride of phosphorus for some research. It is now made by the ton, and kept for sale by hundreds of firms, whereas thirty years ago it was prepared by the investigator with pains and difficulty, and by the ounce.

The same is true of the glass industry. The glass blowers of to-day are not only incomparably more skilful, but for one firm making any apparatus of blown glass then, there are hundreds to-day. Cheap and accurate thermometers and barometers afford abundant evidence of this. I have seen them sent about as advertisements in this town.

Indeed, the growth of the industries devoted directly and indirectly to the supply of the chemical laboratory in the last thirty-five years may be aptly compared to the corresponding growth of the electrical industry and more recently, to that of the bicycle manufactories. I had a curious illustration last year of the widespread nature of the change which has been caused in England by the bicycle. I can just remember the old coaching inns—the last of which had just fallen into decay in my boyhood. I had occasion last year to travel about England a good deal, and was

much astonished to find wherever I went that the old coaching inns had taken a new lease of life as flourishing bicycle inns. Certainly not less widespread has been the change brought about by the successful application of the theory of the constitution of chemical compounds.

The most recent departure from the old-established lines of chemical work has arisen from the investigation of the border-land between physics and chemistry, such, for example, as the laws of solution, but up to date without any very important results. We have a new theory of solution, not by any means universally accepted as yet, which, however, has, so far, proved of extraordinary fertility as a basis of student research, and which has consequently attracted a considerable number of adherents in Germany.

You will notice how much I have spoken of Germany in these remarks, indeed, I think that the main progress of chemical science in the last thirty years is more due to German university methods and to German industry in research than to the influence of all the other nations put together, and if I had to correct the well known passage with which Wurtz began his history of chemical theory years ago—"Chemistry is a French science. It was founded by Lavoisier of immortal memory"—I think I should write of to-day, at all events, that chemistry is a German science, founded and maintained by the University methods of giving degrees in Germany.

Holding this view, it is with no little regret that I see a strong section of the technical chemists of Germany has been urging the German Government to establish an official examination system not unlike our own university and school system here. They want chemists to be ear-marked with a Government stamp of uniformity. They seem to think an examination will secure that all the successful chemists, who pass, will know all the subsidiary branches of knowledge required in the progress of chemical technology. They are to be mathematicians and engineers, able to make the necessary drawings and specifications for new works, familiar with the methods in use elsewhere, and so on.

Not unlike our own system here; we want evidence of knowledge in mathematics, French, German, Latin, English, physics, logic, biology, chemistry, geology, and a lot of other subjects which I have doubtless forgotten; and then we give a degree, and tell the successful student—"Go out in the world and teach or practise—your

education is complete," whereas in reality we ought to say—"Now you can begin to learn. We have given you the means of learning—now go and learn before you dream of thinking yourself fit to teach or practise. You are not a chemist, or biologist, or geologist, as the case may be, but you may make yourself any of these if you will only learn."

Indeed, after thirty-one years of uninterrupted university life, divided between English, Austrian, German and Canadian universities, I do not hesitate to express my opinion that the examination system of the English-speaking universities is an unmixed evil—doing harm alike to the universities and to the commerce of our country. I have seen the loss of the chemical trade, at one time almost exclusively English, and to-day practically German, and I believe the loss to be due to the pernicious system of education in our universities. Various reasons have been alleged to explain the loss and various remedies suggested, the latest of which is the establishment of Government technical schools for workmen, though how that is to help I fail to see. It is the Technical School for the manufacturer which is wanted.

Perhaps, however, the Germans are themselves going to supply the real remedy—if they adopt the examination system of which I have spoken, though it will be a slow process. It is hard to divert trade from established channels, and it will take a very long time for even the examination evil to work material harm to German commerce.

I do not mean to say that one cannot pick out the best men by an examination system. I think any system will accomplish that. I mean that the evil which is ever present, is that the student has his attention concentrated throughout his studies upon the examination and upon nothing else. The teacher cannot teach outside the narrow rut fixed by the conventional rules of the examination. And the examiner is similarly limited. The more universal an examination is made the more is this true—and the evil reaches a climax when it becomes a semi-national examination such as the German chemists are asking for, and such as we have to a less extent in our schools and universities here.

PLANTS AND THEIR ENVIRONMENT.

W. T. McCLEMENT, M.A.

Armour Institute of Technology, Chicago.

There can be little doubt that the first botanist was the first man. His interest in plants was largely gastronomic; but in his discussions with his offspring, and with the other fauna of his neighborhood, he was fortunate if he had a weapon with many spiral ducts in its vascular bundles. When botanical knowledge had been enriched by the decease of those who ate "not wisely but too well" of the wrong plant, we find that a few species were set aside as useful, wholesome, and to be encouraged, while the great majority were considered with a view to their effect on ailing friends or too vigorous enemies. Later came the laudable attempt to classify all sorts, and in connection with this object we find the collecting mania to have developed, until for many years one aim of the botanists seems to have been to reduce to the condition of more or less libellous mummies a large number of specimens of every plant beneath the sun. Then the increased perfection of the microscope gave the laboratory botanist his opportunity, and for the last twenty years we have been trying to get at the true inwardness of every part of every kind of plant. The life processes are also being investigated in the physiological laboratories of all well-equipped colleges, so that we may hope soon to know the conditions best fitted for the well-being of the manufacturers of our food supply. In connection with this branch of botany there is yet much to be done by all of us who are so fortunute as to have taste and opportunity for walks afield.

We may with profit ask from ourselves and our students the following questions: "What are the characteristic plants of each well-defined plant society,—of the shore, of the marsh, of the swamp, of the meadow, of the forest, of the rocky ridge, of the sand-dune?" "What are the conditions to be met and conquered in each environment?" "What peculiarities in structure or habit have placed each plant in one of the above societies?" These are but leaders of an army of questions that suggest themselves, and we may have no fear that our answers will exhaust the subject.

All that we can undertake is to study the characteristic plants of an area with respect to their adaptations. These adaptations are: for and against light; for protection; for reproduction; in connection with the chief factors of environment, which are light, heat, water, soil, wind, animals, other plants, and topography or drainage.

We shall refer to the plants forming the marsh and swamp society as hydrophytes; the society of medium or meadow conditions, mesophytes; the dry sand-dune or rocky desert group, xerophytes; and the forest plants, hylophytes.

If we visit a small body of open water with a muddy bottom, we shall find—first, submerged rooting plants,—typical aquatics—for example, ceratophyllum, myriophyllum, ranunculus aquatilis, bidens beckii, elodea, etc. The conditions which threaten their existence are: small exposure to light and carbon dioxide, and great liability to destruction from the motion of the water in waves or currents.

The dissection of the leaves into cylindrical threads offers the greatest surface possible for exposure to the weak light penetrating the water, and for the absorption of gaseous food. In connection with the flexible, buoyant stems, such leaves also present the condition least likely to offer resistance to water movements. Next are the floating plants, spirogyra, cladophora, spirodela, etc. Like the rooted plants, these offer little resistance to the movements of the water, and by their thinness afford all parts sufficient light exposure.

Thirdly, we find rooted weeds partly above and partly under water. They may include the potamogetons, valisneria, scirpus, typha, sagittaria, heteranthera, etc. The submerged leaves of these are the small, or dissected, or very thin types above noted, while the floating leaves are broad and entire. The latter serve to support the blossom for insect pollination.

There is a remarkable tendency among plants partly submerged to modify the vegetative organs into broad, entire, floating structure, or into narrow, cylindrical, erect leaves, or leaf-stems. Sagittaria grows on land or in shallow water, with the leaves completely emerging. These leaves are broad and halberd-shaped, but when growing in deep water, with leaves largely submerged, they are narrow, and a perfect gradation exists—coinciding with the extent of leaf emergence—between this cylindrical petiole-like structure and the widely expanded leaf.

No one can have looked long at a large growth of water plants without having been impressed with their erectness and narrowness. Scirpus, typha, iris, wild rice, and sweet flag are all characterized by this habit. And it persists throughout that most successful and useful family—the grasses. Scirpus occupies a place in two plant societies, the wettest and the dryest—ponds and sand-dunes. Has the habit of growth anything to do with this strange distribution? All these erect plants above mentioned are of social growth, reproducing vegetatively, and a good light supply is best secured in crowded clusters, by narrowness and erectness of the members. But protection from extreme heat and light are often required by this style of plant. The cylinder is the plant form which, next to the sphere, gives greatest mass with least surface for evaporation. The same result is obtained by the grasses which possess to a marked degree the power of reducing their surface in time of great heat by rolling their leaves into cylinders. Again, the conditions surrounding a plant rising above the surface of water are not unlike those endured by the plants of the sand-dune. From direct and reflected light and heat, and from the sweeping of the wind, the transpiration in such a position must be excessive, hence thick epidermis and cylindrical shape may best serve both locations. This same wind-force may have also to some extent fashioned the narrow ribbon-like foliage.

The zonal arrangement of the plants in and on the margin of ponds is noteworthy. In the deeper water we have nymphæa and nuphar, then a circle of S. lacustris; next S. pungens: next typha and pontederia. A pond of stagnant water will show many of the same characteristics, with the addition of many more floating plants here, because of the protection from water currents and strong winds. Although true aquatics, they must *float* in stagnant water, from the lack of oxygen which is more readily absorbed by moving water. The charas, however, remain at the bottom. Are they able to do with little oxygen, and why? We should also note the great plasticity that is shown in the fact of many of the above plants developing entire leaves above water, and dissected leaves below. This is decided just at the time of leaf development, and depends, not on heredity, but on the temporary depth of the water.

The aid of the microscope is essential to the study of many of the adaptations, and we find that external conditions produce deep-seated changes. The thin-walled epidermis of submerged plants,

lacking stomata but allowing absorption through all the parts, will be accompanied by corresponding reduction in vascular tissue and in root development. Support by the water will result in small mechanical tissue, and often in the development of air cavities. The reduced light results in a comparatively feeble development of green tissue. These hydrophytes are the most cosmopolitan of plants, being many in numbers but of few families and practically the same on all the different continents. Monocotyledons predominate among them. The engler-prantl classification places pandanus, typha and sparganium in the lowest class of monocots. Next come the pondweeds—alisma, etc.; and in the third group, the grasses and sedges. We cannot avoid the decision that our hydrophytes are largely made up of the lowest classes of monocotyledons. Geology shows that the primitive plant conditions were decidedly hydrophytic. Possibly we are here studying persisting types of the first families, whose more progressive members—the grasses, lilies, and orchids—have climbed out and become somewhat mesophytic.

A study of the same hydrophytic district year after year will show us that a slow migration is going on among the reedlike hydrophytes. Their body habit is such that they must root firmly in uncertain soil, so we find secondary roots sent out in great numbers. Their erect, wandlike forms allow close social growth, so the clusters rise from a mat of interlaced roots. Upon these dead and decaying roots new plants spring up, and here among the reeds and sedges we find the great turf-builders. The roots hold the silt from the land and thus produce a soil in which true hydrophytes will not flourish, but which is peculiarly suitable to what may be called hydromesophytes, producing a swamp-meadow of cat-tails, sedges, spikerush, cutgrass, barnyard grass, water crowfoot, smartweeds, nasturtium, etc. By these the shore line is gradually pushed forward, and shallow lakes and ponds become swamp-meadows, and, in time, swamp thickets and even forests. The swamp-meadow plants are vegetable amphibians, from the fact that in the dry season their relationship to water is very greatly changed. Among them we may well look for plastic forms and wonderful adaptations.

Of mossy swamp-moors we have that very characteristic form known as sphagnum bog. Why are great extents covered by this moss, often with scattered tamaracks and black spruce, but with a class of plants altogether different from those of the ordinary swamp-meadow? The cotton-grass on the margin, the orchids,

the catchflies and the ericads make a group well known and beloved by all field botanists. But why do these plants always occur together, and why, with apparently similar water content, does this soil exclude the ordinary swamp flora? Probably because of the lack of drainage. The peaty soil is extremely poor in potash salts and nitrates. No nitrifying bacteria are found, and practically none of the bacteria of decay. The peat is antiseptic, and animal and plant forms are here embalmed. The supply of nitrogen must be obtained by other than ordinary means, and as a result this is the home of many of the carnivorous plants. The heaths and orchids are largely saprophytic, and many of the remainder are nourished by mycorrhiza. These plants, while standing in either visible or invisible water, are subject to xerophytic conditions in so far as aerial parts are concerned, with the usual result of narrow, thickened leaves, dense epidermis, and hairy, scaly or woolly protection. But our explanations do not explain. Why are these, rather than others, the plants for these conditions, and have we considered all the important features of their environment? The question is with you.

Let us now leave conditions of excessive moisture, and consider a forest growing in a river valley. Here are the optimum conditions of plenty of humus, sufficiency of water and protection, and good drainage. As a result we find the climax of our flora—the giant expression of the plants which we see elsewhere under different conditions. The only disadvantage is lack of light to encourage a luxuriant undergrowth. This undergrowth is absent, as far as perennials are concerned, except the lianas. Rhus toxicodendron here becomes a very vigorous climber, as do vitis and smilax, often reaching fifty feet from the soil in their efforts to get light. Herbs to succeed here must rise quickly from tubers, corms or bulbs, and complete most of their vegetative work before the trees reach full leafage. The trees themselves develop large leaves in order to bring all possible chlorophyll to the best position for light.

Leaving the forest shades we find a new army of plants ready for inspection on the level prairie. Typical forms are Silphium integrifolium and S. terebinthinaceum, Helianthus hirsutus and H. occidentalis, Parthenium integrifolium, Solidago speciosa, S. arguta and S. rigida, Amorpha canescens, Lespedeza capitata, Petalostemon candidus and violaceus, Euphorbia corollata, Aster multiflorus, Rosa blanda, Acerates longifolium, the grasses Andropogon, Panicum virgatum, Poa compressus and P. pratensis, Allium

cernuum, Salix humilis and S. tristis, Tradescantia Virginica, Cycloloma platyphyllum, and hundreds of others at other seasons.

The ecological conditions to be met by the prairie flora are:

1. Absence of trees and shade.
2. Dryness of soil from scanty rainfall.
3. Small quantity of humus.
4. Strong winds.
5. Strong sunlight.
6. Extremes of heat and cold.

To meet these conditions we find that the above-mentioned plants have developed various characteristics. Silphium, Helianthus, Parthenium, Solidago and Aster are protected by strong, coarse texture and thick epidermis, and have very adequate means of seed dispersion by wind. The Leguminosæ are very pubescent, and possess a remarkable power of leaf movement, which characteristics have doubtless much influence in making this family one of the most successful in all conditions throughout the world.

How does the latex of Acerates and Euphorbia enable these plants—with thin epidermis and no pubescence—to resist the tendency to excessive transpiration? The narrow, erect leaves of the grasses, cuticularized and curling, have been mentioned before.

The long debated question—the reason for absence of trees on prairies—still calls for investigation. Probably a forest is the last society of plants to appear on a piece of soil. The absence of trees may then be both a cause and a result. If a region be so open and exposed as to afford a great sweep to drying winds, trees could scarcely get started, and if they did so would be destroyed by the annual fires.

An extremely interesting study of rapid adaptation to changing conditions may be found by visiting the sand-dunes, such as occur in Prince Edward County, and along the east shore of Lake Huron in Lambton and Huron counties. Dunes are always caused by the prevailing wind sweeping over water or level land. The sand is usually picked up from the beach, having been separated from the soil by the action of water. As the wind sweeps inland loaded with sand, it loses its energy and velocity and drops the burden. Obstacles, such as plants or rocks, may cause the sand to drop at first, then the pile of sand itself becomes an obstacle, and the dune grows and advances. It becomes a moving body of sand—not moving in mass but with a surface flow. The side of the dune facing the prevailing wind has a gentle slope up which the sand is

urged. The advancing side, or lee side, is a slope as steep as sand will lie—between thirty and thirty-five degrees.

Approaching the dunes from the water side, we note first the submerged plants anchored to rocks—Cladophora, Draparnaldia, Ulothrix, etc. Just above the edge of the water is a zone entirely devoid of plant life. The conditions are too severe for even the most hardy vegetable adventurers. Alternate submergence and emergence, buffetings by wind and wave, exposure to extremes of light and heat and cold—all these conditions combined have blighted the hopes of the many waifs—spores or buds or seeds—constantly cast up by the waves. Occasionally, in favorable weather, an alga may grow luxuriously for several days, but by the next storm this playground of the waves is purged of all such interlopers.

Just beyond the reach of summer storms we find Cakile Americana, which is everywhere the first to root in the beach sand. Closely associated with it are Corispermum hyssopifolium, Euphorbia polygonifolia, Cycloloma platyphyllum, Cnicus pitcheri, and the Russian thistle just coming in. No biennial or perennial can survive the winter storms which reach this zone, but we shall find them constantly venturing upon it in the forms of Artemesia Canadensis, Equisetum hyemale, Prunus pumila and cottonwood seedlings.

Beyond this we reach the ground upon which dunes grow, and we find them of all sizes, from a few inches in height and length to those stretching inland for miles and reaching sixty to eighty feet at the crest.

To present a persistent obstacle to moving sand, survive the successive layers which will sweep over it, and hold together the sand, a plant must have the following peculiarities:

1. Rapid growth.

2. Social growth. No single plant—without vegetative reproduction—could successfully form a dune.

3. It must be adapted to xerophytic conditions, heat, cold, dryness and high winds.

4. It must be of indefinite growth upward, with any part of the stem able to put out root hairs, and function as a root, and any part of the root able to do duty as a stem.

The following plants seem best adapted to the above conditions:

1. Ammophila arundinaceæ — perhaps the best of all dune flowers, and used by the Danish Government for this purpose.

2. Calamagrostis longifolia and Elymus mollis. There seems to be a limit beyond which these grasses cannot obtain the necessary moisture; then they die, and the dune travels.

3. Prunus pumila. The sand cherry is able to hold dunes to the height of fifteen to twenty feet.

4. Salix glaucophylla, and Salix adenophylla. The former must be considered very elastic, and it is often a swamp plant. Its roots are sometimes seen extending from twenty to forty feet on the eroded surface of tha dune, and whenever buried will send up leaves.

5. Populus monilifera. The cottonwood survives in surprising situations, *e.g.*, with thirty feet or more of trunk and branches submerged in sand, and yet healthy and growing, and with ten feet of the roots laid bare, and still the tree seemed to thrive.

Being slow growers, the pines can scarcely act as dune-formers, but if planted and established, they might be able to hold dunes in place better than any of the above-mentioned plants. Pines have great power of withstanding trying conditions. Their continuous coat of strongly protected leaves permits them to begin chlorophyll work as soon as the growing season begins, and to continue it in spite of late frosts. Their needle shape, sunken stomata, and very thick epidermis afford the pine leaves protection also from strong and drying winds.

Even the moving surface of the dune is not so arid or uncertain as to discourage all plants. Corispermum hyssopifolium or bugseed is found scattered plentifully over many parts. The seeds of this annual are very light, and can germinate in about thirty hours. If, in the spring, these seeds are allowed favorable conditions for the short time necessary to get their cotyledons above the sand the plant can defy later storms.

In connection with ordinary adaptations to circumstances we mentally allow the plants ages in which to produce the modifications. At the foot of the advancing slope the change must take place almost before our eyes. If a plant in the path of the sand can make the necessary changes within one season, it may survive, otherwise it is doomed. When a dune advances on a swamp, we find, of course, that the great majority of the plants die out at once. As the sand surrounds them they become a paler green, showing the difficulty with which they do their chlorophyll work. They also seem to blossom most profussely, as if in a despairing attempt to provide for a continuation of the species. The buttonbush manages

to endure the dune conditions a few years, as also do the red osier and wild grape. As before mentioned, Salix glaucophylla and adenophylla take kindly to the dunes. We find that the leaves of the plants are smaller, thicker, and much firmer on the dunes than when growing in swamps. All the other plants die and are buried.

On the fixed dunes we notice that the pines succeed the cottonwoods. The latter require mesophytic conditions for germination, but when well started, can endure the dune conditions. They are, however, short-lived, and on the older dunes we find them replaced by pines which germinate in their protection. As the conditions of the older dunes become more mesophytic, the pines are replaced by oaks. When in favorable condition the oaks can crowd out the pines, owing to their more rapid germination, better spreading power, and less danger of extermination by fire. Within a certain range of conditions the oak is the stronger, but its range is not nearly that of the pine.

Nothing has been said with regard to the mesophytic flora except as it is modified for prairie conditions. From our point of view the mesophytic is the normal flora, and as such will not present modification. Whether this is the correct point of view is a debatable question.

Many other ecological questions of great importance, such as the color problem connected with flowers, veins, budscales, spring leaves and autumn leaves, still await scientific observation. Such a paper as this can merely suggest a few points of attack.

CLASSICAL SECTION.

THE GREEK AORIST.

A. J. Bell, M.A., Ph.D., Toronto.

The aorist has been termed the Proteus of tenses; not ineptly, whether we regard its forms or the meanings which it can and does express. With regard to form we have two classes of aorists: the first, or weak, and the second, or strong; the first being the sigmatic aorist ending in α, though all sigmatic aorists do not end in α (witness $\ddot{\varepsilon}\pi\varepsilon\sigma o\nu$), and we have aorists ending in α that are not sigmatic and to all appearance never were, *e.g.*, $\ddot{\varepsilon}\delta\omega\kappa\alpha$, $\varepsilon\tilde{\imath}\pi\alpha$, $\ddot{\varepsilon}\chi\varepsilon\upsilon\alpha$. The first important contribution to the investigation of this tense was made by Philip Buttmann, who, in his Ausührliche Griechische Grammatik, stated with such cogency his reasons for believing that the second aorist was the older and simpler form, and that the first aorist was a later formation, developed from the present, that the point has not since been disputed. But his further conclusion that this second, or strong aorist, is the oldest form of the finite verb, being based on evidence which Buttmann, at that early stage of inquiry into sounds and forms, could not be expected to interpret rightly, has not met with such general acceptance. It is the evidence for this view that I wish to examine now, in view of the results won from our further study of forms and syntax.

In the examination of a grammatical form three things must be kept in view: (1) The meaning, or meanings, expressed by the form; (2) the nature of the form itself; (3) the information, if any, given about it by the people who used it and knew it in its living force. It is because Delbrück, for example, gives so little heed to the nature of grammatical forms, concentrating his attention, as he has done in all his works, on the meanings that the form is capable of expressing, that the scattered hints that Brugmann gives us occasionally in the course of his Theory of Sounds and Forms seem so much more luminous for syntax than the learning accumulated in the two bulky volumes of Comparative Syntax that Delbrück has given us. I have placed the meaning first, not because I regard it as of more value than the form as a guide to the original force of a grammatical inflexion, but because the evidence it gives seems, at first sight, so much clearer and easier to grasp. Whether it is

really so we shall have some opportunity of seeing as we deal with this question.

What, then, is the meaning of the Greek aorist?—or, to be more precise, what is the time denoted by this tense? The answer at first seems obvious enough. It is a past tense; according to Dionysius Thrax, one of the four varieties or διαφοραί of the χρόνος παρεληλυθώς, which are the παρατατικός, the παρακείμενος, the ὑπερσυντελικός and the ἀόριστος; and while our modern grammars do not follow him in regarding the χρόνος παρακείμενος as a past tense, they all give the aorist a place among the historical tenses or preterites. But it is noteworthy that this tense alone of the historical tenses has forms for all the moods; that we find an aorist subjunctive, an aorist optative, as well as an aorist indicative. Is the aorist subjunctive a past tense? "No," answers Apollonius Dyscolus, in the first syntax produced in the Western world, "for the time relation belonging to the indicative disappears as soon as we change the indicative to another mood." This is the reason, of course, why the augment, a mark of absolute past time, is attached to the indicative only. In the other moods, Apollonius thinks the aorist expresses συντέλεια or ἄνυσις as opposed to the παράτασις of the present. But the force of completion appears to belong rather to the perfect in classic Greek, and the meaning of the aorist is often rather inceptive or ingressive. But I don't wish to dwell on this; the fact to which I wish to call your attention is that the aorist alone of historical tenses has forms for all moods, which, it is admitted by all, never denote past time in the subjunctive, and denote past time in the optative only after verbs of declaring, *i.e.*, in indirect discourse,—a secondary use of the optative. Dionysius speaks of the perfect as one of the varieties of the past, *i.e.*, as a preterite or historical tense, and it has forms for all the moods. But we know that primarily the perfect was not a preterite but a completed present, as, *e.g.*, κέκτημαι or μέμνημαι, or οἶδα; that its use as a preterite belongs to later Greek; and that it is as a completed present that it developes these forms for the subjunctive and optative. Might it not be logical to suppose that the aorist, too, was not primarily a past tense, and that it was not as a past tense that it developed these modal forms?

But what meanings does the aorist express in the indicative? It denotes the simple occurrence of an act in past time, as in νὺξ ἐγένετο, as opposed to the imperfect in νὸξ ἐγίγνετο. Buttmann says the aorist leaves the present out of view, transports us to the past and relates in succession the events that occurred there. But Apollonius Dyscolus tells us that the aorist with πάλαι is rather a pluperfect; "for," he adds, "the aorist embraces the preteritive meanings of the perfect and the pluperfect, just as among nouns there are those to which the masculine

and the feminine gender is common." Is, then, the aorist used for the pluperfect? It is certainly used as an equivalent for the Latin pluperfect. *Hoc scripseras, ubiamicus advenit*, is in Greek, *Τοῦτο ἔγραψα, ὅτε ἦλθεν ὁ φίλος*. So in Thucy. II. 92, *ἐτράποντο ἐς τὸν πάνορμον, ὅθενπερ ἀνηγάγοντο*, and we translate the aorist here by the English pluperfect. Farrar says, "Never translate the aorist by *have*;" but Thompson owns that we at times use a perfect where the Greeks use an aorist, and refers to Soph. Aj. 586, *ἐπῄνεσ' ἔργον καὶ πρόνοιαν ἣν ἔθου*, "I praise thy deed and the foresight thou hast shown." But in classic Greek the perfect and pluperfect are not tenses in the proper sense of the term, but rather modes of action, being presents and imperfects of completed action; and it is the preteritive meanings which these tenses assume later that Apollonius has in view. Still such a use of the aorist as is found in Matt. iii. 17, *οὗτός ἐστιν υἱός μου ὁ ἀγαπητὸς, ἐν ᾧ εὐδόκησα*, resembles the Greek perfect in its primary sense very closely. It is not used, to my knowledge, in the primary sense of the imperfect; even in case of verbs that imply duration; its force is inceptive, *e. g.*, *ἐνόσησα*, "I fell ill," *ἐσίγησα*, "I became silent."

These are varieties in its use as a preterite; but it does not always designate past time. At times we have to translate it by a present: So in *ἐπῄνεσ' ἔργον καὶ πρόνοιαν ἣν ἔθου*. And in Aj. 682, *ἔφριξ' ἔρωτι περιχαρὴς δ' ἀνεπτόμαν*, which are instantaneous, or, as some grammarians call them, emphatic presents. Then in Il. 16, 482, *ἤριπε δ' ὡς ὅτε τις δρῦς ἤριπεν ἢ ἀχερωϊς* ("And he fell as falls an oak or a silver poplar."—*Lang*). And in Il. 17, 173, *νῦν δέ σευ ὠγοσάμην πάγχυ φρένας* ("But now think I altogether scorn of thy wisdom."—*Lang*). Brugmann translates *ὠτοσαμην* as a present perfect here ("*bin ich Tadler geworden*"), and adds, "This use is found in Slavic and Vedic (being extremely frequent in the latter), and must be regarded as belonging to the primitive Indo-Germanic. In Il. 9, 320, *κάτθαν' ὁμῶς ὅτ' ἀεργὸς ἀνὴρ ὅ τε πολλὰ ἐοργώς* ("Death cometh alike to the untoiling and to him that hath toiled long."—*Lang*) we have a gnomic aorist, as in *πολλὰ παρὰ γνώμην ἔπεσεν*. But the aorist does not here denote past time, it rather denotes what is true at any time, whether past, present or future. And the aorist is used for the future, not merely in the infinitive as in *μέλλω ποιῆσαι*, a very frequent use, but in the indicative. Brugmann notes, Il. 4, 160,

εἴπερ γάρ τε καὶ αὐτικ' ὀλύμπιος οὐκ ἐτέλεσσεν
ἔκ δε καὶ ὀψὲ τελεῖ, σύν τε μεγαλῳ ἀπέτισαν;

and Il. 9, 412:

εἰμέν κ' αὖθι μένων Τρώων πόλιν ἀμφι μάχωμαι
ὥλετο μέν μοι νόστος, ἀτὰρ κλέος ἄφθιτον ἔσται;

and conjectures that these future uses are to be connected with the unaugmented or injunctive forms of the aorist stem. The aorist, then, is used to express an act taking place in the past, present or future; or what is true at any time, whether past, present or future. It is also used to express an act never accomplished in either past, present or future. So *e.g.*, in Eurip. Ion., 1291, *ἔκτεινα δ' ὄντα πολέμιον δόμοις ἐμοῖς*, or Xenophon, Anab., II., 6, 4, *ἐκ τούτου καὶ ἐθανατώθη ὑπὸ τῶν ἐν Σπάρτῃ τελῶν ὡς ἀπειθῶν*. Sophocles plays on this use of the aorist in Ajax, 1126-7:

Μεν. δίκαια γὰρ τόν εὐτυχεῖν ἀτείναντάμε;
Τευ. κτείναντα; δεινόν γ' εἶπας, εἰ καὶ ζῇς θανών.

These uses, thinks Brugmann, are not inceptive, but are to be explained from this, that the verbs in question give merely the action of the subject, not the result or effect on the object. But this seems merely a special case of the inceptive or ingressive use of the aorist. Now, are we to suppose, as one might if he judged simply from the Englishman's standpoint, that the Greek aorist had the force of the pluperfect, or the perfect, or the imperfect, or a simple past, or a present, or a future? Absurd! An examination of the form of this tense will, I think, show that these uses can be reduced to three, a primitive use, and two others easily derived from it.

What of the form of the so-called second, or strong aorist? Compare *ἔστην* with *ἔστησα*, or with *βουλεύσαιμι*. It shows augment, root, personal ending. But the augment is originally an independent word, probably a locative of the pronominal stem *o*, the stem of the Latin pronoun *is*, and means *there* or *then*, *in that place* or *at that time*. That it is not an essential part of the strong aorist is clear from its frequent omission in Homer. If we leave it out of account, we have merely the root and the personal ending, but nothing whatever to indicate tense.

What of the name given by the Greeks to this tense?—the *χρόνος ἀόριστος*, or indefinite tense. Dionysius and Apollonius understand it of an indefinite past; but there is nothing in the name to limit its meaning in this way. This tense, then, the Greeks called the indefinite tense. There is in its form no mark, such as we find in other tenses, to indicate time, and it may be used to denote acts that have occurred in present, past, or future time, or that are likely to so occur, or that were merely planned but never accomplished. The one limitation to its meaning seems to be that it never denotes duration, and perhaps this must be qualified, for Brugmann thinks that the form *τίθης*, the second sing. pres. indic. of *τίθημι*, is an unaugmented aorist or injunctive form. The present should have been *τίθησι cf. ἔσμι, ἔσσι*.

What, then, was this tense originally? "We must assume for the Greek verb," says Buttmann, "an older period, when a definite and dis-

tinct present did not yet exist" (*i.e.*, behind the tenses of verbs there was a tenseless or a timeless form from which they developed). "There was only one form for the relation of what had happened, was happening, or was about to happen—an aorist—a timeless form. This form was the strong aorist, the primary form of the Greek verb, from which all tenses and moods were developed." For moods, Brugmann recognizes the existence of such forms, and calls them injunctives. They are used as indicatives, present or past, as voluntative subjunctives, as imperatives, and as futures. They are unaugmented aorists, he says, and he takes as an example of them the Sanskrit *bharat* = φερε(τ). He does not think of these injunctives as constituting a separate mood, but as the oldest forms of the finite verb, representing a stage in its development when the moods had as yet found no separate and distinct means of expression.

But while Brugmann gives the unaugmented strong aorist this place for moods, he holds an entirely different opinion with regard to tenses; for he does not hold with Goodwin that the subjunctive and optative are merely developed futures, nor does he see the force of the indicative ending In his Greek Syntax he says, "The present indicative is in itself timeless, and denotes originally no definite period of time. Hence in Greek, as in the original Indo-Germanic, it was used alike for the present, the past (as Hist. Pres.) and the future, *i.e.*, for all times alike." I have two objections to make to this statement: (1) It will be difficult to prove that in the original Indo-Germanic the present was used for present, past, and future time. It is true that the use of the Hist. Present in the Vedas is common. It is used in later Greek, where the use seems developed by orators, and intended for the vivid presentation of past events, so that perhaps it should be called a Rhetorical rather than an Historical Present. But the Historical Present is not found in the Homeric poems. Brugmann is frank, as usual, in stating the embarrassment this gives him. He finds its lack in Homer difficult to account for. "It can hardly be due," he says, "to the character of the epic diction." The use of the present in relating past occurrences is so natural that it may well be thought to have developed independently in Vedic, Greek and Latin—early in Vedic and perhaps in Latin, later in Greek and hardly as an Historical Present in the proper sense of the term. Its absence in Homer seems to me a good reason for not asserting its presence in the original Indo-Germanic. (2) But my second objection to his statement is, if well grounded, fatal to his theory. The pres. indic. is not timeless in its form; it has in its ending a mark of the present time. How does the form of the present differ from that of the unaugmented aorist?—*bharati* from *bharat*. The original endings for the present seem to have been *mi*, *si*, *ti*, *men* or *mes*, *te*, *nti*;

for the aorist, *m*, *s*, *t*, *men* or *mes*, *te*, *nt*. Where they differ, the difference consists in the addition of *i* to the aorist to form the present. What is the force of this *i*? Fick did not hesitate in his lectures to identify it with the *i* in *Romai*. "It means *here*," he said. "While *bharat* means '*bearing he*,' *bharati* means '*bearing he here*,' i.e., '*he bears*,' and '*he is now bearing*.'" And by the addition of this suffix to the unaugmented aorist, the old pretemporal, timeless form, we get the first tense in the proper sense of the term, the present tense. This formation determined the later character of the aorist, the indefinite preterite. If we leave out of account, for the moment, the unreal use of the aorist, which I think a special case of its inceptive use, all the other uses of the Greek aorist that I have quoted fall naturally into two classes. There are: (1) Its comparatively rare uses as a present and future and, the gnomic aorist, which belong to the old indefinite or timeless tense. The characteristic of all of them is the ignoring of the idea of time, *e.g.*, ὡς τις δρῦς ἤριπεν (Any fall of an oak, no matter when, will serve as an example to illustrate his fall). (2) Then there are the ordinary uses of the aorist as an indefinite preterite, the use left to it after the formation of the present. What took place when the present was developed? Let this line past, pres., fut., represent the province of the old timeless aorist. When the present was developed it was divided thus, past, | pres., fut., the present and future falling to the new tense. That the future was once represented by the present seems to me probable, and the use of the present εἶμι = *ibo*, for the future as well as the present seems a remnant of this use.

A word here about the inceptive force of the aorist. Besides the tenses of the verb denoting absolute time (the past, present and future), and those denoting relative time (the pluperfect and future perfect), we have two which denote the mode as well as the time of the act, the imperfect and perfect. For most acts, as regards their time, can be thought of in three modes; they are beginning, in progress, or completed. With the formation of the present the mode of duration was appropriated for it, and presently that of completion was taken for the perfect, leaving the mode of inception for the aorist. Interesting here may be the one remark Dionysius Thrax adds to his enumeration of the tenses. "Of the six," he says, "we have three συγγέναιαι or related pairs—the present and imperfect, the perfect and pluperfect, and aorist and future." In the last pairing he evidently has in view the inceptive force of the aorist, which Krüger and Curtius (I think) believed to be a special and primary force. (Ed. Uhlig, p. 53.)

But, it will be objected, you say that all parts of the finite verb are developed directly or indirectly from the strong aorist. How can this be true when such a verb as εἶναι, to be, a verb of some importance and

antiquity, has no aorist? To the question of the relation between the imperfect and the aorist a good deal of attention has been given since Lobeck first essayed its solution. "ἔστη is like ἔφη in formation," said Lobeck; "ἔφη is the imperfect of φημί; therefore ἔστη must have been originally the imperfect of an older στημι, and ἵστημι is a later reduplicated form of the present." Delbrück, in support of this, cites from the Vedas the forms *pati* for *pibati*, and *dhati* for *didhati*, *i.e.*, θησι for τίθησι, or θημι for τίθημι; and Brugmann says, "The distinction between the present and the strong aorist was merely syntactic, not formal. Forms of the same class were used, now in a present, now in an aorist sense, *e.g.*, ἔφην, ἔγραφον, ἔγεμον, ἐνιπτόμην are imperfects, but ἔστην, ἔτραπον, ἔβλαστον, ἐγένομην are aorists, though they are homogeneous forms." Brugmann, you see, accepts Lobeck's conjecture, supported as it is by Delbrück, that ἔφν and ἔστην were to begin with the same tense. This seems to me probable, especially as ἔφην is so often used as an aorist. But if ἔφην is aorist as well as imperfect, what of ἦν, I was? It is surely about as often aorist as imperfect. The verb εἶναι, once significant and transitive, has been reduced to a substantive verb or copula, the meaning of which is such that it does not need several forms to express its past, which presents in itself no varieties of meaning. And with regard to form, ἦν ought to be called a second, or strong aorist. But no doubt some of these strong aorists have, as Brugmann believes, become imperfects. In some verbs the present has the same form of the roots as had the original aorist, *e.g.*, ἐσμι φημί φέρω; but the form of the root was usually changed in the present, by gradation, as in λείπω (aor. ἔλιπον) or by expansion as in λαμβάνω (aor. ἔλαβον). When the form of the root was thus changed, a new tense was formed from it to express for the past what the present tense expressed for the present, viz., an action then in progress, *e.g.*, ἔλειπον and ἐλάμβανον, and ἔλιπον and ἔλαβον remained aorists. But when the strong aorist stem remained unchanged in the present, the old strong aorists became imperfects, *e.g.*, ἦν, ἔφην, ἔφερον. The stem ἐς developed no new aorist in Greek (in Latin it borrowed the future perfect: I have become); φημί formed a first aorist εἶπα, φέρω borrowed the aorist ἔγεγκα. That some imperfects were originally aorists, as both Brugmann and Delbrück suppose, is rendered still more probable by the use of the imperfect as an aorist in Homer—the descriptive imperfect, which Monro describes as producing in a measure the effect of the Historical Present for epic diction.

It remains to add a word about the formation of the first or weak aorist. From forms of the present, like λείπω, which differed from the second aorist in stem, were formed an aorist ending in α, or more usually σα. These had at first the personal endings of the strong aorist

in all persons but the first, as is clear from Homeric forms like ἐβήσετο and ἄξετε; and ἔπεσον has preserved the strong aorist endings. But the rest have assimilated to the α of the first person all other personal endings but that of the third sing., which remains ε. How did this aorist originate? Curtius thought it the result of composition. It consisted of the root + *asam*, Latin *eram*, Greek ἦν (= e + es ṃ). This theory is abandoned to-day; a little too readily, Fick used to say. But perhaps the weak aorist rather followed the analogy of one of the forms in which the imperfect of εἰμί (e + es ṃ) appears, than resulted from composition with it; for (e + es ṃ) appears in Greek as ἦν or ἦα, α being a common equivalent for ṃ—and perhaps this form ἦα became the starting point for aorists in α. But what of the usual ending σα? Of course ἦα was for old ἦσα, and we find the third plural in Æolic as ἔσσαν. If this presupposes a first sing. ἔσσα, as Fick believed (the form is not found in the rather scanty remains of Æolic), the new ending might easily be got by false division, for the root is ες, and σα might well appear to be an ending.

THE SOCIAL IDEALS OF PLATO AND WILLIAM MORRIS.

J. C. ROBERTSON, B.A., TORONTO.

William Morris, poet, artist, socialist—this has become almost the official title of one of the most charming writers, and one of the most interesting characters of our day. He was a man of singularly varied interests and of manifold gifts, and yet, even in the matter of comprehensiveness and range, to say nothing of other qualities, inferior to that noble Greek—at once dramatist, philosopher, seer and reformer—who has so profoundly influenced the thought and aspirations of succeeding ages. Obviously one can deal in the short time I shall have only in a fragmentary way with two such men, even when one disregards every other aspect than their common interest in the reform of society. What I shall attempt will be to call attention to certain relations between their social ideals as they are given in Plato's "Republic" and Morris' "News from Nowhere," dwelling especially on a few important differences. The criticism of their social systems from the point of view of practical politics, I shall not attempt at all. We are not sociologists here.

With the "Republic" you are all more or less familiar, and it will suffice to recall the main features of Plato's proposals by reviewing briefly the principles underlying his ideal state.

In Plato's view the perfect life for man is found only in society, for the capacities of men are both various and limited, and none is sufficient unto himself. The state, therefore, should be so organized that those best qualified to guide it wisely shall rule, and the rest harmoniously co-operate, each one contributing to the common weal that which nature has made him capable of contributing (after an education that shall both test and develop his native gifts), and each one in this way realizing to the full all that he is capable of becoming. To those whose best contribution is the ability to govern, the philosopher-kings to whom it has been given to apprehend the eternal principles which are realized in a perfect life—to these is assigned the three-fold function of (1) the discovery of truth and the application of ideas to life; (2) the determination of the latent powers and capacities of each child born into the State;

(3) the providing of an education and an environment which shall train and develop to their full capacity the natural endowments of each member of the State.

On many points Plato does not go into detail, reasoning that, provided wise rulers be attainable, their wisdom will settle all such matters. His attention is chiefly given, therefore, to the problem of deciding the character of the training and mode of life which shall secure for the state rulers of this stamp. Among the most striking features he thus dwells upon are those dealing with the education of the guardian-citizens, the mode of life of the rulers, and the equality of the sexes. As to the last, Plato believes that the civilization of his day did not call out all that women were capable of; that they could contribute to the common weal much more than their mode of life in Athens allowed them to do. As for the first-named, the education of the citizen, there is to be a careful discipline and constant testing that will ensure moral stability and loyalty to the cardinal principles of the state, so that there shall be developed finally in each the contrasted qualities of strength of character and refinement of soul. For only on such a foundation can be built that intellectual insight into truth which is the highest and the rarest power possible to man. As for the life of the rulers, the main features are the simplicity (half military, half monastic) of their daily life and their surroundings; and the sense of brotherly unity which involves the abolition of such institutions as private property and family life, in order that the ruler may not live selfishly for himself, but unselfishly for the community, esteeming no one dearer than another.

And all through the state, in every class, in every relation of life, runs the principle of doing to the best of one's ability that *one* thing which nature has made him best capable of doing; for, on the one hand, dissipation of energy and attention interferes with effective service, and leads to weakness of character, and, on the other hand, in the realization of capabilities lies the perfection of humanity, as in unselfish co-operation lies the truest happiness. Only by co-operation can men make the best of life, and only by doing one thing well can each one properly co-operate.

In Morris' "News from Nowhere," which he calls "Some Chapters from a Utopian Romance," we have a charming and idyllic sketch, yet vivid and virile, of the life of England as it might be if what Morris considers the hideous civilization and industrial slavery of the nineteenth century could be replaced by

the life of beauty, fellowship and joy in life, in which he believes ideal happiness for mankind would be found.

Time will allow me but the briefest sketch of this new epoch; for details one must go to the story itself, and there is no one here, whether interested or not in the topics this paper will discuss, or in socialism itself, that will not read with pleasure this most graceful and delightful of all Morris' works on social reform or on art. And I may add that the lover of Plato will find Morris' picture of life as much superior in nobility and charm to that of Bellamy's as is his style.

The chief notes of Morris' Utopia are simplicity and beauty in life; fellowship, equality and good will among all; men no longer slaves to commercialism, but finding the artist's delight in their work; and, as a result, peace and rest and joy in living. Some of the details of his picture may help us to realize what these phrases mean.

First, the country itself, and the homes and dress of the people. London is no longer a desert of brick and mortar, but has become a group of beautiful villages and towns, whose architecture, whether unpretentious or richly ornamented, is uniformly graceful and beautiful; though it runs the Thames, a noble and beautiful river, of which it is enough to say that now salmon run high up its pure waters, while the city no longer has slums and fogs, but basks under a clear sky in the midst of gardens and pleasant fields and forest glades. And all over England the same transformation has taken place; the unsightly manufacturing towns are gone, and while the population is the same as in the nineteenth century, it is "more spread," so that the country districts are more populous (for the people delight in country life) and the towns, no longer crowded, differ little except in size from the villages of the countryside.

Like the homes of the people, their dress is a delight to the eye, and the people themselves are wholesome to look upon, happy and well-built; their manner of life has made them both healthier and more comely, so that the woman of over forty looks like the fair maiden of twenty now. In the hayfields we find, in one chapter, the people working joyously, as though keeping holiday; the women dressed in light woolen, most gaily embroidered, or even in silk, the men all clad in white flannel, embroidered in bright colors, so that the meadow looked like a tulip-bed because of them; all working deliberately but well and steadily—though as noisy with merry

talk as a grove of autumn starlings. With these Morris contrasts the picture he often sees in England to-day, especially "the images of the women—the row of gaunt figures, lean, ugly, without a grace of form or face about them; dressed in wretched skimpy print gowns and hideous, flapping sun-bonnets, moving their rakes in a listless, mechanical way." And these haymakers *are* holiday-makers, delighting in exercise and in the country life, and have given up their life in town for a few weeks to enjoy the delights of the midsummer hayfield on the pleasant Thames-side, amid its delicious sounds and scents. This one scene I have given in some detail, to show how different must be the whole spirit and mode of life; and yet, impossible or absurd as the scene may appear to be, Morris' genius has made it seem, in its own setting, as natural as the gay plumage and joyous song of the birds haunting those sunny meadows. So far as the landscape and external appearance of things and people are concerned, those who know their Ruskin will understand pretty clearly the new England of Morris' romance by imagining an England such as Ruskin would have delighted in.

But it is more important, for our present purpose, to pass to the mode of life and the institutions of the people. Here, too, a great transformation has taken place. The people are no longer divided into the two rival classes of employer and employed, or capitalist and laborer. Brotherhood and equality, not competition and inequality, prevail. There is no longer the frantic desire to grasp as much as possible of the fruits of another's labor. The struggle for life (which Morris translates into "the struggle for a slave's rations on the one side, and for a bouncing share of the slaveholder's privilege on the other") no longer forces men to create artificial necessities that they may enrich themselves by satisfying them; no longer leads to cheapening of production, which chiefly, Morris holds, means making wares to sell and not to use, of inferior quality and workmanship, but bought because cheap, that is, produced with the least possible exercise of care and labor; no longer leads to attempts to open up new markets, which, in Morris' eyes, mean merely creating new wants among helpless, hapless, inferior races, who have to sell themselves into a new slavery of toil in order to be able to purchase the hideous and unnecessary wares of civilization.

The hurry, the degradation, the sordidness of the workman's life is gone. The necessities of life, even of refined life, are after all really few and obtainable with comparatively little toil; and so

in this new epoch men have been able to discard that labor-saving machinery which, after all, has failed to lessen the labor of a single human being, and what they need is chiefly made by hand. Thus the maker, possessing leisure, and able to choose what work he likes best to do, is able to do it well and to make his work artistic and beautiful; he loves his handicraft as the true musician or the true artist loves to exercise his gifts, and is, therefore, not eager to escape from his work or invent a machine to do it for him. Beauty, serviceability and good workmanship are alone considered in production; and joy in creating articles of beauty and use has taken the place of the enforced drudgery of former days.

As men love their work for their own sake and delight in it, and as equality and fellowship exist everywhere, there is no such thing as buying and selling, no coinage, no bartering. Stores and markets do exist, but only that the surplus products may be brought together to a convenient place for those who wish to come and choose from. These stores are tended either by people who take delight in keeping things in order for others' convenience, or by young people to whom the handling of various objects is a sort of education; and these, too, engage in this employment for a time because they like to, not because they must.

Private property and the desire for riches being thus abolished, it follows that poverty has vanished. There is held yearly in what had been the east-end slums of London, a festival called the "Clearing of Misery," at which a traditional feature is the singing of Hood's "Song of a Shirt." But not one of the people who sing this song is conscious of its real meaning—its tragedy has grown inconceivable to them. And crime has gone too, for crime Morris defines as not occasional error or transgression, but the habitual actions of persons driven into enmity against society. Criminal and civil law are, therefore, virtually abolished and the divorce courts have vanished too. In fact, in Morris' Utopia, marriage and divorce are matters entirely of personal agreement, in which the sexes are on an absolute equality, and no one dreams of attempting to force love and sentiment to obey civil contracts.

Politics and militarism, too, are gone, and government is reduced to a minimum; men still differ as to the advisability of this and that; but, as Morris puts it, "a man no more needs an elaborate system of government, with its army, navy, and police, to force him to give way to the will of the majority of his *equals*, than he wants a similar machinery to make him understand that his head

and a stone wall cannot occupy the same space at the same time." And so government is reduced to something like the New England town-meeting—called to talk over what may be desirable in the locality, and to ascertain what is thought by the neighbors of new proposals.

The people, finally, do not live in public, in large barracks or phalangsteries, but live as they like; and as a rule they like to live with certain housemates that they have got used to. Separate households are the rule, but houses are freely open to guests who wish to come and fall in with the ways of the household. The only recourse, but effective enough, against unpleasant companions is to "send them to Coventry."

Such is the skeleton, the dry bones, of the life Morris depicts for us. I scarcely need say that the story itself (though the plot is slight) is as different from this sketch of the institutions existing in the new epoch as a living human being is from its skeleton. But it may have served to illustrate the principles which I have said underlie Morris' ideal of life: joy in living, joy in producing works of beauty and serviceability, fellowship, equality and goodwill.

In spite of many differences in detail, the student of Plato, on reading for the first time "News from Nowhere," cannot but be struck by the great similarity of attitude and even of detail. But Morris' views are entirely his own; it is no case of mere imitation Rather, a certain kinship in general principles has naturally led each to very similar conclusions.

The important correspondences seem to be reducible to three:

(1) Plato's idea that virtuous activities (Aristotle's phrase, I know, but none the less Plato's idea) are their own exceeding great reward; that happiness is the due exercise of one's capacities, is traceable all through Morris. "'How [do] you get people to work when there is no reward of labor, and especially how [do] you get them to work strenuously?' 'No reward of labor?' said Hammond gravely. 'The reward of labor is life. Is that enough?' 'But no reward for especially good work,' quoth I. 'Plenty of reward,' said he, 'the reward of creation—the wages which God gets.'"

(2) The doctrine of co-operation and reciprocity, brotherly unity and mutual goodwill; the conviction that man is, as Aristotle tells us, *φύσει πολιτικός*.

(3) A conviction that the perfect life can be led only when man

is in his proper environment and under proper institutions. Both Morris and Plato, therefore, are inclined to lay all the stress upon bringing into existence a certain organization of society, in the belief that this will shape defective human nature aright instead of being content to reckon with the tendencies and possibilities of human nature as it exists; and in both there is not a little of the temper of the doctrinaire.

And now I wish to call attention to certain important differences between the two ideals—this being, after all, the real purpose of the paper.

(1) In the first place, those innate and ineradicable differences between man and man, of which Plato makes so much—that necessary division into classes, based on difference of capabilities and functions, on which the whole "Republic" is built up—all this is absent in Morris.

This we may regard as in part merely resulting from the modern repudiation of slavery and caste, from the recognition of democracy and the brotherhood of man. And Morris himself, in one of his lectures on art, while praising the simple, dignified, almost perfect life of the Athenian citizen, yet objects that his civilization was founded on slavery; that, while the ancient peoples showed us forever what blessings are freedom of life and thought, self-restraint and a generous education, yet they kept all these blessings to themselves; indeed, he holds that ancient civilization fell, just because it was chained to slavery and exclusiveness. So he himself insists on equality, making the aspiration after complete equality the bond of all happy human society; he insists on the democratization of art, preferring that art should for a time leave the earth rather than that it should be confined to a few exceptional men; he insists that there must be no "residuum" or "submerged tenth"; civilization, he holds, is merely organized injustice and a disguised slavery if it does not aim at giving some share in the happiness and dignity of life to all the people. Of course in Plato's "Republic" there is equality, in the sense that everyone has the opportunity of making the best of himself, but Plato cannot but think the ideal life confined to a few exceptional men.

Here we discover that the difference I have spoken of is due to something more than the fact that Plato is in a sense aristocratic and Morris democratic; that it is due to a great divergence between the respective ideals they conceive.

Plato measures men largely by their possession of intellectual

insight (not opposed to, but inseparably connected with, moral virtue and the spiritual vision), and certain forms of activity he holds to be intrinsically higher and nobler than others. Yet obviously it is only the gifted few that can attain to this higher life. But Morris' ideal is the happiness that comes from doing *anything* well and artistically—that may come as well to the dustman and the housemaid as to the sculptor and the poet.

If the possession and exercise of certain rare powers be the most desirable thing in life, then obviously men are unequal, and the fault of the Athenian democracy Plato rightly held to be regarding as equal what God had made unequal. But if the ideal life is to be, as Morris has it, an "art made by the people and for the people, a joy to the maker and to the user"; if the cause he strives for be, as again he says, "the democracy of art, the ennobling of daily and common work"; and if the greatest happiness man can know is brought, not by the acquisition, after laborious and long-continued discipline and study, of an insight into the mysteries of life and of the universe, but, as again he says, by "the present pleasure of ordinary daily life"—then men may easily be regarded as equal in capability for attaining the ideal. For Morris seems to think one faculty about as good as another; and if any special place must be given to contemplation of truth and love of learning, it is below, rather than above, the mechanical arts and handicrafts.

(2) Again, differences arise, as we might expect, from both the personality of the two writers and the character of the times in which they lived. All Utopian literature may have both a biographical and an historical interest as well as a speculative interest.

As to the former—the writers' personality—the fact that one is an artist, the other a philosopher, explains many of the differences in point of view, and many of the differences, too, in proportion or emphasis.

Again, Morris, while a Socialist in name and theory, was in reality intensely individual in his manner of life. A recent writer in the *Art Journal* says: "To see him was to know him for a rebel born. He was inclined to divide men into two classes—flunkeys and rebels. . . . Conformity to him was slavery. He would follow no custom. Usage? That was a reason for not doing likewise. His behavior was individualistic. He dressed, spoke, did as he pleased himself, and had nothing but contempt for orthodoxy of whatever kind." He once told his friend, Theodore Watts-Dunton, that civilization was the greatest curse that had ever fallen on the

human race. He was imbued with the wild, free spirit of the Scandinavian sagas, and from his appearance might have been a Norse Viking himself, owning allegiance to no one.

It has been said of him that if his own views had prevailed, and radical socialism been established in England, he would have become a bitter foe of the reconstituted society, and would soon have been put to death as a dangerous enemy to socialism. And so we find him not merely criticising profit-sharing co-operation as no remedy for the evils of competition (for competition among the co-operative societies would still remain), but also actually declaring that governmental or state socialism, with its regulation of wages and prices by law, would simply bring men back to a condition approaching the Roman doles to the poor.

In truth, it is something like anarchism rather than socialism we find in "News from Nowhere." The almost total absence of government, the insistence upon freedom, the complete license given to each man to do exactly what work he pleases and to do it as he pleases—all this is very different from Plato's rigid discipline and insistence on restriction to one occupation (and that, too, one chosen for, rather than by, each man). To put it briefly, we may say that just in so far as Plato was influenced by Sparta, his socialism parts company with Morris'. The latter's ideal in many respects, in its versatility, its freedom, its eagerness, suggests rather Pericles' "Funeral Speech" than Plato's "Republic."

Then, too, there is a difference proceeding from the character of the civilization with which each was familiar. We need never expect the last word from socialism or radicalism; as conditions change from age to age men will insist now on this, now on that, as the one essential reform. The evils against which Morris inveighs—sordid commercialism, unrighteous and unlimited competition, industrial slavery, the degradation of humanity to the pursuit of wealth—these were not evils which Plato had much need to protest against. Indeed, we feel that the Athenian went too far in his contempt for the man who (whether with hands or brain) works for his living.

This may be seen most clearly, perhaps, in the two writers' different attitude to the division of labor. A point of which the importance is not ordinarily recognized in Greek histories is the enormous extent and importance of the institution of the lot in Athens. Athenian democracy cannot be thoroughly understood except in connection with the theory on which the lot was based—

that the citizens were to be equally capable of assuming any one of the thousands of offices filled regularly (and in rapid rotation) by this system. Holm, I think, is right in believing that Pericles, recognizing that the democracy connected with this institution had come to stay, and seeing the evils that might easily result from so haphazard a system, sought to educate the citizens so that they should each and all be capable of filling satisfactorily any of these offices of state. Plato evidently saw the same danger, but did not believe in this remedy of Pericles; and his attack on Athenian democracy is chiefly from this point of view. He contends that a man cannot do various things well—that there is a right way (that is, a science) of doing all things, of governing included—and that only he should be intrusted with office who possesses special and exceptional qualifications to rule. Hence the principle of division of labor is insisted on by Plato as a safeguard against inefficient versatility and ambitious incompetence.

But in the modern world this principle has been generally adopted, and then, being carried to an extreme, has itself become a source of danger. In the industial world the minute division of labor has brought it about that a workman now-a-days very seldom makes the whole of anything. In our great manufactories we may find men spending their whole time in feeding a machine with tiny bits of metal, or polishing pin points, or filing steel bars. The finished article has passed through the hands of perhaps a score or two of men, and the result of this condition of things is that the workman tends to become simply an animated machine, even more deserving of the term ἔμψυχον ὄργανον than the slave in Aristotle; his work becomes monotonous, and little or none of the joy of the creator and artist remains to him.

So Plato the socialist insists on division of labor as the cardinal principle of the state, and in his eyes versatility is of the essence of evil; while Morris the socialist, not because of any difference in fundamental principles, but because of the accident of the times, takes the opposite position. Plato seeks, above all things, to avoid fickleness and incompetence; Morris to avoid monotony and joylessness.

3. The third and last point of contrast is more far-reaching, however, than either of these two.

The ideal to which Morris looks forward is essentially materialistic, as opposed to the spiritualism of Plato (using the word spiritualism in the wider Greek sense, to include all that belongs to the

mind—the world of thought). Human welfare is too much with Morris a matter of physical conditions; beyond the present life he never looks, and in this present life what he dwells on is always the beauty of material things, the delight in physical health and beauty, the joy, not of high thought, but of skilful handiwork.

"She led me up close to the house, and laid her shapely sun-browned hand and arm on the lichened wall as if to embrace it, and cried out, 'O me, O me! How I love the earth and the seasons, and weather, and all things that deal with it, and all that grows out of it—as this has done!'" And again: "The spirit of the new days [is] delight in the life of the world: intense and overweening love of the very skin and surface of the earth on which man dwells. . . . The boundless curiosity in the ways and thoughts of men which was the mood of the ancient Greek [is] gone." And again, "After all it is the world we live in which interests us. The phenomena of earth and sky—these are our books in these days.'" These words are not exceptional, but typical; joyous beauty, radiant health, exuberant life, the passionate joy of living—this is the highest aspiration of the dwellers in this new world. And conformably to this the education of the young is not to develop character or to strengthen the powers of the mind, but only to teach them how to do things with their hands. Another sign of materialism is the theory that the whole foundation of society is to be based on material necessities and economical conditions. Yet Morris' devotion to art and recognition of beauty prevent him from being so completely engrossed as many socialists are with the dull level of utilitarian comfort.

How different all this is from the idealistic spirit of Plato it is needless to portray; indeed, Plato seems too often to go quite to the other extreme and unduly despise the things of sense. Yet, though in theory he may depreciate this world in which we find ourselves, every careful reader of Plato knows that he has as keen an eye for the beauty of heaven and earth as any artist or poet of his day. Is it not, indeed, the vision of beauty in the world about us that, according to him, first kindles in the soul a longing for the vision of eternal beauty? Morris goes no further than the beauty of earth and sky; Plato sees beyond all this a spiritual vision of better things. For Morris, the lust of the eye and of the flesh suffice; Plato holds with Shelley that "life, like a dome of many-colored glass, stains the white radiance of eternity."

It is in this materialism that one catches sight of the connection

between Morris the poet, "the idle singer of an empty day," and Morris the socialist, "slayer of dragons." In his poetry there is over and over again the note of joy in life saddened by the certainty of death—a mingled eagerness and weariness.

> "Ah! what begetteth all this storm of bliss
> But Death himself, who, crying solemnly
> E'en from the heart of sweet Forgetfulness,
> Bids us 'Rejoice, lest pleasureless ye die.
> Within a little time must ye go by.
> Stretch forth your open hands, and while ye live
> Take all the gifts that Death and Life may give.'"—*Jason.*

In the "News from Nowhere" he puts aside the thought of death, and displays an almost feverish eagerness to enjoy whatever is beautiful and delightful in life, with no thought of aught beyond; while Plato has apparently a firmer faith in the immortality of the soul than he has in even the theory of the ideas, and again and again we find in him the conception of this life as a preparation for another existence when the soul shall be free from the trammels of the body.

In these two respects, then, Morris' ideal is material as compared with Plato's; first, he has no thought of anything beyond the present life; and, secondly, even in this present life he regards the things of the mind as of less value than the delights of the senses.

You will not match in Plato the following attempt to translate into the emotions of life, as we know it to-day, the impression produced by the joyous realization of Morris' ideal in his Utopian England: "'Do you remember anything like that, guest, in the country from which you come?' 'Yes, when I was a happy child on a sunny holiday, and had everything that I could think of.'" No Greek ever regarded the child's happiness as the ideal for men to aspire after, but it not unfairly represents the very highest felicity of which Morris dreams.

To be sure, there is something very like this in Greek life; much of the peculiar Greek spirit consists in the limitation of the ideal of perfection to this present life; as Symonds puts it, "to yearn for more than life affords was reckoned a disease." And just so far as joy in physical life and the symmetry of physical powers constituted the Greek ideal, we must recognize something in Plato not quite typically Greek. But there is always something more in the Greek spirit than this note which Morris catches. One never gets the Greek notion of *καλός* until he learns to associate with it much more than our notion of beauty. The Greek is wrongly said

to have had a purely æsthetical ideal; rather, he blended the æsthetic and the ethical in a union to which we find it hard to attain. It is quite unfair to say that the only conception of good he recognized was what we call beauty and symmetry and harmony; rather should we try to comprehend what it means to hold that nothing can be beautiful if it be not good also, nothing can be good and not be beautiful.

And we are again in danger of error when we talk of the Greek always fashioning his gods and his ideals after human forms and human life. There is a great difference between looking upon the beauty or fulness of mere human life as the highest ideal we can imagine (as Morris seems to do), and viewing one's ideal always after the image of a beautiful and perfect human life (as the noblest Greeks did). The former may and does lead to a sort of materialism (a refined sort perhaps); the latter may lead—nay, historically, it did help to prepare the way for a vision of the divine incarnated in man. The former looks only at earth and calls it heaven, the latter seeks to bring heaven into touch with earth.

May we not say that the peculiar Greek note (as seen in its noblest minds) was a unique combination of spiritual idealism with a keen love of life and human nature as it is? To-day we are apt to find that, on the one hand, where the spirit of contented enjoyment with what this present life affords prevails, the spiritual vision has been lost; but in that case we have Paganism, not Hellenism; and that, on the other hand, where idealism and the spiritual outlook are found there is also the thought of advance (whether for the individual or for the race) beyond the limitations of the present. The Greek in some now unattainable way managed to combine both characteristics, and hence in large part comes that inextricable mixture of ideal perfection with contented limitation which so baffles the comprehension of us moderns.

So, in spite of a certain resemblance to Morris' attitude, the ideal of Greece is spiritual after all; certainly the ideal of its choicest spirits, and even, perhaps, the characteristic outlook of the people as a whole, goes beyond the merely physical and material in life. And Greece is remembered, and Greece still sways the thoughts of men, not because she was artistic, not because in the fresh enjoyment of life and beauty she rejected a one-sided Puritanism, still less because of her institutions or her organizations or her material achievements, but because, amid all the beauty and glory of her physical and material life, she looked not merely at the things which are seen and temporal, but also at the things which are not seen and eternal.

DOERPFELD AND THE STAGE OF THE GREEK THEATRE.

A. L. LANGFORD, B.A., TORONTO.

The question discussed in this paper lies in a field hitherto almost entirely neglected in our classical course. If we may judge from examination papers as to the ideals of our educators, archæological subjects are not touched upon in our lectures. History, Philosophy and Philology are all more or less thoroughly investigated, but the many questions embraced by the very comprehensive word archæology are quite neglected. Thus far, referring more especially to the plays of the Greek dramatists, we have been satisfied to study the dramas merely as literature, and we do not enter upon the field of the influence of Literature upon Art and the inverse influence of Art upon Literature. Further, the question of the actual presentation of a play has not been dealt with at all fully, and most of the honor graduates even have very indistinct notions how a Greek theatre looked on a festal day and what differences one might expect to see should one be transferred from the Grand Opera at Toronto to the Dionysiac Theatre at Athens. These subjects have been investigated mostly by German scholars until of late years, when the schools of different nations have vied with each other in striving to get as close as possible to the actual life of the ancient people of Greece. The great authority in our student days on all matters relating to the theatre was Donaldson, and, until Haigh's book of '89, it remained, as far as I can find, the only book for English readers. Now, however, when the battle is being waged between the "old-stagers" and the "no-stagers," as Gildersleeve, with his pithy phrase-making way, says, it is a fitting subject for this association to consider whether there was any stage or not. Moreover, some may perhaps be moved to study further in this department of classical work when once they have whetted their appetites on so toothsome a morsel as the "stage question."

It will be best for me first, by way of introduction, to set down some of the views held till Doerpfeld gave his conclusions to the world. Vitruvius is the only authority from ancient times who has given us definite information. He was a Roman architect

living about the time of the first emperor, and his work shows—so those say who have been fortunate enough to have had the opportunity to verify it—a most careful and accurate investigation of the buildings he describes. His statement on the stage question is, *ejus logei altitudo non minus debet esse pedum decem, non plus duodecim* (Vit. v. 7. 1 §4), which, being interpreted, says: The height of the stage ought not to be less than ten feet nor more than twelve. This is a plain, straightforward assertion, and was accepted as final testimony until the last few years. Building on this assertion, all subsequent writers have constructed their theatres with this difference in level between the stage and the orchestra. Donaldson (fourth edition, 1826) draws a very elaborate plan, and states that the space of the orchestra and parodoi was excavated to a depth of twelve feet (p. 140), and that the stage was at an equal elevation above the orchestra with the lowest tier of seats of the auditorium. It will be noticed at once that Donaldson felt no objection to the acting being done on a level with the lowest tier of seats, an esthetic objection which has been urged against Doerpfeld's view.

These theories were the ones in vogue till the difficulties presented, as Donaldson expresses it, became too numerous for the acceptance of the older ideas, and new ones were devised. The most modern of the German views in book form, *i.e.*, preceding Doerpfeld, is that of Albert Mueller, in "Lehrbuch der Griechischen Buehnenalterthuemer," 1886. His idea is that the orchestra was at the natural level, *i.e.*, at the level of the lowest seats, that the stage was elevated, and that the thymele was a wooden platform put up in the orchestra temporarily for the use of the chorus. I have not this book at hand, and cannot give you his figures, but it is probable he would agree with Vitruvius as to the question of the height of the stage in order to find room for his platform. The question naturally is asked, why any sane men would build a stage at an impracticable height, and then, to remedy that defect, instead of lowering the stage, build another stage half as high in order to get to the first one, that was too lofty. I should be in great straights before I would feel like helping myself with this bright idea.

Haigh's "Attic Theatre," 1889,* is the best and newest English text-book on these matters, and his view is the old one, that the

* A second edition appeared during the time this paper was being prepared.

actors stood on a stage "considerably" above the level of the orchestra and the lowest tier of seats. Only Mueller and Haigh have Doerpfeld's view before them, and Haigh is very decided in his opposition to it.

In 1896, Doerpfeld-Reisch published their book entitled in English, "The Greek Theatre, Contributions to the History of the Dionysiac Theatre in Athens, and of Other Greek Theatres." This was the first time the revolutionary view of the stage, namely, that chorus and actors played on the same level, was presented in detail. In 1884, Doerpfeld had read a paper in Athens proposing the same view, but in 1896 the fullest statement was made. The work deals with everything that has to do with the buildings connected with the theatre, and treats of all the theatres that had been excavated up to the time of publication. Further, and this is Reisch's part of the undertaking, it deals with the literary proofs of the technique of the presentation of a play. It contains a very interesting chapter on "The Development of the Roman Theatre from the Greek," and a special chapter on "The Stage Question." Like many German books that Carlyle ran across, it contains no index, and, if you will remember that there are almost four hundred pages of most varied and detailed statements, you will appreciate the difficulty of trying to verify one's recollections from once reading the book. It is only right to state, too, that the general impression left by the work is that the writers are fair, reasonable and thorough.

There are two things which help us to form our ideas of the ancient stage; they are the ruins, and, best of all, the plays themselves. In the work which is being reviewed now, Doerpfeld, as a trained architect, treats of the ruins, and Reisch deals with the literary argument. I shall divide my subject into three departments: the archæological and theoretical argument; the literary argument; and, in conclusion, the reasons urged against Doerpfeld's theory.

The first excavations on the site of the theatre were undertaken by the Greek Archæological Society, in 1841, and their verdict was that the ancient theatre did not exist any more (*τὸ ἀρχαῖον θέατρον δὲν ὑπάρχει πλέον*). In 1863, 1882 and 1895 further work was done, at the last two dates Doerpfeld being in charge. He classifies the ruins thus: First period, sixth and fifth centuries, B.C.; second period, fourth century, Lycurgus; third period Hellenistic 290-150 B.C.; fourth period, Early Roman, Nero's time; fifth period, late Roman, Phaedrus, third century, A.D.

What a traveller sees on the spot is the theatre of Lycurgus with the trifling changes of the later renovators. Of all these, only the last period shows any trace of a stage.

Doerpfeld, for the sixth and fifth century period, maintains that there are traces only of a circle, the foundation of which being partly built and partly excavated out of the side of the Acropolis. This circle is a little south and east of the present orchestra, and, further, he states there is no remaining foundation of a stage building. This was the period of the first production of all the great dramatists' works, and on this spot they must have presented their plays. Still, it may fairly be answered, there may have been a stage of wood, and all traces of it might be entirely wiped out. Hence the ruins that are found of the later periods are of great importance for deciding all these questions, since it is hardly to be supposed that anything so characteristic as the place from which the actors spoke would be suddenly and radically changed when the first stone stage buildings were erected. Doerpfeld's arguments for the non-existence of a stage at any time are as follows:

1. Vitruvius' statement, made about the beginning of the first century A.D., is taken by the "old stagers" to be applicable to all different periods of the Greek theatre.

2. Vitruvius says "artifices" and actors, not chorus and actors, are on different levels. It is doubtful what meaning is to be attached to artifices—whether it should be taken, as it usually is in this passage, to mean chorus, or rather flute-players, etc.

3. There are no ruins of any buildings in the later theatres that Doerpfeld believes to be stage buildings.

4. If the stage were different from the proskenion, it would cut the pillars and doors of the proskenion in two, thus spoiling the beauty of the former and the usefulness of the latter.

5. *ἀπὸ σκηνῆς* and *ἐπὶ σκηνῆς*, not *ἀπὸ* and *ἐπὶλογείου*, are the technical expressions for the location of the actors. Doerpfeld translates these terms by "from" or "near" the tent or stage house.

6. The stage, if it were as deep as the proskenion, *i.e.*, 5-7 feet, would be too narrow for the number of performers who would have to be on it at times. *Cf. Œdipus Coloneus, Alcestis, Agamemnon.*

7. The point of concentration of the seats in the theatre. All persons in the theatre would be turned towards the centre of the orchestra, and naturally that point, or a place near it, should be the location of most of the acting of the play.

8. Any stairs coming from the stage, if it be the proskenion, would spoil the appearance of the pillars supporting it, whether they were built parallel with or perpendicular to the background.

9. Proskenion means background of play and front of the skene, not stage.

10. The danger to actors of falling from the stage if there were no railing, and a railing would be ridiculous. The masks and cothurni of the actors would make the danger even greater.

11. That the theologeion was elevated is no objection to Doerpfeld's theory, for the gods would be supposed to be aloft and could be excused for prudently staying away from the front of the stage.

12. The elevation of the stage is of no use to those sitting above the level of it, and a hindrance to those on its level and below it. Doerpfeld tries to make too much of this, if we judge from his illustrations. In his illustrations the distance between the occupants of the front seats and the stage is too short, and thus he makes the disadvantage of sitting in what were the best seats greater than it really was.

13. Vitruvius' statement is one of the chief obstacles to Doerpfeld's theory. He tries to account for what he considers a mistake on Vitruvius' part in the following way: Vitruvius was used to a stage, and, on the plan of a Greek theatre, which he likely had before him when making his statements about it, he found nothing designated stage, but in the place occupied by that structure in the Roman theatres he found proskenion, and naturally took that for stage. His description tallies fairly accurately with the remains found of such portions of the theatre.

14. Actors and chorus are supposedly standing before a temple or palace or some such building. If, however, the actors are on an elevation supported by pillars, such as are found in our present ruins, before what is the chorus standing, some ten or twelve feet below them? The chorus approaches as a rule from the parodoi and naturally would be supposed to be coming along a street passing before a building, but when it reaches the scene of the action it finds that the objects of its interest are elevated out of sight.

The literary argument. This is the most important argument for the settling of this question, for it is the only one we have in anything like its entirety. All buildings contemporaneous with the dramatists are lost, but their works remain, and it certainly

would be strange did they contain no hints as to their staging. Of late years the plays have been read by both parties, and ardent supporters of each side have found material to help their own cause. With Haigh, I think much is overstrained, and I suggest that often the theory is father to the exegesis. Still, doubtless, there are instances where the actors and chorus pass from orchestra to stage, and *vice versa*, and these are frequent enough, even with cautious acceptance of them, to justify one in doubting the existence of a stage anything like the height of Vitruvius'. The following are instances of intercourse between stage and orchestra. Several of these citations are taken from Capps' article on "The Stage according to the extant Greek Dramas."

(*a*) Actors approach along the parados, and afterwards enter the skene.

1. Agamemnon in *Agamemnon* comes in on a car (v. 906) and then enters the house (v. 957). Cassandra, too, enters as Agamemnon did (v. 1039), and likewise goes into the house (v. 1313).

2. Ismene in *Œdipus Coloneus* (310 ff.). As this is, in my judgment, important, I shall read Jebbs' translation of the passage.

"An.—O Zeus, what shall I say, what shall I think, my father?

"Œ.—What is it, Antigone, my child?

"An.—I see a woman coming towards us, mounted on a colt of Ætna; she wears a Thessalian bonnet to screen her face from the sun. What shall I say? Is it she, or is it not? Doth fancy cheat me? Yes—no—I cannot tell—ah me! It is no other—yes—she greets me with bright glances as she draws nigh, and shows that Ismene and no other is before me."

After two more lines Ismene speaks. Ismene evidently approaches through the left parodos as coming from Thebes, the scene being at Colonus near Athens, and riding on a colt. Jebb thinks that she did not ride the colt into the theatre, but, though it is bold I know, I think he is mistaken. Why mention the riding, if it is not seen later? It is one item in a description, and a lack of it would excite amazement at once when Ismene appeared shortly after afoot. After entering by the parodos she leaves the theatre at 509, and goes to the further side of the grove to pray to the Eumenides. That must mean that she goes back over the stage, if there be one. But look further at the scene where Ismene approaches. The speaker, Antigone, must be placed in such a position that her doubts about the stranger must seem probable. She evidently first sees only a woman who does not appear to her

to be even an acquaintance, then seems to see her sister, then she knows it must be Ismene. She, Antigone, must be placed where she can see Ismene approaching for some time. Now, that cannot be back behind paraskenia, which protrude sixteen feet into the parodos. Hence, the fair conclusion is, either there were no paraskenia at the time Sophocles wrote and the actors could see along the parodos from the stage, or the actors played their parts some little distance out from the proskenion, past the front of the paraskenia.

(*b*) Actors come out of the skene and afterwards leave by the parodos. Both illustrations of this are taken from *Alcestis*. At v. 606, Admetus comes from the palace with the body of Alcestis and asks the chorus to sing a hymn in honor of the dead as she goes on her last journey. He, with the body, and accompanied by the chorus, leaves the theatre at v. 746 to bury Alcestis. It seems to me that it is only a fair interpretation of the passage to think that they all go out together and do not leave for the same funeral on levels ten or twelve feet apart. Further, when Admetus (v. 861) returns, he addresses his palace as though he were appearing in front of it, not as just coming out of the wing of it, as he would were he to come from an entrance in the paraskenion. Further, Heracles (v. 773) comes from the palace when the wine has warmed his heart and made him a philosopher. He leaves to rescue Alcestis (v. 860) and must go by the same way as Admetus and the chorus went; hence, if the former interpretation was correct, he must go out by a parodos.

(*c*) Chorus comes out of the skene. The first words of the chorus in the *Choephoræ* show that it appears from the palace, ἐκ δόμων ἔβην. Capps cites several other instances of this method of the chorus' appearance, but some of them are doubtful.

(*d*) The chorus approaches or mounts the stage.

1. In *Agamemnon* (v. 1652), the chorus threatens violence to Ægisthus, and such are its movements that Clytaemnestra thinks it necessary to interfere. It must have been closer than Vitruvius' stage would lead one to think.

2. In *Ajax* (v. 898), Tecmessa finds Ajax after she and the chorus both had been searching for him. It would be absurd to think of the chorus searching for Ajax down at its level, if it were ten feet lower than Tecmessa. His body when found was to be seen by the chorus if Tecmessa (v. 915) had not covered it with a shroud. Later (v. 1182), Teucer tells the chorus to stand near the body

(*πέλας παρέστατ'*) to help while he goes away to arrange for the burial. It would be ridiculous to give such an order if the chorus still stayed so far away as it must have been if at the orthodox distance. It would add to the ridiculousness of the situation if the persons, who presumably are to be warded off, are to approach by an entrance which the chorus from its position cannot protect.

(*e*) The actors go to the audience.

Illustrations, as far as I have been able to collect them, are confined to comedy.

1. *Frogs* (v. 298), when Bacchus appeals to his priest, who occupies the centre seat in the front row, to save him for future drinking bouts.

2. *Peace* (v. 926), where the slave answers Trygaeus and says that he has thrown *κριθαί* to all the spectators.

(*f*) The actors and chorus leave theatre together.

1. *Alcestis* (v. 422), when going to the funeral.

2. Closing scene in Ajax, *ἀλλ' ἄγε πᾶς, φίλος ὅστις ἀνὴρ φησὶ* that he *παρεῖναι, σούσθω, βάτω.*

3. Different comedies of Aristophanes in the exodos: e. g., *Peace.* Thus, to sum up this part of the subject, actors and chorus, on different and rather frequent occasions, pass from orchestra to stage, and *vice versa*, and from parados to stage and *vice versa.* It certainly would look as though it were no difficult matter for each of these to do this, and the easiest explanation of this constant and unrestrained intercourse would be that actors and chorus were on the same level.

There now remains still the treatment of the other side of the question. The parties to this debate are divided along national lines almost. Englishmen and conservative Germans, not many I think, are orthodox, while Americans and the majority of German scholars agree more or less with Doerpfeld. The orthodox view will be found represented by Harper's Dictionary of Classical Literature and Antiquities, and by Haigh's Attic Theatre. The latter only recently has appeared in a second edition and his views shall be given. He divides the subject into later and earlier stage, meaning thereby the stage from B.C. 300 down and the stage preceding that date. He discusses each period from the literary and the archæological standpoint.

A. Later stage.

I. Literary Argument.

1. Vitruvius' statement that the stage was ten to twelve feet

high and ten feet deep, is confirmed by the remains of the theatres.

Doerpfeld answers this in two ways:

(*a*) Vitruvius was mistaken. Haigh replies, how could it be probable that a trained architect like Vitruvius could make a mistake? Still, if he did err on a matter of such importance as this, some one would have corrected him.

(*b*) Vitruvius was referring to Asia Minor Græco-Roman theatres, which are a transition between Greek and Roman. Haigh's reply is that it is not likely that Vitruvius said Greek and meant Græco-Roman, and that these Asia Minor theatres do not agree with Vitruvius' statements as the Greek ones do.

2. Pollux says IV. 127 (quoted by Haigh), *εἰσελθόντες δὲ κατὰ τὴν ὀρχήστραν ἐπὶ τὴν σκηνὴν ἀναβαίνουσι διὰ κλιμακων.* Doerpfeld here translates *σκηνή* as tent, stage buildings; but why, asks Haigh, should a man use a ladder to get into a tent?

3. Scholiasts speak of mounting a *λογεῖον*, a speaking place, not a proscænium. Doerpfeld says these scholiasts are late writers and hence are not authoritative. But the scholiasts are compilers, not personal observers; they sometimes mention their Alexandrian authorities, and these reach back almost to classical times.

4. Horace's statement, *Ars Poetica 179, Æschylus et modicis instravit pulpita tignis.* It is not likely that Horace is mistaken about pulpitum, for he lived for some time in Athens and should know whether the structure he is speaking about is actually a stage or not.

II. Archæological Argument.

1. The space behind the proskenion was left unexcavated, or when open at first it was later partly filled. The theatres at Sicyon, Eretria and Oropus, Haigh refers to. The meaning of this is that the space behind the background would be important as being the house or palace into which the players retire. If the proskenion is the background, it is strange that there is no place behind it for the actors to go to change their costumes.

2. The height of the proskenion was such that doors would not be much more than six feet high. This would necessitate stooping on the part of kings when coming out of their palaces clad in kothurnos and onkos. Doerpfeld says the background was the height of a house in Athens of the time under treatment. But this is doubted, and further, the background should represent as a rule not a house but a temple or palace. Further, the background is out of all proportion, 60x11 feet, to stand for a temple.

3. Vitruvius and Pollux speak of there being at least three doors in the background. The ruins shew sometimes one or none, hence the proskenion cannot be the background.

4. Vases of southern Italy shew stage and stairs connecting with the orchestra.

B. Earlier Stage, 4th and 5th centuries.

I. Literary Argument.

1. Aristotle uses *ἀπὸ τῆς σκηνῆς* and *ἐπὶ τῆς σκηνῆς*. Doerpfeld translates these expressions at or before the background. But Aristotle seems to be speaking of different locations, not of spots at greater or less distance from the background.

2. The use of *ἀναβαίνειν* and *καταβαίνειν* in Aristophanes.

Doerpfeld says these expressions mean only enter and retire. However, in *Knights*, v. 169, Demothenes tells the sausage-seller to mount upon the table after telling him, v. 149, to mount on to something else that does not seem to have been high enough for him to see all the islands round about. The words used are *ἀνάβαινε* (149), *ἐπανάβηθι κἀπὶ τοῦλεὸν τοδί* (169).

3. That the actors would be obscured from the spectators by the chorus is proved by the statement that the most awkward choreutæ were put in the middle row of the chorus to hide them. The actors, as being behind the chorus, if they were on the same level as the chorus, would be very much hidden, and especially for the men in the front, *i.e.*, best seats.

II. Archæological Argument.

There are no remains of the stage of the 4th and 5th centuries; whatever there was must have been constructed of wood and has left no trace of its existence. Haigh, (p. 149, 2nd. ed.) states, however, as his conclusion, that owing to the frequent passing from stage to orchestra and *vice versa*, that " the stage of the 5th century cannot have been raised many feet above the level of the orchestra. The object of the stage was to place the actors in a prominent position, and to ensure that they should not be hidden from view by the chorus in front of them. This purpose would easily be affected by a stage of only a few feet in height."

This, then, is the statement of both sides to what is a famous controversy in the scholastic world, and the result is a difference of "only a few feet." Haigh in his first edition said the actors stood on a " considerably " higher level than the actors. It will be seen at once that he has altered his view " considerably" in the meantime. If I may give my own view on the matter, I am drawn to a com-

promise theory given in Haigh's 2nd edition (p. 198) and attributed to Robert, professor of Archæology in Halle, the last time I saw a reference to him. Robert says that in the 5th century there was no stage, but that in the 4th one was erected for the plays then written, in which the chorus was almost done away with; but when any of the older plays were reproduced the acting was all done on the level. This seems to me the best way of reconciling Vitruvius' definite statement with the almost as definite teaching of the dramas themselves.

SYSTEMATIC READING FOR CLASSICAL MEN.

CHANCELLOR BURWASH, S.T.D., LL.D., TORONTO.

The specialist in learning is at once a necessity and a creation of the modern age. A few centuries since a man might in the course of an average life become fairly master of the whole field of human knowledge. Even a century ago the field of learning, as distinguished from craft, was comparatively limited. But to-day the age of Methuselah would fail to suffice for the mastery of all learning, and the man is fortunate indeed, who with a mastery of one department combines the broad outlook over the entire field of human thought.

Perhaps the greatest danger of the specialist to-day is the neglect of this broader culture. Many things contribute to this. The special gifts and interest which first directed his choice of the field make that to him the easiest and most delightful. The habits of years have perhaps strengthened these natural proclivities until they have become a passion. Even the necessities of his chosen field of work no longer compel him to pursue a wider range of studies, for by the help of the magnificent encyclopedias and carefully digested catalogues of our modern libraries, he can lay his hand on any scrap of ready-made learning which he may require to fit into the special piece of work on which he is engaged. On the other hand, these necessities all press him in the opposite direction. Life is so short, and the growth of each special science is so rapid, and the workers are so numerous, that to keep abreast of his own department and make some little contribution of his own in his chosen field seems to be the utmost that one can accomplish; and to accomplish even this one must largely leave the rest of the world to till their own fields.

The danger thus is becoming imminent that in the field of learning, as in the field of craft, we shall degenerate to mere machines, making our age the most productive of any in the world's history of all kinds of things, both material and mental, but not of higher life or of better or stronger men. We should never forget that as vast accumulations of capital lower the value of capital, and as vast accumulations of goods lower their market price, so there may

be an overproduction of minute learning committed to the immortal custody of the press, stacked up in the huge folios of our libraries never to be disturbed again until it has grown to be too musty to be of any use. It has merely given us the gratification of finding out something which we think the world never knew before. It is after all stronger men that the world is calling for, and not more useless learning—a higher and more perfect life and not new books, especially not new books which scarcely anyone reads.

But you are ready to ask me, What has all this to with my reading as a classical specialist? If we followed your advice there would be no classical specialists, and in fact there would be an end to all accuracy and perfection in scholarship. But that is the opposite extreme. It is also an extreme which the competitive pressure of the age will scarcely allow to live or to get a living. With forty applications for every vacant mastership, nothing but perfect scholarship has a chance, even in our educational life. And yet there is a more excellent way. And perhaps that more excellent way can be reached by the help of your general reading.

First of all you owe something to your individual manhood. Here again you may learn a lesson from the mass of people who are working with their hands. For what are they crying out? For a richer, higher personal life. Their conception of that life may be very crude. Their capacity for that life may be very small. But understanding as they do that by their toil all the rich life which they see around them is created, they feel that a full share of it is their due. And hence the universal demand for better wages, shorter hours, and better conditions of life. The man who reads and works until he exhausts all his energy in the pursuit of his special department, may thus put himself exactly in the position of the toiler whose whole energy is exhausted in his craft. He may have hard muscles, but he has no fulness of rich life. It is a debt to your own manhood that you should employ some part of your general reading to broaden your horizon, and to put yourself in touch with other lines of thought and modes of investigation. Do not lose sight of the modern world in your study of the ancient. Do not forget nature in the pursuit of literature. Sit down now and then and rest yourself from Sanscrit roots by the solution of an algebraic problem. And let this diversity of mental exercise not be a mere diversion. Let it be sufficiently serious to be a true putting forth of power. Climb to a point high enough in the neighboring field to give you a new outlook so that the world

which you usually behold from the East may spread itself before you from the West, or from the Sunny South. It is not scrappy, superficial reading that I am now urging you to, but such work as will give you at least a fair mastery in some new field. You will grow to be a broader and a stronger man by means of such habitual exercise.

But let me add that you owe this to your own special work as well as to your own personality.

All our separate fields of knowledge lie within the broader domain of human life. All are thus parts of one common whole and are correlated throughout. We are all one body and members one of another, and the eye cannot say to the ear I have no need of you, nor the hand to the foot I do not need you, nor the head to the stomach I am independent of you. For the highest perfection of intellectual life, the blood of the whole must flow through every part. We are not unicellular plants or merely polyzoa, but a great tree or a highly developed and organized animal body. The ancient life has created the modern, and the modern life is at once the fruitage and the interpretation of the ancient. Our environment supplies the material for our thought and so largely helps to create our literature. The material world first awakens the spiritual, and the innate powers are called into conscious exercise by that which is without us. There is no line of study therefore which cannot find help from even those which seem to be at the farthest remove from it. The man who has completely mastered the physical geography, or to borrow a new word, the physiography, of Greece will find himself more perfectly at home in its mythology, its history, and its literature. Especially if in our studies we are seeking not mere knowledge of facts but rather of causes and far-reaching laws, we can arrive at these only from the higher view-point and the broader outlook. The interests of your special field of study are in this way not antagonistic to that broader culture which does justice to your personal manhood and your own richer intellectual life. The best work even in a special field will be accomplished, not by the narrow pedant who has lost his imagination, but by the man the free play of whose thought has been strengthened and enlarged by touch with many things.

But perhaps some one is ready to tell me that as classical men we have a field complete in itself, embracing all the elements of varied culture, doing full justice to our entire manhood, and affording all the necessary materials for every form of investigation.

Here is literature rich in all elements of esthetic and moral power. Here is a complete system of jurisprudence and materials for the study of varied political constitutions. Here are complete histories of varied and interrelated nations in which you can follow them from their origin to their final collapse. Here are philosophers of all the varied schools. Here are materials in abundance for several inductive sciences—of religion, of mythology, of language, of anthropology. Never was a richer field. What could a man ask for more? I grant all this. And but for this classical studies could not have held their own for the last thousand years.

The microcosm which lay round the Eastern Mediterranean, which never exceeded a score of hundreds of miles in diameter, and which ran its full course of development in less than half as many years, has afforded us a wonderfully convenient instrument for the education of men of a less perfect development and civilization, for such has all Western Europe been until quite recently. But the last two centuries have created a new world. They have introduced into human life new forces of which Greece and Rome know nothing. They are rapidly opening up for those forces a world-wide field of energy. Not the Aryan race type alone but all race types are to be moulded by their powers and are to contribute to their rich manifoldness elements, the power of which the world as yet knows little of. And if our classic culture is still to hold its own we must bring it into relation to the whole field of modern life. And to do this classical men must keep in touch with all modern movement, and must never cease to make the world feel that even the complex civilization of to-day would lose its most influential factor, yea, its very foundation stone, if it no longer felt the touch of the world and civilization of two thousand years ago.

POSTGRADUATE READING IN POLITICS AND ETHICS.

MAURICE HUTTON, M.A., TORONTO UNIVERSITY.

Though our University curriculum now includes—on the pattern of Oxford—a large element of Greek Ethics and Politics, the graduate who wants to continue the subject will have no difficulty in finding new works, both in the original and commentaries, sufficient to occupy his time during the remaining term of his present life on earth; after that—before he revisits again these glimpses of the moon—he will do well to look out for the career and body of some Buddhist monk in Hindostan; of some one who is not educated by the State in temperance and hygiene, agriculture and book-keeping and patriotism; of some one who is able to secure some leisure for Greek studies, and to pursue them further.

If Aristotle be the author preferred, those whose German is, for the causes already noted, inadequate, will now at last find a translation of Zeller by Costelloe and Muirhead.

It is now twenty years since Mr. Costelloe took his degree at Baliol and started this translation. Unfortunately, with other men of this preposterous age, he allowed himself, like the promising youths of Athens, to be seduced into practical life. He became an Irish Home Rule M.P., I think; a London County Councillor certainly. He trod the beaten track of these days, and made the modern grand tour of life with punctilious observance of each particular. The pursuit of these shadows deferred the enduring and substantial service to mankind which he had proposed to himself in the translation of Zellers' Aristotle; but now, thanks largely to Mr. Muirhead, it is before us, and will repay reading, so far as my experience goes. I have only finished the first volume at present.

Zeller seems to show beyond doubt that Aristotle succeeded no better than Plato, if as well, in evolving a consistent theory of the relations of the idea to the material, of the universal to the particular; that, in spite of his criticisms of Plato, his own theory cannot be rationalized—that, alternately, he makes the individuals or facts, and alternately the race, the type, the theory, the supreme realities of life (p. 339).

Zeller also brings out what I suppose strikes readers of the Ethics —Aristotle's quaint theory of the supernatural, supermaterial quality of the heavens. "All these shall grow old as a garment; as a vesture shalt thou change them, and they shall be changed," is a Platonic text in its spirit; but Aristotle deifies the heavens, and attributes to them some transcendental and imperishable composition; they are visible, yet not transient or in the ordinary sense material.

To turn from Zeller to the original, I think Aubrey Stewart's is the only edition of the Ethics beside the old stand-by, Sir Alexander Grant, which is specially valuable. After all, our undergraduate course covers the best part of the Ethics already. The best part not covered by it are the two books on Friendship (VIII., IX.), which include at least one passage correcting the sublime selfishness and egotism of the μεγαλοψυχος of Book IV. Different is the case with the Politics. We only take Book II. continuously and perennially; sometimes I. and VIII., sometimes IV. and VIII. also. Till lately there were no editions and commentaries better than Eaton and the very partial edition of Bolland and Lang. Now there is a mine of information and illustration. First of all, Jowett. When the master had finished Plato, the most theological of Greeks, and Thucydides, still not wholly untheological, and, at any rate, ultra-theological in his political sympathies, he turned to Aristotle. Aristotle is not theological, and Jowett therefore did the work perfunctorily and unsympathetically; still it was the best edition in English up to that time. But then came the other Baliol edition, Newman's, with a very full and careful introduction, and a very full and careful commentary on the first two books. And now we have the Cambridge-German edition of Hicks-Susemihl of the first five books—an admirable edition, leaving nothing to be desired except the second volume. The appendix on καθαρσις alone would give the book a value, though it is a παρεργον only.

And that reference brings me to the Poetics, where Ethics and Politics meet; and here there is another new and admirable book, Butcher's "Aristotle's Theory of Poetry and Fine Art," which does for the Poetics what Hicks-Susemihl does for the Politics.

There is also, not so recent, a little volume of Mr. Prickard, of New College, Oxford, very interesting, and containing some very happy illustrations; but the difficulties of Plato's "Tenth Republic"—the difficulty of grasping just what precisely is the

influence of poetry on the character, according to Plato—(does it weaken and dissipate emotion in a flood of unreal, superficial sentiment, killing true passion and real feeling? or does it strengthen emotion and feeling—to Plato's mind unwisely—at the expense of reason and calculation?)—these difficulties cannot be said to be cleared up by Mr. Prickard. He seems rather to rationalize and strengthen Plato's case against Poetry, at the expense of the natural interpretation of Plato's words.

I have been speaking of Plato *àpropos* of Aristotle's Poetics because Plato's "Tenth Republic" is on the same subject—the function of Poetry; but, to turn to Plato himself, the graduate leaves the University with the "Republic" only, and naturally wants more Plato.

I suppose he had better take the two dialogues edited by Thompson, the Master of Trinity—the Gorgias and Phædrus. They are the best remaining dialogues, and therefore he chose them. He chose them, and therefore they are now the best dialogues for us to read. Not even Jowett himself has deserved better of Plato than Thompson. His sarcastic humor, his scholarly raillery found in Socrates a kindred spirit. "He sendeth forth his ice like morsels, who shall abide his frost?" must often have been the thought of Socrates' victims also.

The Gorgias is not really about anything so artificial as rhetoric; it is about right and wrong, justice and injustice, and, with Thompson's edition, is admirable reading, both original and foot notes. It contains one of the most brilliant and paradoxical and characteristic of Platonic generalizations—the analogy between the police magistrate and the doctor, the man who cures the soul with punishment and the man who cures the body with drugs.

There is a delightful passage, too, on the real use of rhetoric ("intellectual cookery" it is called, a definition which struck Emerson as likely to stick), viz., as an engine of persuasion for inducing the criminal voluntarily to give himself up into the hands of the Scythians; and another on the reason why the sea captains of the Ægæan packet-boats observed a strictly moderate tariff, viz., they were philosophers, and quite appreciated that it was an open question whether they really served their clients' highest interests by bringing them safe to port.

The other dialogue edited by Thompson—the Phædrus—has the memorable passage on Platonic love, which is defined as the attrac-

tion of likes, not opposites, and has inspired the memorable passage of Jowett's introduction, on love not Platonic but healthier. It has also an interesting attack on the invention of writing and the consequent failure of human memory. The Egyptologist, Mr. Flinders Petrie, has lately revived this piquant paradox. It does not appear to me equal to the Gorgias, but it has a great deal that is suggestive. Its opening pages wipe out in a few ironical words the whole science of comparative mythology; people who try to discover the inner kernel of the myth of Orithyia carried off by Boreas, and of the legends of centaurs griffins and chimaeras dire, and other monstrous births, will need a great deal of spare time (says Socrates), and will spend it rather unfortunately: it takes him all his time to discover what sort of monster he is himself.

Another dialogue which will attract the Platonic graduate is the Phaedo, well edited both by Geddes and Archer Hind. The doctrine of the soul's immortality and its pre-existence is very ingenious, if not more convincing than such arguments generally are. It suggests in one place the Eastern idea that the soul is long-lived but not immortal, like the Greek gods; that it survives many bodies as a man survives many coats, but dies at last as a man leaves one coat behind him. It touches present-day spiritualism, rationalizes and accounts for church-yard ghosts, and also for the ready materialization, under the influence of mediums, of disreputable spirits who pass themselves off as our departed kin, but spell and write with a license wholly posthumous. Again, the Phaedo is the basis of the charge made by Celsus against Christianity, that it borrowed its "revelation" from Plato—its new heaven and its new earth; its vision that there shall be no more sea; its oriental imagery of precious stones and gold and silver. There is a very florid verse in the Anglican hymnal about the New Jerusalem—(and translation, I think, by Bishop Neale from St. Bernard)—

> With jasper glow thy bulwarks,
> Thy streets with emeralds blaze,
> The sardius and the topaz
> Unite in thee their rays.
>
> Thine ageless walls are bonded
> With amethyst unpriced;
> The saints build up thy fabric,
> And the corner stone is Christ.

which to Plato in the mood of the Phaedo would have seemed not unworthy and not out of keeping with the majesty of the last

two lines. In short, all the "rococo" imagery which the scoffer attributes to the imagination of a Jew or a jeweller may at least be defended as Platonic. Origen answered that it was Plato who caught echoes from a primitive revelation. The similarity in any case of thought remains unquestioned. The last chapter of the Phaedo recalls—better at least than any other passage of classical Greek—the Greek of the Gospels; there is a happy blending of pathos and restraint. That Plato, in fact, is the most Christian of Greeks is illustrated very largely in the Phaedo. Even the resurrection there anticipated is, perhaps, more like the Christian resurrection of a body of some sort, and less a resurrection of an immaterial spirit only, than the corresponding passages of the "Republic."

There are other dialogues. The Laches, on Courage, is well edited by Tatham and is interesting. Most readers will agree with Laches, not with Socrates, probably (one of the most dramatic and interesting features of the Platonic dialogues generally). The Meno, on Reminiscence and Pre-existence, is hardly so well edited, perhaps, by Mr. Stock, but is good reading. The Protagoras, better edited by Waite, but not so good reading. One finds one's self agreeing with Protagoras about political science not being a science, rather than with Socrates. The Euthydemus is the most broadly farcical of Plato's dialogues, and is most amusing. The Ion is a satirical caricature of the poet and poetry, as amusing as it is unconvincing and sophistical. The Symposium and Theaetetus are conspicuous for purple passages which can be detached from the context. The picture of the philosopher who does not know his next door neighbor, whether he be a prince or a pauper, but only that in any case he derives from Adam, and has no cause for boasting: the picture of the same philosopher cutting a much more sorry figure than his despised neighbor, as he appears before an Athenian jury, with a clever counsel on the opposite side: the picture (in the Symposium) of the early dawn after an Athenian dinner party, when all the guests are under the table except Agathon and Aristophanes and Socrates, and Socrates is proving to the other two, who are too sleepy to dissent, that the same poet can excel in tragedy and comedy—a thought which Sophocles appears to have just played with for an instant in the Antigone, and Aristophanes in some of his lyrics, but which otherwise was left for Shakespeare to verify.

And there are still all the other dialogues, most of them full of vivid pictures of life and character, and of scholarly raillery. And then the Laws, still waiting for an editor: a full picture of the

quaint ceremonial and of the ever-haunting superstitions of the early classical world; a work which gives Coulanges, in his study of ancient religion, a large portion of his evidence; a work which represents a most amazing and most Augustan attempt by Plato in his old age to galvanize into life for political purposes a defunct creed and ritual.

Of books on Plato there is Mr. Pater's, which I confess I find rather difficult reading, and Nettleship's "Remains," which is much easier and pleasanter. Of more general books on classical ethics and politics, there is Boissier's "Fin de Paganism," a study of the first five centuries; Dill's recent history of the same period in English; Lewis Campbell's book on Greek religion; and Benn's erratic but most vigorous and suggestive history of Greek philosophy.

One strange feature of both Plato's and Aristotle's systems is that they suggest evolution more or less clearly (especially Aristotle) in their theory of Nature's purpose and method in the founding of the state: (Nature winked at man's ignorance and for the hardness of his heart, permitted him at first much afterwards forbidden;) and yet they both set up strictly absolute standards of character and morals.

Plato abuses Homer and Simonides for immoralities moral enough to them of old time, and sets up false dilemmas (either Homer never said this, or he was not an inspired poet): and even Aristotle assumes that nothing more is to be learnt; that no changes in politics or morals are to come, except, perhaps, another relapse into barbarism; and yet his doctrine of the soul as the first and implicit reality of the body (as the informing principle of the body which is only its outer garment and adapts itself to the soul's growth) appears to suggest not only not finality and absoluteness of standards, but an endless vista of growth and improvement, even for the body itself: *a fortiori* for the soul.

EARLY ROMAN HISTORY.

W. DALE, M.A., ST. MARY'S.

So long as men take an interest in their own past, the study of the Latin language and the investigation of the problems of Roman History cannot cease to enter largely into any liberal scheme of education. The history of western civilization is not much older than the city of Rome. In that long story of twenty-seven centuries Rome is the central theme. From the third century B.C. to the seventeenth century A.D. the influence of Rome, either political or ecclesiastical, was paramount. Ancient civilizations merge in that of Rome: modern history begins with the protest against Rome's power. Europe before the headship of Rome; Europe under the headship of Rome; Europe since the headship of Rome—these, using Freeman's division, are the three great periods of European history. And almost inevitably the history of language has followed the history of politics. Greek, Latin and the modern languages form the historical series. The Roman power and the Latin language are the medium through which the ideas of Greece moulded the thoughts of modern Europe. And the most interesting of all the problems which the history of Rome presents is: "How was Rome enabled to become thus the great founder of modern nations and of modern civilization: the great organizer of government, of law and of religion?"

It is no wonder then that the origin of Roman power has always been a fascinating subject to the historical student, and the fact that no final solution is possible attracts an ever-renewing band of explorers. What is early Roman History, and what is the problem which it presents? When the classical student reads Polybius, Livy, Dionysius of Halicarnassus, Plutarch and other writers who have composed the early history of Rome, and begins to compare the statements which these writers make as to their authorities, he finds that the earliest contemporary writers of Roman history belong to the time of the second Punic war. The birth of Fabius Pictor, the oldest of the Roman annalists, cannot be placed earlier than B.C. 254, *i.e.*, two years subsequent to the capture of Regulus by the Carthaginians. Fabius wrote in Greek, and was evidently

a man of considerable culture. If he was the son or the grandson of the Fabius Pictor who was Consul in 269 B.C., as is probable, we can fairly conclude that we have contemporary evidence for Roman history from the early part of the third century B.C., from the third Samnite war or the war with Pyrrhus. Early Roman history is the history of the city prior to the existence of contemporary writers; the history of four centuries and a half from the traditional date of the founding of the city.

Now, what do we find from our authorities to be the condition of Rome in the early part of the third century B.C., when contemporary and so far credible evidence for her history begins? Is it not briefly this? She is the ruler of Italy from the Apennines to the Straits of Messina. Within her own walls the great contest between patricians and plebeians has ended in the equalization of the orders. The citizen body—*civitas Romana*—includes the southern part of Etruria, Latium, Sabinum and Northern Campania. In form her government is a pure democracy of the best type (read Arist. Pol. ch. iv., bk. vii., The population lives by agriculture: a population not possessing great wealth, occupying itself with business and not taking too great an interest in politics, like the urban population of a Greek city. It does not (cannot) seek office as a means of livelihood or to enrich itself by the spoliation of the wealthy. It is content, because it enjoys the power of electing its magistrates and holding them to account for their conduct in office. It is under the guidance of a patriotic, if somewhat narrow aristocracy.) Rome has apparently surmounted successfully all the difficult political problems which the ancient city state presented. She has founded an empire without losing her own individuality. She has solved the difficult problem of political disability. She has extended and at the same time strengthened her *civitas*. She has laid the foundation of a power the most extensive in history—not the most extensive in point of area or in point of numbers: for several modern empires surpass Rome in both respects—but the most extended in comparative influence. No other power has been able to claim the same proud title as Rome of *domina rerum* —"mistress of the world." It is worth our while to try to form as accurate an idea as is possible of the state of things at the beginning of the Punic wars, for the result of those wars proves that the foundations of Rome's power had been strongly and securely laid. Imperceptibly *velut arbor aevo* during the century from 366 —the passing of the Licinian Rogations—to the subjugation of Italy

in 266, the city had extended her sway from her own walls to the boundaries of Italy. That century is the golden age of Rome, but it had no *vates sacer*. Every year, and several times a year, the Roman citizens, farmers for the most part and proprietors of their own farms, met to elect magistrates, to pass *leges* and *plebiscita*, to hold the annual levy of legions, and to vote declarations of wars—for wars are continuous. There is as yet no glaring inequality in the distribution of wealth, the distinction between *locuples* and tenuis is hardly felt, the poor man is able to become consul and censor—as the examples of Curius, Fabricius and Coruncanius seem to show—the citizens vote and fight, and follow their natural leaders, men of wisdom and experience, while faction is apparently unknown, unless it be in the case of aristocratic reformers like Appius Claudius Caecus the great censor of 321. There are disasters, but there must have been victories during that notable century. There are instances of bad faith, of cruelty and treachery according to our modern ideas. But on the whole, the work of that century was a great work and nobly and manfully done—and no one has left us the history of it. The leaders of Rome during that century could probably read a little, write a little and speak a little. But they were emphatically men of action; they were an aristocracy of farmers who did not read books, much less make them. Such briefly was Rome when contemporary history began. Now, the problem of early Roman history is to explain, if it can, this remarkable state of affairs. If the problem can be solved, it is certainly worth while to attempt it. Even a partial solution is better than contemptuous neglect.

The work of the historical student consists of two well-defined parts. He must first criticise and determine the authorities for any given period. Having performed this preliminary and indispensable task, he must in the second place proceed to determine, to classify and interpret the facts which he gains from his authorities. When the modern scientific historian approaches the question of early Roman history, he at once concludes that there is no authority for the period preceding the third century, and proceeds forthwith to pass a strong censure upon the method of constructing history out of the imagination after the plan of Mommsen and Curtius. But the problem cannot be shelved in this conclusive manner, if history is to do anything more than register facts. The mind refuses to accept as a satisfactory account of early Roman history, the statement that in the beginning of the

third century we find Rome under a republican form of government, at the head of Italy which consisted of citizens possessing different degrees of privileges—cives, Latini, socii and that the so-called history of the preceding four and a half centuries is a confused mass of myth, legend, tradition and fiction from which no trustworthy knowledge can be gained.

Traditional history, *i.e.*, the history as delivered to us by such writers as Livy and Dionysius, tells us that Rome was first governed by seven kings of whom the first was Romulus, the founder of the city; that on the expulsion of the last king a republic was established and placed under the government of two annual consuls. Thereupon the governing class began to oppress the lower class of citizens who carried on a long struggle for admission to the full rights of citizenship, a struggle ultimately crowned with complete success. After the union of the classes the strength of the State was such that in a single generation Rome was practically the mistress of Italy. We know the last fact, because it brings us to contemporary history. Do we equally know the other facts, the existence of the monarchy, the long struggle between patricians and plebeians, the story of the conquest of Italy? I would say in the first place, that looking at the history of antiquity generally the story is a very probable one in its general outlines. The history of the city state of antiquity presents in all cases many points of similarity. Monarchy, aristocracy, tyranny, popular government, the struggle of the privileged and unprivileged classes are met with everywhere in the Græco-Roman world in the sixth and seventh centuries B.C. The instinct of the Romans led them to discard the monarch while retaining the best features of kingship; to avoid tyranny perhaps altogether; to temper the narrowness of oligarchical rule by the admission of democratic features of government. It was because Rome solved the difficult question of the extension of citizenship that she alone of all the cities of antiquities survived as a governing city. The general history therefore of the city states of antiquity as compared with the history of Rome makes the traditional history very probable in its main features. Again, the general features of the story are proved by survivals in language, in customs and in institutions. The Romans were the most conservative of peoples, and the government of Rome was a continuous and unbroken government. They abolished monarchy. But they preserved the interrex, the rex sacrorum and the præfectus urbi, which tell us unmistakably that Rome at first was

governed by kings. The comitia curiata fell into disuse. But the lex curiata de imperio continued on into the Empire to witness to the primitive assembly of the people by curiæ; to witness to the high antiquity of the principle of group-voting in Rome.

But when we turn from the general considerations based upon the history of antiquity and the survivals of language and institutions to the personal details of the traditional history, we are at once confronted by a more difficult question, viz., from what sources did the annalists who are the authorities for our extant histories and whose works are almost entirely lost, draw their materials for early Roman history. On investigation we find the sources of that history are either (1) monumenta publica, or (2) monumenta privata —adopting the division from the well-known passage in Livy vi. 1 —a passage which has not been, perhaps, considered carefully enough: Etiamsi quae in commentariis pontificum aliisque publicis privatisque erant monumentis, incensa urbe pleraeque interiere. . . . In primis foedera ac leges—erant autem eae duodecim tabulae et quaedam regiae leges,—conquiri quae compareren del jusserunt (sc. tr. mil.) It would seem that the "*foedera ac leges*" were something different from the *publica privataque monumenta*. At any rate from the very necessity of the case, treaties and laws (both leges and plebiscita) formed a special class of public documents.

Now let me try to make clear what the question as to the evidence on which the history of the two first centuries of the Republic rests really is. The annalists on whom Livy, Dionysius, etc., depend, and who are contemporary witnesses—say, from the wars against Pyrrhus—are lost. The question as to the evidence then is how far was the annalistic history previous to the wars against Pyrrhus based upon contemporary documents, *i.e.*, how far can *we* prove to our own satisfaction that their narrative has a credible, or any credible foundation? (1) It is almost demonstrably certain that the *annales Maximi*, *i.e.*, of the Pontifex maximus, recording year after year the principal events along with the names of the magistrates of the year, reach back to 350 B.C., at least a date which takes us back almost to the Licinian Rogations. But further these pontifical annals or books were manifestly suggested by the register of the magistrates. (2) Now, the list of magistrates which goes farthest back and which was accessible to the earliest annalists and is still indirectly accessible to us, seems to have come from the archives of the Capitoline temple, which was not burnt by the

Gauls in 390 B.C. This list, the famous Fasti Capitolini, records the names of the chief magistrates of the city from 509 B.C. onwards. It also notices under the year B.C. 463 the famous vow of driving the nail every hundredth year into the wall of the Capitoline temple. (3) But this date, 463 B.C., is proved by the still earlier monthly calendar of festivals and court days which was kept by the pontifices apparently from the time of the monarchy. Both these lists, the monthly list of festivals and court days and the annual list of magistrates, were called *Fasti*. "That the list of presidents which we now have—although in collateral matters, and especially in genealogical statements it has been supplemented from privata documenta—is in substance based on contemporary and credible records admits of no doubt. But it reproduces the list of calendar years imperfectly. For when the pontifices began to adjust a pair of consuls to each year it was found that there were not names enough. Why? Because the consuls did not enter upon office on the same day of the year and the *interregna* that frequently occurred were entirely omitted in reckoning by official years. Hence where the list of magistrates did not suffice, intercalary years were inserted, denoted in the later Varronian tables by the figures 379, 383, 421, 430, 445, 453.

Hence that remarkable assertion in reference to the years 375-371 B.C., that the city had no magistrates. But from 463 B.C. the list demonstrably—not perhaps in detail but on the whole—coincides with the Roman calendar, and is thus chronologically certain, so far as the defective condition of the calendar itself allows. The forty-seven years preceding that date cannot be checked, but must in the main be correct also, although the number of years between the expulsion of the Kings and the Gallic conflagration may have been rounded off to 120 years, as the length of the monarchy was rounded off to 240 years. Beyond 509 B.C. there is no definite chronological data ascertainable in Roman history. We thus get contemporary evidence—meagre it is true—with fixed dates almost up to the foundation of the Republic. Is there any evidence older than that, though it cannot be dated? (4) You will remember those two well-known chapters in the first book of Mommsen on Religion and on Law and Justice under the Monarchy. What evidence have we that such a condition of things existed prior to the foundation of the Republic? The first of those chapters, that on Religion, is based upon the old Roman monthly calendar with its list of Roman festivals and court days already mentioned—evidently the oldest

document of the Roman community. Many of these festivals reach back perhaps to days prior even to the priestly monarchy—to days before the clans formed a community—to a time of immemorial antiquity, but of course we cannot give any more definite date. But we shall not for that reason reject it as unhistorical. The second chapter—on Law and Justice—is based upon the Law of the XII Tables—a document dating from 450 B.C., of which there are still authentic remains, although considerably modernized in spelling. Now these laws, like all early laws, were the practices and customs of a great antiquity reduced to a written code, and therefore Mommsen is quite right—notwithstanding the censure of the hyperscientific—in referring them to the time of the Monarchy. I say nothing here as to the philological and archæological evidence which leads us back to the times of the Monarchy. We thus possess a certain amount of irrefragable testimony as far back as the times of the Kings. I have now to deal with the privata monumenta—the source of so much that is untrustworthy in the details of the early history of the Republic. The principal private archives were connected with the *jus imaginum*, that great source of human pride—the pride of ancestry, based, it is true, on great deeds and nourished as it has never been nourished by any other race in history. The noble houses—which became "noti magis quam nobiles" (Sen.), had the right of adorning the atrium with waxen busts of ancestors. These cereae imagines were furnished with tituli beneath. These tituli were inscriptions stating the relationship, the offices held and the deeds done by the person whom the waxen bust or mask represented. These *tituli* which Livy so frequently qualifies as *falsi*, were the source of invented pedigrees (stemmata), of funeral panegyrics, of imaginary consulships and of fictitious triumphs, which in the absence of contemporary literature became incorporated with the history of the state. Add to this that the annalists of the times of the Gracchi and of Sulla imported into early Roman History the political and economic controversies of their own times and we have the two great sources of error in the history of the first two centuries of the Republic, viz., family tradition and political partisanship. A good example of the difference between family history and annalistic history is furnished by the epitaph of L. Cornelius Scipio, Consul, 298, one of the oldest monuments of the language:

> "Cornelius Lucius Scipio Barbatus,
> Gnaivod patre prognatus fortis vir sapiensque
> Quoius fama virtutei parisuma fuit.

Consul censor aidilis quei fuit apud vos
Taurasia Cisauna Samnio cepit,
Subigit omne Loucanam opsidesque abdoucit.

If we compare this with the narrative in Liv. x. 12, we find that Scipio commanded in Etruria, and not in Samnium, which was the province of his colleague, Cn. Fulvius; that no mention at all is made of Taurasia and Cisauna either by Livy or any one else; that in that year a treaty of alliance was made with the Lucanians, who, as a pledge of fidelity, did send hostages to Rome. Thus either Livy has been misled by his authority, or the epitaph is a perverted and exaggerated account of the acts of Scipio.

It has been said, and I think rightly, that the history of the constitution has been delivered in a more reliable form than the history of civil events. In the first place there were the actual institutions in the city. Neither the senate nor the tribunes were likely to forget the Lex Sacrata or the Lex Publilia or the Lex Terentilia or the Lex Valeria Horatia or the Lex Canuleia. Nor, again is it likely that the term of the Latin Treaty or the Hernican Treaty would be forgotten by the Senate, and if they were forgotten in Rome, copies of them would be procurable in some Latin or Hernican town. Now, Livy expressly says in the quoted passage that one of the first duties of the military tribunes of 389 was to recover the treaties and laws which had been destroyed by the Gallic fire in 390. Doubtless they were successful to a considerable extent, and therefore I think that the contention is a sound one, viz., that the main facts relating to the great constitutional struggle stand on a firm basis, and that we have on the whole a reliable account of that great struggle. Such, in very brief outline, are our authorities for early Roman History.

(1). Foedera and leges. (2) The Calendar and the Fasti. (3) The Annales Maximi. (4) The Tituli and Laudationes. Now such being our authorities, and leaving out of sight entirely the monarchical period, except as already mentioned, what is the character of the facts which we gain from these authorities? The internal history of Rome during that period is divisible into two clearly distinguishable portions: (1) The border wars and feuds down to the expulsion of the Gauls—a period of a century and a half—a series of events full of exaggeration and fiction. (2) The great wars leading to the conquest of Italy and beginning with the first Samnite war in 343, a series of wars, the history of which is based upon the Annales Maximi, which begin just about this period; a history

which becomes more and more credible as we approach the time of of Pyrrhus. The internal history of Rome during the same period is marked by three revolutions: (1) The expulsion of the Kings. (2) The establishment of the tribunate. (3) The enactment of the Licinian Rogations. Each of these great changes was marked by the addition of a day to the great national festival, the Ludi Maximi, which originally limited to one day is at the beginning of contemporary history prolonged to four days. By the first revolution was established that power of the Roman aristocracy which lasted down to the battle of Pharsalia. Did a Roman noble desert the cause of his class and attempt to work for the good of the whole community, he was at once accused of aiming at regal power and promptly put to death. The entire history of the republic exhibits a strongly aristocratic bias throughout; the equalization of the orders and the division of the supreme power amongst several magistracies only increased the power of the senate—the organ of aristocratic rule—and for that work of conquest which the republic was destined to accomplish no better organ of government could have been found.

The establishment of the tribunate and its results show us what is one of the most extraordinary sights in history. Within the same city walls we have presented to us two organized communities—a patrician community, with its consuls and quæstors; a plebeian community with its tribunes and aediles, each with its legislative organ; the laws of the patrician assembly being binding on the whole community; the laws of the plebeian assembly requiring the consent of the patrician senate, but as an offset to this, the tribunes of the plebeians possessed the constitutional power of veto, *i.e.*, of putting a stop to any official act of patrician magistrate or senate. Why such a condition of affairs does not bring destruction upon the community, but on the contrary works out into a very practical and effective government—one of the most effective in history, indeed—is well worth serious study.

From whatever point of view we study Roman history it presents a continuous and logical development from principles of immemorial antiquity, which are all clearly traceable in this early period. Take the point of view of the senate—of the nobles, where can you find such a consistent and continuous policy, and such a magnificent series of conquests? Study it from the social standpoint and where can we find such a series of conservative political compromises from the time of exclusive patricianism to the social

war; from the social war to the edict of Caracalla? Study it from the economic standpoint, you will find that the history of Rome turns upon its agrarian legislation from the time of Sp. Cassius to the time of Cæsar. What is meant really by the economic and agrarian struggles of the first two centuries of the republic; by the laws fixing and even abolishing the rate of interest? It is impossible here to go into the question of the origin of the clients and plebeians, to examine what is meant by the continual debts which seem to overwhelm the poorer citizens. But this much may be said: The debts of which we hear so much were not loans of money but rents (probably in kind) for land and for advances in kind for seed and implements. If this be so, it makes more intelligible the laws fixing the rate of interest, deducting the interest from the principal and even abolishing interest altogether. Hence arose the agitation for agrarian laws, as an escape from a condition of perpetual debt and serfdom. The question was never fully solved. The great career opened to the community by the conquest of Italy and then by the conquest of the Mediterranean lands put the question to sleep until it was reawakened by the Gracchi.

GRADUATES' READING-LITERATURE.

W. J. ALEXANDER, B.A., PH.D., TORONTO.

It is an extremely easy thing to give good advice of a vague and general character; to follow it is another matter. I judge that the members of the classical association have a sufficient believe to read, and are not much at a loss in regard to what they ought and what they wish to read. The real difficulty is lack of time and energy. After teaching five hours in school, and correcting exercises and examination papers besides, there is a need of something other than good advice to enable the members of this Association to read to the best advantage.

There is another obstacle in the way of my paper being of real service to you. Good advice, provided that it is of a general character, is, as I have already said, very easy to give; it is also extremely obvious—deals in platitudes of the most hackneyed kind. Minute rules, on the other hand, are mainly determined by individual conditions and local circumstances, and what is pertinent to one case is quite inapplicable to another. Directions for reading are something like methods in teaching. In both cases we are in the regions of the practical where success depends chiefly on skilful adjustment to an immense number of temporary and local details, which no methods and no general directions can anticipate or take into account. I am afraid that I have not succeeded in overcoming these defects of my subject, and that what I have to say will prove either too patent or but little applicable.

The special sphere assigned to me in this series of papers on the Classical Graduates' Reading is wider than either of those that follow, and, further, the sphere in which reading is most likely to be done. It is wider, not merely because it might be taken to embrace both the departments assigned to the succeeding papers, viz., History, and Ethics and Politics, but because, while all reading done in these departments will be undertaken with a serious aim, reading in literature proper includes reading for mere pastime, for recreation, and for amusement.

I will take up the last-mentioned sort of reading first, as by no means the least important; for in the case of busy men like

yourselves, whose profession occupies you with books, it is likely that a large part of your reading (outside that required by your daily work) will be of this character.

The reading, then, which we have first to consider, we must take for granted, is done at a time when intellectual energy is at the ebb, when there is an absolute need of refreshment and a relaxing of mental tension. It does not follow, however, that this reading should be merely a pastime—be purely negative in its results—much less be positively injurious. Novels, for example, are supposed to be the easiest of all kinds of reading, and to them we most naturally resort when we need rest and refreshment; and, in truth, the complete oblivion which an interesting novel brings about, of ourselves, our affairs and our worries, the mental transference into a new and interesting scene, and the universal accessibility of this form of amusement, its independence of places, persons, and conditions such as hamper most other pleasures, give novel-reading a first place among recreations. But though novels are supposed to be written for pastime and delight, all men do not find all novels entertaining. Tennyson, who seems to have been very catholic in his taste, found that, in his own words, "To read some novels was like wading through glue." Now, unfortunately, this glueyness of novels for very many people is in exact proportion to their excellence. They can only read Scott or Thackeray or George Eliot from a sense of duty, and with much expenditure of will-power. Hence these books are shut out from their hours of mere recreation and relegated to that more serious reading, of which I shall presently have to speak. But the dullness does not really exist in the novels themselves, but in these readers. It is not needful that a novel, in order that it may be a recreation simply, should be of inferior quality. If there is such limitation in the case of anyone, the fault is *his*, and does not lie in the eternal constitution of things. It is because his taste has been formed by reading poor novels; for example, by reading the novels people talk about as they come out—one of the commonest and worst methods of novel reading. Our tastes are formed by our diet. I once recommended to an old farmer, whose garden was planted with turnips and cabbages, and whose table corresponded, some of the more modern and delicate vegetables to afford variety; but none of these, he told me, pleased his palate. In the days of his youth cabbages and turnips were alone obtainable, and habit had

fixed forever on a low level and within narrow limits his gustatory delights. In our leisure moments we may, without undue effort, gradually improve our taste. If the best be as yet too strong meat, let us read the better; thus in time it will come about that the best will be read with as little effort as the worst, will give positive, not merely negative, satisfaction, will widen our insight into life and character, will afford us pleasure from the preception of intellectual power, realistic truth, artistic skill and grace—delights which inferior works cannot yield, because lacking in the qualities which give rise to them. My first piece of advice, then, is, not to read every novel that comes to hand, and to read no trash; choose the sort of story that pleases you, but let it be by one of the better writers.

But novels need not be our only literary resource when we are weary. Poetry affords a higher and keener delight, and is even more stimulating and refreshing. Really good poetry is, I admit, the most exacting of all kinds of literature, requires an adjustment of the emotional nature, and a play of intellect such as no other form of literature demands; but that hindrance exists only until we have become thoroughly familiar with the particular poem upon which we are engaged. There is, on the other hand, no sense of effort in conning over some favorite and familiar passage. One merit that great poetry has over other forms of literature is, that it never grows stale or palls. Like a meerschaum pipe (I think the comparison is Holmes's), it gains depth and color and beauty on each occasion we use it; it becomes a centre of pleasant associations; the pleasure of the thing itself is intensified by vague memories of the delight that it has yielded in the past. Hence the value of having a wide and familiar range of poetic reading. The earlier this familiar acquaintanceship is made, the better; for experience certainly shows that men's tastes, especially in æsthetic matters, is eminently conservative, that, with most men they are definitely formed at a comparatively early period. The time comes when it is impossible to widen the field of poetic enjoyment, when the beauty of what is unfamiliar must remain forever hidden. My second rule, therefore, is, familiarize yourself with a wide range of good poetry.

Let us now pass from reading which is merely an amusement, to reading which, while it may, and probably does, afford pleasure, has yet some ulterior purpose, reading to which you devote yourselves when you have energy to spare. Here I will again make a two-

fold subdivision—periodical literature, and what, in comparison, at least, may be called permanent literature.

First, periodical literature. The amount of periodical literature being produced at the present time, its variety, attractiveness, accessibility, are unparalleled in the annals of any preceding period, and I believe that most people (naturally enough) spend a disproportionate amount of time upon it. But to make periodical literature our main mental pabulum is objectionable for three reasons in particular. First, such reading must then of necessity be fragmentary and unorganized, and little likely to have a permanent hold upon the mind. You have, perhaps, read in your time a Sunday newspaper. I do not mean the baser sort, but such a paper as the New York *Sunday Tribune*, and have noticed how little impression the matter, though much of it may have possessed real merit and interest, has left upon the mind. In the same way, all desultory reading is, to a greater or less degree, ineffective. The second objection to periodical literature is, that it is apt to occupy the mind to an excessive extent with matters of transitory interest—things that loom up with seeming importance for the time, presently to vanish through their manifest insignificance—with trivial themes, treated without literary power. There is, for example, a fashion among magazines for dealing with such subjects as: "How wood engravings are made," "How a newspaper is printed," "How beer is brewed," and so forth, which, doubtless, may have value for certain readers, but for most people such reading is the mere killing of time. In the third place, periodical literature is objectionable because we have not the sure indications which we possess in more permanent literature, of what is worth being read and what is not. We have less means of judging beforehand whether something is or is not worth reading, and are often forced to say at the end of the article, "There is nothing in it."

Periodical literature should be read that we may know what men at the present time are doing and thinking. For that purpose we should read one or, perhaps, two newspapers. A judicious method will usually enable us to do this at a very small expenditure of time; it will scarcely take longer to read two papers than one. Further, a good weekly, which keeps us abreast of what is going on in politics, thought, and literature, is almost a necessity for the intelligent and cultivated man. As for the monthlies and quarterlies, a glance through a reading-room ought to enable each

man to select the one or two articles a month which it is really expedient for him to read. My own opinion is, that the best articles on weightier topics are usually to be found in the old-fashioned quarterlies. The anonymous writers of these can gain attention only through excellence of thought and treatment; the shorter articles of more frequent reviews often seem to depend rather on the immediate interest of the topic selected, or the attraction of the name by which it is signed. My third piece of advice is, see that you do not spend time uselessly or unduly on transient at the expense of permanent literature.

Let us now pass to the most important part of our subject—the serious reading of the comparatively permanent literature contained in books. "It is the great principle in all serious reading," says one whose words should have special weight in this Association, the late master of Balliol—"It is the great principle in all serious reading to stick to the works of great writers." We should first of all in our purely literary reading read the best, and not merely read it, but thoroughly assimilate it. What other difference so fundamental, as far as reading goes, between the truly educated man and the half educated, as that the man of true culture knows and reads the best; the man of imperfect culture neither knows the difference between greatness and mediocrity nor regards it in his reading. I suppose each of you have actually met some intelligent but imperfectly educated artizan, let us say, who has a real interest for some science or some subject, but half wasted his time on exploded text-books and obsolete theories. In such a case the folly is more patent, but it is not greater, and certainly not nearly as common, as the disproportionate attention given by the majority of readers to second-rate or third-rate literature, at the expense of literature of the highest order. One great reason of this is the disproportionate space in the field of mental vision naturally occupied by what is just appearing, and by what belongs to our own time. In literature, we should be careful first of all to be in touch with the finest expression of the finest minds. And while doubtless good or even great books are being produced in our own day, all the past shows that there must be a very small proportion. If any one who has attained to middle life, will reflect on the great number of books which, in his own experience, have been much talked of and widely admired, but have soon sunk into merited oblivion, he will be able to realize this truth.

Let me illustrate. Consider, for example, the single department

of poetry. There is every year a large amount of poetry published; in regard to this annual harvest we are sure, on the principle of averages, that but a small part has great excellence, that probably none of it is of the highest order. Is it worth while to wade through the whole mass for the sake of a possible residuum? especially since a large part of this cannot be dismissed upon cursory inspection. It is this merely cursory inspection that has led the critics into such monstrous blunders. Every one knows when he comes to the study of a new poem, of whose excellence he knows beforehand how much of intellectual and emotional effort is required in order adequately to appreciate it, how vague and inadequate our first impressions are, and how gradually its real power grows upon us. If we are to discover the possible fraction of excellent work in the yearly production of poetry, this same time and energy must inevitably be devoted in the main to poetry which will never repay the effort. We are doing this, too, when there is already at command a large store of poetry of the highest order whose excellence is sufficiently attested—a store so extensive as probably to be beyond our mastery. For most people it is wiser to leave the work of discovering new stars in the literary firmament to the professed critics, and to time, and to devote themselves to the acknowledged classics. What is true of poetry is true in less measure of all departments of literature.

In regard to the books of our own time, not only are we less able to discriminate which is truly great, but the point of view and the insight given by the literature of the past is more needful for real culture. The essential difference between the man who has true culture and the man who lacks it, is surely that the latter is limited in his understanding, grasp and appreciation of things by the narrowness of his knowledge and experience. Now, the ideas and ways of looking at things presented by the writers of our own time, are more likely to become ours without effort, to be breathed in, as it were, from the intellectual atmosphere of the age, than the conceptions contained in the literature of the past. Our voluntary efforts should, therefore, be directed, by preference, to familiarizing our minds with what does not belong characteristically to our own time. There is a self-complacency, a self-conceit, a bigotry and narrowness in each generation, which can be overcome only by special effort. There are people in every age, plenty of them in our own, who make the superiority of their own times and the

unworthiness of the past into a principle, and act upon it. This is the essence of Philistinism. How absurd a figure does this class present to our eyes in the last century; in the eyes of posterity the same class in our own time will appear not less ridiculous. In the sphere of literature how many people unconsciously and unintentionally allow their tastes to be narrowed down to the limits of the nineteenth century, or even to some part of it! I have met many, for example, who have a real appreciation of the poetry of Tennyson, and of scarcely any poetry besides. Their capacity for poetic enjoyment is sufficietly attested by their caring for one great poet; and their narrowed taste and perverted judgment is simply the result of a confined range of reading. It is a matter of astonishment, further, how many, whose appreciation is not thus limited, are yet ignorant of much that is best in English literature. How many people of liberal culture are not familiar with, perhaps have not even read, many of the acknowledged masterpieces of our language! After so much vague generalization, let us lay down something definite, yet, I think, indisputable: every man who professes to possess literary culture should not merely have read but should have permeated his mind with all but a very few of the plays of Shakespeare, with the Bacon's essays (the greatest prose book, probably, by an English writer), with the Bible in the version of 1611, with nearly all Milton's earlier poems and a large portion of "Paradise Lost"; he should be familiar with Bunyan's best works, with Swift's, with Goldsmith's, with Boswell's Johnson (perhaps the most permanently entertaining and delightful piece of prose in the English language), and with Burke's greater speeches and tracts. In short, my fourth rule is, read, by preference, the great masterpieces of literature, and read them all and read them often.

So much of indication as to *what* to read; now a word or two—for I have well-nigh exhausted my time—as to *how* to read. In later youth, when the mind is rapidly growing to maturity, the active-minded boy with literary proclivities reads in the most miscellaneous fashion, browsing here and there, and passing from one book to another, finding everywhere things which delight, which gratify his wholesome curiosity; he thus lays the foundations—which, it seems to me, are at this period laid, if ever—of general information and wide interest that belong to the man of broad culture. But the older we grow, and the shorter the time

before us becomes, the more needful is it to find some definite aim, some connecting thread of interest in our reading. It is well that we should find and feel some plan, some underlying bond of connection.

This does not mean the limiting of our reading unduly. All knowledge and all interests are bound together, and a sufficient number of links will enable us to get a long way from a centre and still maintain the connection. The most natural centre for people in our profession is our own daily work; and the student of classical literature especially can easily find in imitations of classical authors, influences, analogies, contrasts, differences, abundant schemes for reading in English.

For the study of literature as literature, the best plan is first to read the greatest works of a writer, and when you have thus become interested in him and grasped his significance, to pursue a chronological study of his work in connection with his life. Again, it is better (and this is true, I think, especially of your classical reading) to read one author at a time, become thoroughly familiar with his thought and style, rather than to skip from writer to writer. This holds particularly of Greek literature, where the vocabularies of different departments vary so markedly. The familiarity gained by keeping to one author or department enables you to economize time and effort.

For a more extended study of literature, an analogous plan should be adopted to that recommended for the study of a single writer, *i.e.*, become acquainted first with the great writers of a period, and proceed from them to a study of the minor writers, following the development of the special tendencies of the period exhibited in the greatest geniuses through the works of smaller men. It is only in this way that we can get the real value of the study of second-rate and obscure books.

In reading, the first thing is to appreciate the general spirit and force of a book. It is a mistake, therefore, to attempt an exhaustive study of details before one is familiar with the whole. To illustrate what I mean: It is wiser, first of all, to read and enjoy a play of Shakespeare as a unit—to read it as one would read an easy piece of literature of our own time. Difficulties, obscurities, the consultation of notes, etc., should come later.

In conclusion, I think a word of warning may not be out of place. To be engaged in reading is not necessarily to be well

or sensibly employed. That is a superstition from a time when reading was a rarer accomplishment than now. The old dames used to think Johnny should not be disturbed if he were at his book. One may be reading to no good purpose, or one may read too much. Often men, like ourselves, whose daily business is with books, would be better employed in seeing something of our fellow men, in cultivating some scientific hobby, in some active employment which takes us out of the world of books into the world of nature and of actual life.

MATHEMATICAL AND PHYSICAL SECTION.

THE MATHEMATICS OF THE MINUS SIGN.

W. J. Patterson, M.A., Carleton Place.

It has been my custom, in common, no doubt, with many teachers of mathematics, to attempt to assign positive interpretations to negative results in the solution of problems involving quadratic equations. The effort has proved pleasant as well as profitable.

In order to make clear my point of view, let us examine a few simple cases.

A merchant bought some pieces of silk for $900. Had he bought three pieces more for the same sum, he would have paid $15.00 less for each piece. How many pieces did he buy?

Solving the problem by means of the quadratic equation, we obtain the result 12, or -15. What interpretation shall we assign to the negative result. Evidently this: Reverse the reading of the problem and 15 is the answer. Our problem now reads: A merchant bought a certain number of pieces of silk for $900. Had he bought three pieces *less* for the same money, he would have paid $15.00 *more* for each piece.

Let the problem be to find how many terms of the series 17, 19, 21..... must be taken to give the sum 132. Solving by means of the quadratic equation, we obtain the result 6, or -22. How shall we interpret the negative result? As before, we must reverse the reading of our problem. It must now be read: How many terms of the series -17, -15, -13..... must be taken to give the sum 132? The answer is now 22.

From the above consideration we see that a negative result may be regarded as a positive answer to a problem obtained from that under consideration, by reversing certain operations or relations involved in the statement of the problem.

Assuming the directional interpretation of the symbol $\sqrt{-1}$, fundamental in the science of quaternions, let us now examine the case of a secant line to a circle moving parallel to itself, until it ceases to cut the the circle. Take the equation $x^2+y^2=a^2$. Solving y, we obtain $y=\pm\sqrt{a^2-x^2}$. These values of y are *real* until x is numerically *greater* than a, when $y=\pm i\sqrt{x^2-a^2}$. Now take the rectangular hyperbola $x^2-y^2=a^2$. Solving y, we obtain $y=\pm\sqrt{x^2-a^2}$, which are *real*, until

x is numerically *less* than a. From these considerations, we may interpret the symbol i to mean in this case, that, when the secant line leaves the circle, the locus of its points of imaginary intersection with the circle, is the rectangular hyperbola, concentric and coaxal with the circle. The symbol i, as an operator applied twice, changes the sign of y, and transforms the equation of the circle into that of the rectangular hyperbola, and *vice versa*.

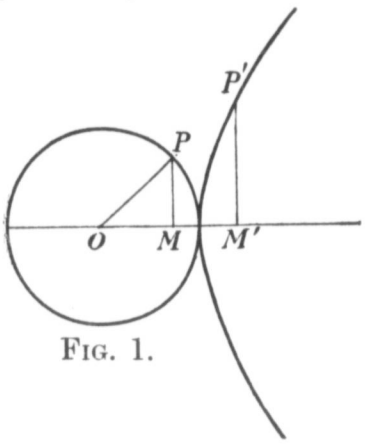

FIG. 1.

Some very interesting results follow from this mode of treating curves. I shall, for the sake of convenience, call a pair of curves related in the same way as the circle and rectangular hyperbola, a pair of complementary curves. Examining the ellipse in a similar way, we find its complement to be the concentric and equiaxal oblique hyperbola. This result is quite general, for the ellipse may be referred to a pair of conjugate diameters as axes, and the line considered moving parallel to the Y axis. Generally, the complement to a closed curve or loop is an open or infinite curve, and *vice versa*. The complement of the parabola is an equal and coaxal parabola, opening in the opposite direction. The ordinary parabola occupies a unique position among the curves belonging alike to both open and closed curves, since its infinite branches, being ultimately parallel, may be supposed to meet at infinity. Complementary curves are reciprocally related; either being given, the other may be determined from it by a simple process. The exact nature of that process will become more apparent as we proceed.

FIG. 2.

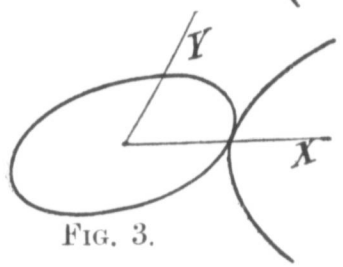

FIG. 3.

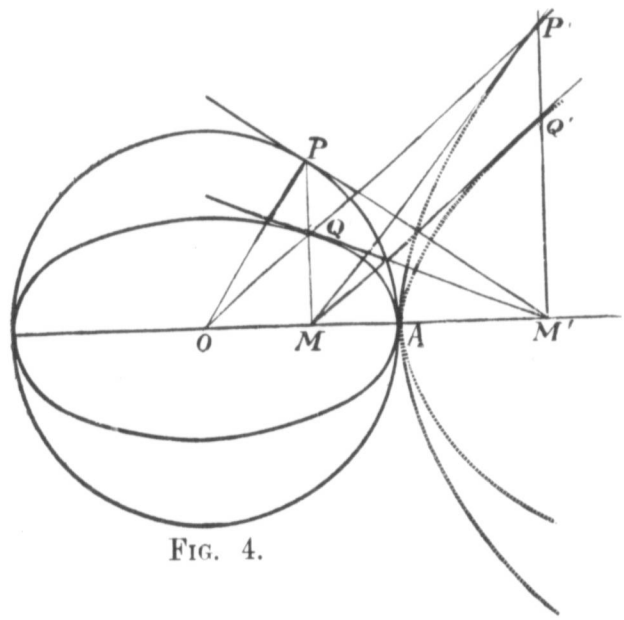

FIG. 4.

I propose now to make some applications, and to examine some consequences of this duality of curves.

Let us briefly consider hyperbolic functions. Let $P\,Q\,M$ be an ordinate to the circle and its concentric and coaxal ellipse. Let the tangent at P cut the X axis at M' and let $P'\,Q'\,M'$ be the corresponding ordinate to the complementary hyperbolas. Now $PM' = P'\,M' = \sqrt{OM'^2 - a^2}$. Let the angle $P\,O\,M$ be θ, then the angle $P'\,O\,M'$ is $i\theta$. Sin $\theta = \frac{PM}{a}$, sinh $\theta = \frac{P'M'}{a} = \frac{PM'}{a} = \tan\theta$; cos $\theta = \frac{OM}{a}$, cosh $\theta = \frac{OM'}{a} = \frac{a^2}{a.OM} = \frac{a}{OM}$ $= \sec\theta$. Hence $\cosh^2\theta - \sinh^2\theta = 1$.

Again, sinh $i\theta = \tan i\theta = \frac{P'M'}{OM'} = \frac{PM'}{OM'} = i \sin\theta$, since the ordinate of the hyperbola, considered in reference to the circle, the prime curve, has the symbol i implicit in it. This is further illustrated in the fact that sin $h\theta$ becomes tan θ, involving a change of direction of the ordinate in reference to the rotating radius of the circle. The symbol i as used here indicates that when θ is the circular vectorial angle, $i\theta$ is the corresponding hyperbolic vectorial angle and *vice versa*. The two values of θ are not equal but only correlated in the way indicated above. We are now in a position to understand the connection of the forms e^{θ} and $e^{i\theta}$, for if e^{θ} is hyperbolic, $e^{i\theta}$ is circular and *vice versa*. But e^{θ} is the well-known hyperbolic function fundamental in the expression for the area of a hyperbolic sector. Hence $ei\theta$ bears a corresponding relation to circular functions.

We may now ask: "Is this interpretation of the symbol i consistent with our earlier interpretation?" Let us examine. Referring to our diagram (fig. 4) we see that, as the circular ordinate $P\,M$ moves out from O, the centre of the circle, the radius $O\,P$ gradually assumes the position $O\,A$, and, in the instant when $P\,M$ leaves the circle and becomes an ordinate of the hyperbola, it becomes perpendicular to $O\,P$ and remains perpendicular to it, as long as $P\,M$ is an ordinate to the hyperbola. This is further evident from the following consideration. We may interpret the triangle $O\,P\,M'$ to mean that the ordinate $P\,M$ refuses to leave the circle, and, as above indicated, assumes a new directional relation, viz., at right angles to the radius of the circle. When we examine the condition for asymptotes to a circle we shall find additional justification of this interpretation.

Let us now examine the circle and ellipse for asymptotes. The condition for asymptotes to the circle $x^2 + y^5 = a^2$ is $x^2 + y^2 = 0$ or $(x + iy)$ $(x - iy) = 0$. The condition for asymptotes to the complementary hyperbola $x^2 - y^2 = a^2$ is $x^2 - y^2 = 0$, or $(x + y)$ $(x - y) = 0$. Hence we may say that the imaginary asymptotes to the circle are the real asymptotes to the complementary hyperbola. Our interpretation of the symbol i still holds, for the asymptotes to the rectangular hyperbola pass through the

centre of the circle and therefore cut it at right angles. At the points infinitely far from the centre, the circle and hyperbola intersect at right angles. In a similar way we may say that the imaginary asymptotes, $\left(\frac{X}{a} \pm i\frac{Y}{b}\right) = 0$ to the ellipse $\frac{X^2}{a^2} + \frac{Y^2}{b^2} = 1$ are the real asymptotes to the complementary hyperbola $\frac{X^2}{a^2} - \frac{Y^2}{b^2} = 1$. Referring to annexed diagram (fig. 8) it may be shown that the tangent at Q passes through M' and the tangents at P' and Q' pass through M. As the point M' goes off to infinity, the tangents at P and Q still go through M', the tangents at P' and Q' still go through M and ultimately through O, for $OM = \frac{a^2}{OM'} = \frac{a^2}{\infty}$ ultimately, $= 0$. At the limit the tangents to the hyperbolic system of curves become asymptotes simultaneously, while the tangents to the elliptic system become a series of equal parallel lines.

If we take the point circle $x^2 + y^2 = 0$ its complementary hyperbola is $x^2 - y^2 = 0$, which is the pair of asymptotes to the hyperbola $x^2 - y^2 = a^2$, and pass through the centre of the point circle $x^2 + y^2 = 0$, cutting it at right angles. These are, therefore, its imaginary asymptotes or imaginary tangents, as we may choose to regard them.

I propose to make a few applications of this conception to focal relations in conics. Under Art. 258 (*a*) Salmon's Conics, we find these statements: "The form of the equation ($x^2 + y^2 = e^2\gamma^2$) shows that the two imaginary lines $x^2 + y^2 = 0$ are tangents drawn through the focus. Now, since these lines are the same whatever γ be, it appears that all curves which have the same focus, have two imaginary common tangents passing through the focus," and a little further on, under the same article, we find this: "Hence we obtain the following general conception of foci: Through each of the imaginary points at infinity on any circle, draw two tangents to the conic; these tangents will form a quadrilateral, two of whose vertices will be real and the foci of the curve. The other two may be regarded as imaginary foci of the curves." I propose to show that all this is capable of a real interpretation. The imaginary points at infinity on a circle are the real points at infinity on its complementary hyperbola. When the circle becomes a point, the hyperbola degenerates into its asymptotes passing through the point, and, therefore, through the focus of the conic. Applying our method to the ellipse as a simple focal curve, we obtain the well-known focal relation: "An ellipse has two pairs of foci, one on each axis equidistant from the centre. One pair is real and the other imaginary." It is worthy of notice, in passing, that the imaginary foci of the given ellipse are the real foci of the conjugate ellipse, obtained from the original ellipse by turning the axes through a right angle. The annexed diagram represents the con-

struction. Under Art. 261, Salmon, we find these remarks: "In the particular case where the circle is infinitely small, we obtain the fundamental property of the focus and the directrix, and we infer that the focus of any conic may be considered as an infinitely small circle touching the conic in two imaginary points situated on the directrix." Let the conic be the ellipse. Its directrix is known. The complementary hyperbola to the focal point-circle is a pair of tangents to the first hyperbola touching it on the directrix. This may be verified analytically. Let the ellipse become a parabola, and the directrix of the primary curve becomes the latus rectum of the complementary, and *vice versa*. The above interpretation still holds. Let the ellipse become a circle. As the foci of the ellipse come together, the directrix moves off to infinity, the complementary hyperbola still touching the pair of lines on the directrix until, in the limit, the ellipse becomes a circle, its complement the rectangular hyperbola and the pair of lines its asymptotes. (See fig. 5.)

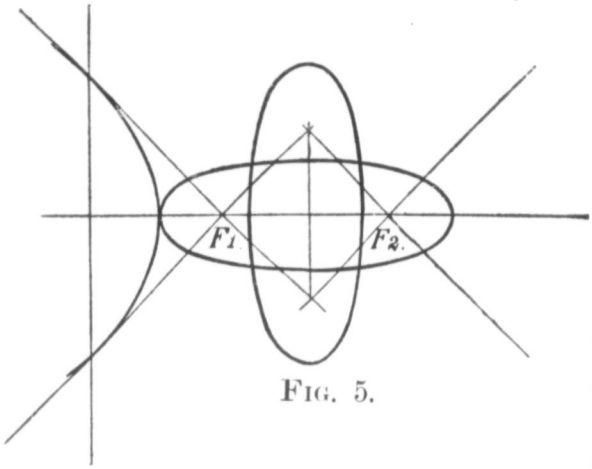

FIG. 5.

Let us now take a more complex curve and examine it for asymptotes. Let the curve be $y^2 - x^4 + 2ax^2y - b^2x^2 = 0$ . . (1). Let $y = mx + n$ be the asymptote. Substituting this value of y in equation (1) and imposing the condition that two values of x shall be infinite, we obtain the two equations, $m^4 - 1 = 0$ and $4m^3n + 2am = 0$. Solving m we get $m = \pm 1, \pm i$ and $n = -\frac{a}{2}$ when m is real, and $n = \frac{a}{2}$ when m is imaginary. The real asymptotes are, therefore, $y = \pm x - \frac{a}{2}$ and the imaginary asymptotes are $y = \pm ix + \frac{a}{2}$. These latter are real lines and real asymptotes to the complementary curve obtained by changing the sign of x^2 in the primary curve. If we examine the complementary curve for asymptotes, we find that the real asymptotes to the primary are imaginary to it, and *vice versa*. The real asymptotes to the new curve are $\left(y - \frac{a}{2}\right)^2 = -x^2$, which are obtained from the imaginary asymptotes to the primary $\left(y - \frac{a}{2}\right)^2 = -x^2$, by changing the sign of x^2 in the given curve. Hence the symbol i, occurring in the equation to an asymptote, tells us that the line is a real asymptote to the complementary curve obtained as above indicated.

Let us examine the parabolic curve $y^2=(x-a)(x-b)(x-c)$ for nodes. Let $c>b>a$. When $x<a$, the values of y are imaginary; but by changing the sign of y^2 they become real and we may represent the locus by the dotted curve opening to the left. When $x=a$, the curve cuts the X axis. When $x>a<b$, the curve is real, represented by the full line; and when $x=b$, it cuts the X axis again. Hence, for values of x between a and b, the curve is a closed loop symmetrical with respect to the X axis. For values of x between b and c, it is imaginary again, represented by the dotted oval. For values of x greater than c, the values of y are real, and the curve remains open to the right as in the annexed diagram (fig. 10).

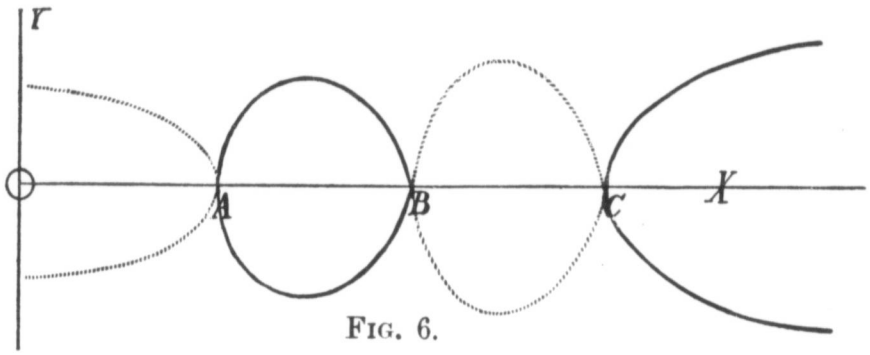

FIG. 6.

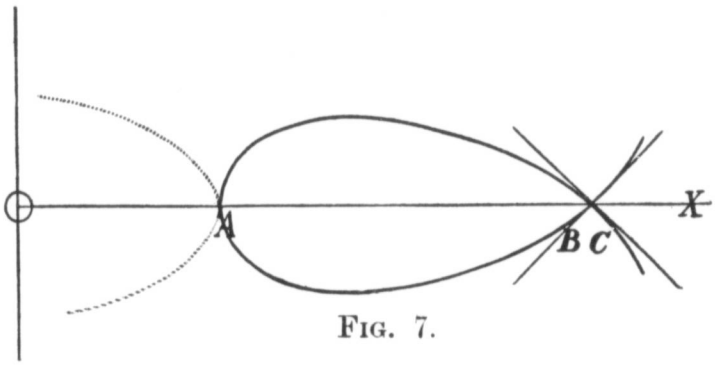

FIG. 7.

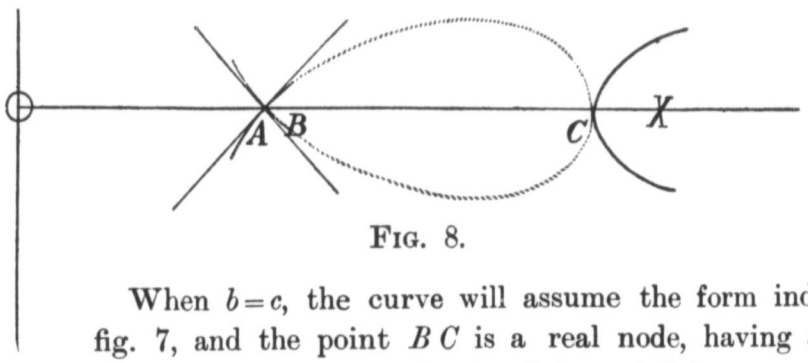

FIG. 8.

When $b=c$, the curve will assume the form indicated in fig. 7, and the point $B\,C$ is a real node, having a pair of tangents to the curve. If $b=a$ the closed loop $A\,B$ becomes the point oval $A\,B$, and the imaginary oval $B\,C$ joins the open branch $O\,A$ as in fig. 12. The point $A\,B$ is now a real point on the curve, but the tangents through it have no adjacent points on the curve. If now we take the

equation $y^2 = (x-a)(x-b)(x-c)$ and making $b=a$, move the origin to $A\,B$ we have $y^2 = x^2(x-c')$. Now, imposing the condition for nodes, we have $y^2 = -c'x^2 \therefore y = \pm i\,x\sqrt{c'}$. We interpret the imaginary symbol to mean as before that the adjacent points to $A\,B$ are not on the primary curve but on its complementary obtained by changing the sign of y^2 in the primary. The node is therefore real to the complementary. Had we made this change of sign when examining the node $B\,C$, fig. 7, we would have found it a conjugate point to the complementary. Hence, conjugate points to the primary curve are real nodes to the complementary and *vice versa*. It follows from these considerations that the form of the complementary curve can generally be determined from the primary by examining the conditions for asymptotes and nodes.

The following corollaries seem evident:

(1) So-called imaginary points are real.

(2) So-called imaginary lines are real.

(3) Every closed curve or loop has a complementary open curve, and *vice versa*.

(4) All tangents and asymptotes are real, either to the primary curve or to its complementary.

(5) All nodes are real, in regard either to the primary curve or its complementary.

(6) A curve of the mth degree and its complementary cuts a curve of the nth degree and its complementary in $m\,n$ real points, those points being excluded that are determined by the intersection of the two complementary curves.

(7) The directional interpretation of the symbol i, as applied to space, is universal.

(8) The argument in favor of space of more than three dimensions, based on the occurrence of imaginary results in analysis, seems to vanish into air.

HISTORICAL SECTION.

AIMS AND METHODS IN TEACHING HISTORY.

CECIL F. LAVELL, M.A., ST. THOMAS.

Our aim in teaching History will depend entirely on our estimate of the profit that its study gives ourselves. Those who have no interest in it for its own sake, or who look upon it simply as a collection of facts which it is necessary to know for purposes of conversation, or for the sake of references in literature, can surely have no very exalted aim in teaching it. To them the subject will be more or less irksome, but at any rate the easiest one on our curriculum from the absorbing point of view of the departmental examinations. But the view of such individuals regarding the educational value of History is of a value somewhat similar to that of a half-civilized Hottentot regarding the fundamental truth of Christianity. Let us rather take as our standard the general attitude of the real lover of History, and then we shall, I think, conclude the greatest profit of the study to consist in a widening of our view of life; a deepening of our sense of man's greatness, littleness and possibilities; an ever-increasing consciousness that to study human nature merely in the present is a thousand times more impossible than to study Shakespeare by reading the last scene of the last act of his last play. Our wisdom would surely become foolishness were we suddenly bereft of our experience by the blotting out of memory. And our experience itself would just as surely lose nine-tenths of its value did it not consist largely of observation of other men's conduct, assimilation of other men's ideas, and a ceaseless drinking in from an infinite number of sources of the subtle influences of society. History is the memory of the human race. Through it we may carry on to an indefinite degree the observation and assimilation of the experience of others, which is the truest road to wisdom. Through it we may not only study the age-long processes which have made us what we are, but live over again the lives of our fathers, and embody in our own minds the wisdom of centuries. This is what we should understand by that

oft-quoted passage in the best known of Bacon's Essays, in which he says that "Histories make men wise."

If this is what History means, then our ultimate object in teaching it should evidently be a widening of view, a thorough and firmly real observation of the progress of the race with a view to a more fundamental knowledge of human nature. But this conclusion must at once lead to a closer examination of the means by which this end is to be reached. Here is the real difficulty. What I have hurriedly stated as to our aim is after all nothing more than a re-statement of what has been said before many times, and said almost fruitlessly. For even while the inspiring and perfectly just generalizations of great men regarding History are awakening our minds to interest and zeal, we are met by so enormous and complicated a mass of data that we are filled with confusion. So we take the records, synopsize them and piece them together into a narrative. We write abstracts of the history of England or Canada, and compel our pupils to memorize, even, no doubt, to partially understand and be interested in them. The result is the easiest subject in our curriculum, but in many ways the least profitable. It is by no means useless, any more than to observe a great crowd and memorize the number and style of bonnets, or the proportion of blondes and brunettes, or even the accidents and the quality of profanity used would be a wholly useless study in human nature. But it certainly does not bring a perceptible increase in mental power, or in grasp of the past in relation to the present.

Now, let us remember first that we are dealing with human actions, not mere names; next, that these are infinite in number, surpassing any man's power to memorize them. Obviously we must select. Now, we need not stop to demonstrate that a great number of rationally associated facts are far easier to learn than a comparatively small number of disconnected and arbitrary facts. So we joyfully recognize that, as a rule, men have a reason for their actions—whether good or bad, or even whether it is conscious or not—and that this reason will have its explanation in their environment. Now, no event, not even the most important, will yield to us any real knowledge of human nature or of the stage of growth which it represents, unless we do see its setting. Any event is then both easiest to remember and most instructive when its relation to its setting is clearly seen. But when we have seen the setting of events, they arrange themselves at once in a very definite perspective. Marathon is seen to be infinitely more important than

scores of battles in which more people were killed or even perhaps greater skill displayed; simply because the surrounding circumstances bring out the fact that it saved European civilization in its infancy from the petrifying influence of Asia.

Without further elaboration, I should suggest, then, in somewhat bald form these two propositions: that in our teaching we should recognize the principle of proportion, and confine our attention in junior classes to landmarks, increasing our detail with each successive year that is devoted to the subject; and secondly, that every fact to which attention is directed should be seen in its relation to the environment of which it is the expression, the result, or the typical controlling point.

Permit me now to illustrate these two propositions. I need scarcely say that our curriculum makes it practically impossible to follow in every form the exact method indicated in either proposition. But take the Junior Leaving work—the most awkward for our purpose—and even there one can do something. Let us take the Roman History for example. According to my creed nine-tenths of the work of teaching is to be done in selection at home. So I look over the whole field and do some careful thinking. My decision then is that there are two lines of facts which must be remembered and clearly understood by my class when the year's work is over—the conquests of Rome and the constitution of Rome. It must be only an introduction in any case, but it depends on my selection whether haste and brevity mean even this and not a mere superficial scum of knowledge—as it almost certainly would for most of the class if we followed the text-book. So in order at the same time to appeal to a sense of the dramatic and strike the keynote of the work, we trace by means of maps, in perhaps one or two periods of forty minutes each, the whole course of Roman conquest, indicating on the board four great steps—the conquest of the other states of Italy, of the dominions of Carthage, of the Hellenized nations east of the Adriatic, and of the Celts. I do this on precisely the same principle on which I should read quickly through the whole of "Hamlet" or "King Lear" before beginning to study it in detail. Then, with our rough background thus secured, we go back and notice a significant fact. We find that almost the whole course of conquest was included in three centuries, from the first Samnite war to the battle of Actium, the greater part of it indeed within two, for after 133 B.C. conquest is by no means the first thing in our minds. If we take the usually

accepted date for the foundation of Rome, for four centuries Rome was merely a small Italian state. From 753 B.C. to 340 B.C., say, she is a small patch of yellow (in the maps which I use) on the map of Italy. Only a century later all Italy is yellow. A century later the islands of the Mediterranean, Macedonia, Greece, and great slices of Africa and Spain are absorbed. Still another century, and the *orbis terrarum* is complete; the Great Sea is a Roman lake. A brief lecture will now point out the fact, which can be enforced by abundant illustrations, that unity, harmony within herself, was essential before expansion was possible. So now we turn to the internal economy of Rome, and follow the great struggle between the patricians and plebeians. The class is prepared when we finish this to see clearly why we take 340 B.C. as the beginning of the new era, and turns with perfect intelligence to the study of the Roman conquests. Similarly the year 133 B.C. stands out with clear-cut distinctness. In it the student sees conquest still going on, for he sees the fall of Numantia and the formation of the Province of Asia, but he sees also the tribunate of Tiberius Gracchus. In order to emphasize this we change our method after this year, and make our studies turn entirely around the persons of great men. In the Gracchi, Marius, Sulla, Pompey, and Cæsar the class follow the fall of the Republic and the beginning of the Empire. In all this they use their text-books only for reference. Many names, facts and dates mentioned there are not mentioned in class at all. It is better that they should *know* what they learn, and have it in rational, coherent shape, than that they should be familiar with the names, for instance, of the early prose writers. In a review the examination must be considered, and the pupils learn many more or less useful or confusing details, but during the whole session the facts that are ruthlessly insisted upon are such things as the expulsion of the Kings, the Licinian Rogations, the Metaurus, the work of the Gracchi, Pharsalus and Actium, with dates and details or anything else that will bring them into absolute clearness.

Allow me now to indicate what I mean by studying every event in relation to its setting. One example will suffice. After finishing the Wars of the Roses and dwelling on their consequences, I glance ahead to make my selection of landmarks for the sixteenth century, and decide that almost everything turns on three lines—the Reformation, the opening up of the new world, and the relations with Spain, these being all closely intertwined. In the lower

forms of the school, then, I should, after studying the great movements which seem to synchronize with the reign of Henry VII. and the early years of Henry VIII., move forward at once to the divorce, and after glancing at it plunge in detail into the Reformation. The name of Luther, the date and circumstances of his first protest, his defiance of the Church, the rapid spread of his doctrines, and England's Act of Supremacy, are all carefully reviewed and learned. Then the principle that attack produces resistance and counter-attack is laid down and illustrated to pave the way for the study of the great movement known as the Counter-Reformation. Just as Luther and 1517 are remembered, so the pupils learn of Ignatius Loyola and the formation of the great spiritual army in 1534 and the years following. The purpose of the Order of the Jesuits and their methods of working are sketched in talks to the class, and the knowledge of the pupils is made definite by a few especially telling names and facts which they are asked to memorize. The reality of the Counter-Reformation is brought out by the fact that Mary's reign represents the temporary victory of the movement in England. And as the pupils learn how its temporal side became identified with the power of Spain, they easily recognize the European and religious side of the episode of the Invincible Armada. When we have finished the sixteenth century, then the class will think of the great religious struggle as falling into three waves, so to speak—the first gathering round Luther, with 1517 and 1534 as typical dates; the second gathering round Loyola, Mary, and Philip of Spain, with 1534, 1553 and 1572 as dates; the third, the return tide of Protestantism gathering around Elizabeth and the Puritans, with 1558, 1577-80 and 1588 as typical dates. The details to be remembered are increased later on when the framework is firmly secured, but these do for the junior forms. In the same way I should treat absolutely every part of our history work—keeping perspective constantly in mind. Thus it used to be considered proper to have us learn as the sum of the work of William the Conqueror—"The Curfew Bell," "The New Forest," and "The Domesday Book." There is only space for this one criticism—that at no stage in Public or High School work are any of these worth even mention, except by way of illustration; and this one suggestion—that the prime thing for any one to know concerning William is the way in which he solved the tremendous problems that faced him. We must put ourselves in his position, see his difficulties, and follow the means by which he laid the

foundation of a permanent and powerful monarchy and gave unity to England.

Now, in closing, let me modify one of my positions in a way that I could not do at first. I said that no event should be learned unless its relation to its setting could be seen. To this I should make one exception. To give a true notion of the passage of time a thread of chronology must be kept in mind, and so I should rigidly insist on every pupil knowing thoroughly the dates of the accession and death of every British sovereign. But this is practically the sole exception to which I could consent.

In this paper I have omitted almost all mention of the numerous side illustrations and aids of all kinds which may be introduced to make the events and movements of history vivid. But this omission is not a sign of contempt. I have simply dwelt on the need that seems to me most immediately pressing.

FIRST STEPS IN THE DISCOVERY AND EXPLORATION OF ONTARIO.

JAMES H. COYNE, B.A., ST. THOMAS.

On the 17th August, 1535, whilst off the Island of Anticosti, Cartier learned of the existence and immense extent of the River St. Lawrence.

On the 3rd October he climbed Mount Royal, saw the Ottawa, and was told that the navigation of the St. Lawrence required more than three months, and there were three rapids to pass. The Stadacona natives afterward informed him, from hearsay, that beyond Hochelaga were two large lakes, "then is found a fresh-water sea, of which no one had seen the end."

In September, 1541, Cartier ascended to the second sault beyond Hochelaga. His map, showing "all the river of Canada," including the Great Lake, disappeared. Maps of the Upper St. Lawrence until 1612 are based upon his narrative.

In July, 1603, Champlain and Pontgravé vainly attempted to stem the Lachine Rapids. Their skiff could neither be rowed nor towed against the current, and Champlain decided to depend for further discoveries upon that wonderful Algonkin invention, the birch-bark canoe.

The Algonkins repeated to Champlain what Cartier had already recorded concerning the Great Lake. Their accounts were inconsistent and confusing. Was it the lake next beyond Ontario? Was its outlet through Niagara or through some immense stream discharging into the South Sea? Was there salt water near it? The complaisant savages answered to suit the eager explorer, placing the salt water now at the west end of Lake Ontario, now just above Lake Erie, and again in the Upper Great Lake. Some map-makers puzzled later explorers by giving the name Salt Water Lake to St. Clair.

Champlain learned from the Algonkins in 1603 of a river route from Lake Ontario to the northern Algonkins, and also of the nation of the Hurons, called by his informants "the good Iroquois," who came to barter with the Algonkins for French goods. These "good Iroquois" spoke of a copper mine in the north.

The "unparalleled" wonders of the "Mocosan Falls" are referred to in the verses prefixed to Champlain's Travels in 1603. Clearly Niagara is meant, but the poet was romancing when he said the explorer had gazed upon it.

When and by whom was Ontario discovered? It was in June, 1610, that a young man, who had accompanied Champlain and Pontgravé to the Sault St. Louis, eagerly craved permission to go among the Algonkins and learn their language. The leaders persuaded him to undertake the further task of visiting the Great Lake, and reporting generally upon the country, its rivers, mines and inhabitants. Somewhere up the Ottawa on the southerly side dwelt a tribe of Algonkins. Their chief, Yruoqet, was with some difficulty induced to take the young adventurer with his party on their homeward voyage. The latter spent a year in their country. He adopted their dress and acquired a fair knowledge of their language. On the 13th June, 1611, escorted by two hundred Hurons with three chiefs, including Yroquet the Algonkin, he arrived at the foot of the Lachine Rapids and gratified Champlain with a description of his travels. This was the first exploration of any part of what is now Ontario.

The discoverer was undoubtedly Etienne Brulé. At the age of about sixteen he had come to Quebec in 1608 with the original settlers. For nearly a quarter of a century he pursued his adventurous career as explorer, interpreter, fur trader and guide. At last a Huron club or tomahawk ended his career on the lonely shores of Matchadash Bay.

With Brulé and Yroquet were four Indians, who had beheld a sea far beyond their own land, but they reported to Champlain that the route was difficult and the neighboring tribes were hostile. They explained the topography by diagrams. On these maps and oral reports was based no small portion of his celebrated maps of New France.

Champlain's large map of 1612 was the first attempt to delineate the region now known as Ontario. To avoid committing himself, he shows only the eastern part of the "great lake." The legend represents it as 300 leagues in length, and Lake Ontario as covering fifteen days of canoe travel. The lakes are connected by a short river, with a "sault d'eau" at its outlet. The Ottawa and St. Lawrence are shown with a chain of islands between, forming an archipelago. There is a suggestion of lakes Temiscaming and Nipissing, the latter being connected by a river with the Great Lake;

and of the Trent River system, commencing, however, in Lake Simcoe. Champlain probably to the end of his life regarded Lake Michigan as a river. It appears as such in all his maps. The "great water" described by the savages is a composite of the four upper lakes.

In his smaller map of 1613 are included the meridians and significant corrections. The Ottawa is now a separate stream, but joins the St. Lawrence at its upper extremity near the Nipissings. Another river intervenes, paralleling both, and the archipelago idea is continued by connecting streams. Lake Ontario receives a name, "Lac St. Louis." The Hurons are north of the lake under the name of Hochataigains. Vignau, after spending a year at Allumette Island among the Algonkins, returned to Paris in 1612. Hudson's chart of the bay called by his name was published at Amsterdam the same year. Champlain's map did not ignore this recent information.

In 1613, with three other Frenchmen and an Indian guide, Champlain paddled and portaged up the Ottawa as far as Allumette. He discovered that part of Vignau's story was a mere fabrication. Although anxious to proceed to the Nipissings, he was discouraged by the Algonkins, who exaggerated the difficulties of the journey. Reluctantly he abandoned his proposed exploration and returned to France.

In the year 1615, after a long struggle in France with the fur company, who did their best to thwart his schemes for the expansion of the colony and the civilization of the savages, Champlain returned to New France, accompanied by three priests and a lay brother of the Recollet Order. Father Joseph Le Caron set out with twelve Frenchmen for the country of the Hurons. On his arrival he appears to have found French fur traders there before him. The route was by the Ottawa (then called the River of the Algonkins) to Mattawa, then up the Mattawa to Lake Nipissing, down French River to Georgian Bay, and then southward threading the almost countless islands, past Byng Inlet and Parry Sound, to Matchadash Bay, which they crossed to Penetanguishene or Thunder Bay. On the 1st August, Champlain arrived among the Hurons with Brulé and another Frenchman, and two Indians, in two canoes, after a journey of twenty-three days from the mouth of Rivière de Prairies below Montreal. On the 3rd he met Father Joseph, who had preceded him to the country. During the month of August Champlain passed from village to village as far as the narrows

between lakes Simcoe and Couchiching, whilst the forces of the Hurons and Algonkins were assembling for the purpose of their war against the Iroquois. The Carantouans (probably the Andastes at the head waters of the Susquehanna) had promised to help with 500 men, and it was decided to send two canoes with twelve of the most robust Indians to notify them to be ready to join the expedition when it should arrive in the Iroquois country. Brulé's earnest request that he should be permitted to accompany this embassy was readily granted. The canoes started out on the 8th September, and that was the last that was heard of Brulé for nearly three years, when he again met Champlain at the Sault St. Louis, and gave a satisfactory explanation of the reason. The romantic history of his adventures is recounted by Champlain in his "Voyages et Découvertes," published in 1619. Champlain with his Indian allies and a few Frenchmen proceeded by the long portage and canoe route down the Trent River to Lake Ontario, which he entered near Kingston and crossed. After an unsuccessful attack on the Iroquois in which Champlain was twice wounded, the ill-starred expedition returned to the east end of the lake. The Hurons were unwilling to carry out a previous understanding that they were to take the explorer down the St. Lawrence to Quebec, and the hunting season having now arrived, they disbanded their forces in order to devote themselves to the chase. The story of Champlain's adventures in the woods back of Kingston is familiar through Parkman's interesting paraphrase of the explorer's own account. As the guest of his savage friend Darontal, he spent the winter among the Hurons. In January he made with Father Joseph a visit to seven or eight villages of the Tobacco Indians (Petuns) south of Nottawasaga Bay, and afterward to the *Cheveux Relevés* (Ottawas) who were settled between the Petuns and Lake Huron, south of the Bruce Peninsula. Nearly a month was spent in this exploration. He greatly desired to visit the Neutrals, whose territory lay all along the north shore of Lake Erie and extended a short distance east of the Niagara River. He was, however, dissuaded by his allies, who feared for his safety on account of a Neutral having been killed in the Iroquois war of the previous year. On the 20th May, accompanied by Darontal, he returned to Quebec. As far as is known, this was the extent of Champlain's personal acquaintance with our province. If the dotted line in his large map of 1632 is to be taken as indicating Brulé's route to the Andastes, the famous interpreter must have found his way to some

point above Detroit, whence he proceeded to the Ohio, which he would seem to have followed to a point near the Andastes, although the map contains no suggestion that the existence of the Ohio was even suspected.*

This last map of Champlain was the first attempt to outline any part of what is now Ontario from actual knowledge, and was the foundation of all subsequent maps for at least twenty-four years. It marks a considerable advance upon the maps of 1612 and 1613. The "great lake" is at least definitely located above Lake Huron. Brulé had doubtless reported its situation as well as that of the Falls of Ste. Marie, called by Champlain the Sault de Gaston. Lake Michigan is still a large river emptying into Lake Superior. Islands are shown at the north-west end of Lake Huron, but the North Channel and Georgian Bay are still one body, and Lake Huron proper is practically non-existent. The channel discharging the waters of Georgian Bay into Lake Ontario has now two small expansions, with islands corresponding fairly well with Walpole and Pelee Islands. The expansions are little broader than St. Mary's River. The great cataract extends a considerable distance down the river. The explanatory note adds that it is at the extremity of Lake St. Louis, is very high, and several kinds of fish are stunned in descending it. Later travellers mention a custom of the Indians to wait at the foot of the rapids below the falls for the purpose of gathering these 'stunned" fish. Near shore, just west of the centre of Lake Ontario, are two islands. The St. Lawrence is given conjecturally with two expansions and five rapids between Lake Ontario and the Ottawa. The Trent system is shown, of course, and the Ottawa with its lakes, islands, rapids and one or two tributaries. The Rideau River and Falls and the Chaudière Falls are given. Lakes Simcoe and Couchiching are represented, but the latter expands directly into Georgian Bay. Lake Nipissing and French River appear, and indentations suggesting Shawanaga Bay and Parry Sound. The peninsula of Southern Ontario, owing to the approximation of the outlet of Georgian Bay to Lake Ontario, dwindles to a narrow strip. Lake Nepigon appears north of Lake Superior, but its outlet is in the "Mer Douce" (North Channel or Georgian Bay). On an island in it is the much-talked-of copper mine. Altogether it may be said to be the map of Ontario in

* C. W. Butterworth, in his work on Brulé, considers the dotted line to indicate a well-known trail to the Andastes, but is of opinion that Brulé went by Burlington Bay and the Niagara crossing.

embryo. Much remains to be done in the way of development; but it is a creditable production, and of the first importance in the cartography of Ontario.

Brulé had brought back from his wanderings extraordinary accounts of the Neutral Nation, among whom he had been. The curiosity of the Recollet Daillon, who had just arrived in the Huron country, was aroused, and he was glad to respond to Father Joseph Le Caron's request that he should continue his journey to the Neutrals. Leaving the Jesuits, Brebeuf and De Nouë, who had accompanied him from Quebec, and taking with him two Frenchmen, Grenolle and La Vallée, he passed through the territory of the Tobacco Nation (Township of Nottawasaga) and on the sixth day arrived at the first village of the Neutrals. He visited five other villages, and in the last of these took up his abode. His visit, which extended from the 18th October, 1626, until after the 8th March, was probably limited to the district near Burlington Bay; but he brought back information as to the extent and products of the country, the character, manners, and customs of the natives, and the advantages of a direct trade between them and the French.

Fourteen years later, the famous Jean de Brebeuf and Joseph Marie Chaumonot made a more extended exploration of south-western Ontario. Nicolet had discovered Mackinac and Green Bay in 1634, as Sulte has shown. In 1640 Father Ragueneau had communicated a Huron map showing the entire Huron-Iroquois country. In 1641 Father Raymbault visited Sault Ste. Marie and mapped Lake Superior, and Chaumonot rendered the same service for the country of the Neutrals. These maps are not extant, but doubtless furnished material for Sanson's well-known map of 1656, the principal part of which is reproduced in Mr. Boyle's report for 1897-98. Garnier and Jogues established the "Mission of the Apostles" among the Petuns in 1640. Sanson mentioned among the mission villages S. Simon, S. Jude, S. Peter and S. Paul, between Nottawasaga Bay and Lake Huron.

To establish the "Mission of the Angels," Brebeuf and Chaumonot passed through eighteen Neutral villages, in ten of which they sojourned for some time. Sanson names five, all west of the Grand River, as follows: S. François, north-east of Sarnia; S. Michel, near Windsor; S. Joseph, near Ridgetown; Alexis, west of St. Thomas, and N. D. des Anges, near Brantford. His map claims to be constructed from the "Relations" of the French. It is fairly accurate in both its outlines and details, especially when

compared with many later maps, and is evidence that considerable exploration had been going on. Lake Erie, already named in Boisseau's map of 1643, for the first time appears as one of the great lakes, and is named "L. Erié ou du Chat." Lake Ontario is fairly outlined and has its modern name along with the older appellation, St. Louis. Lake St. Clair is shown, and the name "Sea-water Lake" *(Lac des Eaux de Mer)* is a reminder of the stories told to Cartier and Champlain. The lower ends of lakes Michigan and Superior are given under the name of De Puans and Superior respectively, no doubt from Nicolet and Raymbault's information. Manitoulin and St. Joseph's islands are fairly represented. For the first time are shown the divisions of Lake Huron, known to us as the North Channel, Georgian Bay and Lake Huron proper. Several rivers, creeks and small lakes of Ontario are given, besides those discovered by Champlain. Thus we find a stream intended for the Saugeen or Maitland; another is clearly the Aux Sables; a tributary of Lake St. Clair, corresponding to the Sydenham or possibly the Thames; the Grand River is clearly shown, apparently rising in Blue Lake; Kettle Creek is indicated beyond question; Lake Medad is shown; Lake Simcoe, named Ouentaron, appears with its southern prolongation, and its outlet through Lake Couchiching. The Muskoka lakes must have been explored. Lake St. Francis is named Naroua. The island midway between Gananoque and Ogdensburg, afterwards so well known by the name of Toniata, is given the name of Isle Capaqirehissins, and the tribe on the north bank opposite is called Touthataronons, which may easily be the compositor's reading of Tonihataronons. Other tribes along both shores of the St. Lawrence are named. A village of Ongiara appears east of Niagara Falls. The Iroquois lakes are delineated. The streams emptying into each of the great lakes from the south indicate actual knowledge. Of course, much of the detail is inaccurate, but what is now the Province of Ontario assumes something like its actual proportions. We have at last a map which, with at least an approach to accuracy, represents the Province from its eastern and southern limits north-westward as far as the eastern part of Lake Superior. This map is doubtless the result, as far as South-western Ontario is concerned, of the explorations of the Jesuit priests, between the 2nd November, 1640, and the 19th March, 1641. It makes a distinct and decided advance in the knowledge of the whole region north of the lakes, and is without doubt one of the most important achievements of the European map-makers of the seventeenth century.

COMMERCIAL SECTION.

VALUES.

J. S. Black, Chatham.

Among several good reasons that we advanced in support of the position that Book-keeping occupies on our school programme, one of the most important is that it has a scientific basis, and another that the material for the study of the science is readily accessible. In this paper I shall urge that a more rational treatment and explanation shall be given to some parts of the subject, in order that we may justly make the claim that we are teaching a science.

A moment's reflection will induce us to agree that Book-keeping is a deductive science like Arithmetic, and not an inductive one like Physics. Yet a perusal of many of the text-books would lead us to believe that their authors held the opposite view and were endeavoring to lead the students to discover some hidden law. There is no hidden law, but the authors seem to be suffering from the delusion that the Creator had a little time to spare after determining to govern His universe by the law of Gravity, and had bethought himself to establish a principle to govern Double Entry Book-keeping.

Inductive and deductive processes of thought and study are well known. In the inductive the facts are examined to discover hidden relations; in the deductive a principle is stated and its application to particulars is considered. Both demand an intimate acquaintance with the facts, the former to enable us to recognize hidden likenesses, the latter to enable us to define the particulars.

Book-keeping should be studied deductively. The principle of double entry is a mere human device, and, being exceedingly simple, it should be stated straightway. Instead of doing so, we observe various authors unfold the subject by collecting a mob of petty rules from a wilderness of details, then they generalize the petty rules into two, which, unfortunately, are hopelessly incomprehensive.

Let me illustrate. The High School text-book proceeds to analyze ledger accounts, and after an exhaustive examination of

ten kinds, states fifty-two rules that govern their debits and credits. Then the following generalizations are the outcome: First, "The person receiving value without giving equal value at the time is made Dr., and the person giving value without receiving equal value at the time is made Cr." Second, "The thing received is made Dr., and the thing parted with is made Cr." But there are some of the ten accounts examined for which these rules are useless. For instance, "Interest and Discount." One set of petty rules, clashing with another, keeps the teacher following such a guide continually in the midst of explanations and apologies. After the pupil masters the fifty-two rules and some twenty-five more, and perhaps instinctively detects the underlying principle, the discord is hushed.

Now, all this is contrary to a deductive scientific method of treatment. Instead of the fifty-two rules, or even the two generalizations of them, there is but one simple rule that governs Debits and Credits. It is manifestly more desirable to know and state this rule than to leave the pupil at the mercy of the mob of subordinate rules.

To my mind the difficulty of stating and using it has arisen from:

1 A hazy conception of the thing called "Values."

2. An absurd conception of credit transactions.

3. A confusion of thought regarding the book-keeper's meaning of the terms "Interest," "Commission," etc.

4. The failure to give any rational meaning to "Loss and Gain" and "Stock" accounts.

5. The using of meaningless formalisms, such as the atrophied "Dr." and "To."

The text-book says: "Book-keeping is the recording of business transactions," and proceeds by saying: "A business transaction is the exchanging of values." We naturally expect a definition of values; but none follows. Neither is the word defined in any other Book-keeping text-book. This is surely a grave omission. What are values? Before giving you the perhaps crude definition I have stated to my classes, I wish to deal with some of the other difficulties enumerated above.

If book debts or personal accounts will sell at auction for $25, it is evident that they must possess a value. If the names John Smith, Henry Brown or William Jones appear in the list of assets of a business, it is further evidence that they are valuable. But

the text-book in examining these at their origin would lead us to believe that they possess no value. In dealing with such a transaction as, "Sold John Smith on account an overcoat for $25," it practically says we give an overcoat but at the time get from him nothing in return. I contend, however, that we do get immediately something from John Smith for the overcoat. The text-book concedes, that had we received John Smith's note for the overcoat, we would have received a value for a value. The note can be seen and handled and is therefore recognized as a value, while the unseeable, intangible claim on John Smith is lost sight of. But the value possessed by the one is inherent in the other. It consists in both in the promise to pay. In the note his promise is written and unconditional, in the other it is unwritten and perhaps only implied. But the overcoat is given in either case in immediate exchange for value; in the one case, for John Smith's note, and, in the other, for John Smith's unwritten promise.

Now, in reference to the names of these values. The former is immediately labelled "Bills Receivable." A moment's reflection will induce you to agree with me that the claim on John Smith is very simply named "John Smith." Therefore, when we find this name in a ledger along with Cash, Merchandise, Expense, Bills Receivable, etc., it does not mean the man John Smith, but a value like Bills Receivable.

It is quite easy to conceive of two things having exactly the same name. The subject of Geometry is named Euclid, and the name is also applied to the man who originated the study. The man and the thing are never confused through having the same name. The town, Milton, is never confused with the poet, Milton. So the value, John Smith, need not be confused with the man, John Smith. The value is bought and sold like notes, mortgages, bonds, or debentures. The man simply lends his unwritten promise, his name, until he redeems it and ends its existence.

I think now my conception of a credit transaction is plain to you. When I say with reference to the above transaction that we get a value and give one, I mean that we get John Smith and we give Merchandise. I do not mean we get the man, John Smith, but the thing, John Smith.

Therefore, I would say that the true conception for a book-keeper to have of the ledger titles, John Smith, Henry Jones, William Brown, etc., is that these are the names of things in the form of unwritten promises, while, at the same time, they are the names of men.

Regarding "Interest," "Commission," etc.: Arithmetics and Dictionaries say Interest is the money paid for the use of money. But they would not say the money paid for the use of a man's muscles to dig a trench is ditching. The labor performed is named ditching; the money paid for the labor is something different. Yet the money paid for the service performed for us by a banker is named Interest. The laborer's services are named ditching, the banker's services are not named at all. The payment for the laborer's services is named Cash. The payment for the banker's services is doubly named. It is blessed, or rather cursed, with two names, Cash and Interest.

The book-keeper saw the inequality and inconsistency in the one thing having two names and the other having none, and seized upon the name Interest and applied it to the service performed, that is, the *use* of the money, thus making interest analogous in its application to ditching, building, plowing, advertising, transporting, etc. But the book-keeper did not say anything about the twist he gave to the meaning of this word of common speech. Consequently, the uninitiated do not think otherwise than that the book-keeper means that Interest is the money paid for the use of money. Let us early acquaint them with the fact that in the language of Book-keeping both Interest and Discount are names of services for which we pay money.

The same failure to conceive of two absolutely distinct things exists with regard to a large number of other instances. Commission, Rent, Taxes, Freight, Express, Exchange, Collections, Telephoning, Telegraphing, Insurance, etc., are all services performed for business men. Yet these men, their book-keepers, and authors of Book-keeping text-books have not insisted that the services and the money paid for the services are perfectly distinct. Let us remember, then, that in Book-keeping the names enumerated above are to be applied to the services performed, and that the money paid for these services is sufficiently named when called "Cash."

I think I am now in a position to state my definition of values. But, starting at the beginning of the subject, we have: "Book-keeping is the recording of business transactions." "A business transaction is the exchanging of values." "Values are wealth, services, and claims." "Wealth comprises all articles, useful or desirable." (John Stuart Mill's definition.) "Services include the use of wealth, ordinary labor, the doing of undesirable things, and the forbearing to do the desirable things." "Claims are pro-

mises to pay money or other values." The promises may be written, unwritten, or only implied.

The following values are named "Cash":

1. Wealth in the form of gold and silver coins.

2. Written claims, named Bank Bills, Cheques, Demand Drafts, Bank Drafts, Express and Post Office Orders, and generally, any claim that can, on demand, be exchanged for gold or silver coins.

The following values are named "Bills Receivable": Claims in the form of written promises to pay us. They include Promissory Notes, Drafts, Acceptances, Mortgages Receivable. The last may be considered a distinct value and named by its own name.

The following values are named "Bills Payable": Claims in which we make written promises to pay. They include Promissory Notes, Acceptances, Mortgages Payable.

The following values are named "John Smith," "Henry Brown," William Jones," etc.: Claims in the form of our unwritten promises to pay John Smith, Henry Brown, William Jones, etc., or their unwritten promises to pay us.

The following values are named "Merchandise": Wealth of various kinds, which is kept by us for sale, also the services named Freight and Express.

The following values are named "Real Estate": Wealth in the form of Lands, Buildings, Mines or Standing Timber.

The following values are named "Expense": Wealth in the form of various articles which we intend to use in conducting the business. Also the following services: Insurance, Taxes, Rent, Repairs, Commission, Collections, Exchange, Advertising, etc. Any one of the foregoing services may be considered a distinct value and be named by its own name.

The following service is named "Interest and Discount": The use of money. This service may be rendered directly, in the form of lending money, or indirectly, in the forbearing to collect a debt, or in the prepaying of a debt.

The value formed by combining Merchandise and Cash-Freight into a shipment to Benson to be sold on our sole account and risk is named "Shipment to Benson." It is wealth.

I give these as illustrations of the outcome of naming and defining values. Without exception, every ledger account is the name of a value in the form of Wealth, Services or Claims, or a combination of some two of these. The only common ones that I have not defined and discussed are "Stock," and "Loss and Gain."

With reference to them let it be remembered that the book-keeper must always think of business and not the proprietor as his employer. If the proprietor is the book-keeper, let him also think that he is the servant of the business.

Now, when the business is begun, the proprietor gives it Cash, Merchandise, Bills Receivable, etc., and gets a claim named "Stock." Stock Account is therefore a value. If the proprietor's name appears before the word Stock, the value will be better named.

There is another claim the proprietor has on the business. It is named "Loss and Gain." This value is the name of the proprietor's claim for those shrinkages, or growths of the other values. At the end of each business period this claim is transferred to the general claim named "Stock." It is, therefore, merely another Stock Account.

Now, I say at the outset that a deductive science demanded that the facts be defined before the general law can be properly applied. I have defined my facts. Let me now apply the one rule of debits and credits that I offer instead of the fifty-two petty rules and their generalizations.

Before recording a business transaction we write above it two sentences, each to occupy a line. The first sentence is: The business gets the value named "A." The second sentence is: The business gives the value named "B." Since the subjects of these two sentences are the same, and since they are invariable, it is unnecessary to write them. Further, the verb of the first sentence is always "gets," and the verb of the second sentence is always "gives," therefore it is unnecessary to write the verbs. So that the whole of each sentence is fully understood when we write "A" on one line and "B" on the line below it and to the right. Thus:

A.

B.

Let me illustrate: I sell John Smith goods for cash $50.00. The sentence may be written in full thus:

The business gets Cash 50.00
The business gives Mdse 50.00

But the same impression is conveyed to the mind by writing

Cash..... 50.00
Mdse..... 50.00

But if I put after Cash and before Merchandise the clap-trap "Dr." "To" I make my sentence meaningless by adding a sing-song dead formalism.

Book-keeping, therefore, demands that, in connection with the recording of every business transaction in a book of original entry, we write the record in such a manner that there stands out distinctly the name of the value we get, and also the name of the value we give. If a pupil can recognize values by name and can distinguish the one we get from the one we give, why load the unfortunate victim with half a hundred rules about meaningless things called Debit and Credit?

Book-keeping, besides requiring the recording of business transactions, demands a rearrangement of the record in a book called the Ledger.

A Ledger Account is a page, or part of a page, devoted to the rearranged record of a particular value. The page is divided vertically into two equal parts. The left side is named the Debit side and the right the Credit side. The Debit side is a record of the getting of the value, and the Credit is the record of the giving of the value. The method of writing the record of each side is alike and very simple. The book of original entry is searched for occasions when we got the value; the Debit entry is then made. It usually consists of the date in the first column, the equivalent in the next column, the page of the book of original entry in the next, and in the last the measure of the value in dollars and cents.

Before dismissing the books of original entry, let me give a few sample Journal entries worked out after the principles I wish to emphasize.

First: Sold John Burns on account a bill of Mdse. $200.00. We decide that the business gets the value named "John Burns," and the business gives a value named "Merchandise." We write:

John Burns.....$200.00
Mdse..... $200.00

Second: John Burns fails, and can pay only 50 cts. on the dollar. We get our share in cash, $100.00. We easily decide that the business gets cash $100.00, but we have some difficulty in deciding upon the name of the other value. A few moments' reflection will lead you to agree with me that the business gets a claim on the proprietor for the other $100.00. A claim of this character we decided to call "Loss and Gain," so we write:

Cash.....$100.00
Loss and Gain..... 100.00
John Smith.....$200.00

Third: I paid my note in favor of Henry Brown, $100.00, and interest $10.00, with cash. We have had the use of Henry Brown's money. The record is now to be made that Henry Brown performed a service named Interest and Discount. We write:

Bills Payable		$100.00
Interest and Discount		10.00
Cash		$110.00

My paper is now long drawn out, but I wish to call your attention to the helpfulness in the preparing of a Statement of having the Ledger titles known as the names of values, and the accounts as rearranged records of the values, and the simple idea that the Debits are the occasions and the amounts of the value received, and the Credits the occasions and the amounts of the value parted with. The classification of accounts can be proceeded with in a rational way. Such stupid classifications as "Real" and "Representative," or "Personal, Property" and "Allowances" will not be the outcome. When the pupil knows that every value is either a service, a claim, or wealth, and that claims do not vary in value, while services and wealth do, he will readily pick out Resources, Liabilities, Losses and Gains.

CAN THE WRITING OF OUR SCHOOLS BE IMPROVED?

J. A. DICKINSON, LONDON.

Writing may be judged according to a double standard: (*a*) Adherence to the principles of letter formation as laid down in the system employed, and the symmetry as regards spacing, alignment, size and slant of the component parts of each word, and of the words themselves. (*b*) Facility of movement, and the consequent degree of rapidity and ease with which it is executed.

According to the former, writing is regarded as a work of art, the end for which the time and labor spent in its production was expended. According to the latter it is regarded as a means to an end, an equipment for the performance of certain manual exercise devolving upon all who enter mercantile life.

Writing, which by the first standard may be pronounced perfect, being executed with due regard to form, spacing, etc., and strictly in accordance with the principles involved, may, when produced under conditions which obtain in business life, degenerate into an almost illegible scrawl.

In this same way systems of writing may be compared:

(*a*) As to artistic appearance and legibility of the product.

(*b*) As to movement, freedom and rapidity of execution.

The system which gives the most artistic symmetrical and legible product cannot necessarily lay claim to the foremost place. It can only do so when the product excels in the foregoing respects, and is obtained under the actual existing conditions in mercantile or professional life.

In the past so unsatisfactory have been the results of our school work in this subject that "Vertical Penmanship," an entirely new system, has been introduced ostensibly to remedy the defect—viz., the faulty slant system. That the new system will produce satisfactory results, and furnish graduates of our schools with the desired equipment—*par excellence*—is not yet conceded. It is generally conceded, however, that the new system is superior to the old because of its greater legibility, and its ease of acquisition by beginners. But that it should oust the old system from our schools, as its advocates claim, to my mind does not follow.

Among the members of the teaching profession, which is divided on this point, there seems to be a tenacious partiality to the one system with an equally persistent rejection of the other. This is very unfortunate because of the failure of profitable discussion on the subject by the advocates of the different systems, especially when the chief cause of the unsatisfactory results under the slant system will operate largely against securing the best results under the new system.

The want of a properly graded series of exercises for securing freedom and ease of movement, or at least the want of such practice in school, while the pupil is forming conceptions of the units of the writing alphabet, and acquiring notions as to union and spacing of those units, alignment and regularity, etc., must necessarily leave the pupil with a handwriting more or less inadequate for the requirements of business.

To my mind the cause of such poor results, under the slant system as regards form and illegibility, and under the vertical system as regards ease of execution, is a lack of good teaching, and by that I mean scientific, common-sense, and honest teaching, requiring the exertion of all the powers of the teacher instead of the haphazard, go-as-you-please kind of teaching in vogue.

From my own observation, and from conversation with others having greater advantages for observation, I am forced to the conclusion the time set apart for writing in our schools is in a great measure thrown away, or worse, in that the pupils are but confirming bad habits formed in the early classes at school as regards formation of letters and movement. The lesson is too often a lull in the active work, in which the pupils copy forms and outlines, most of which have been copied from the time of the earliest writing lesson, and which will continue to be copied to the end of the school course. In the case of rural schools the teacher is often busied with other classes, giving the writing lesson no attention whatever, and in graded schools he has a period of rest, or moves among his pupils exhorting to correct position of bodies, pens, books, etc. It is not surprising that the inevitable result follows—a lack of freedom and rapidity of movement, and the consequent confirmation of an inferior handwriting characteristic of junior students rather than a superior, free and elegant handwriting of the graduates of a good course of training. Very true there are exceptions, and here and there a certain school or class is noted for the quality of the penmanship, and there you will always find a good teacher,

orderly in his habits, methodical in his work, and always alive in the writing lesson. These exceptions, however, do not contradict the statements of business men in all our cities and towns, that the great majority of our pupils leave school with a style of handwriting that is of little use in everyday business life.

Naturally the question suggests itself, "How can the writing of our schools be improved"? My answer is:

I. By better instruction in the class-room (*a*) as to forearm and combined movement; (*b*) as to the principles from which our written characters are formed, and the classification of the letters according to those principles.

II. By the use of a graded series of movements to be used concurrently with the practice afforded by the copy-books.

It will not be necessary to discard this or that system, as the system alone cannot insure satisfactory results, though it must be acknowledged the vertical system requires less teaching on the formation of letters, as they are simpler, and involve fewer principles of formation.

That there is great necessity for training in movement is plainly seen from a consideration of preface of Newland's and Row's book, pars. 2, 3, 4, and more forcibly seen in the cramped slow and frequent back-hand of those who are left to themselves to practice according to the instructions.

After a criticism of the instructions given in the preface of Newland's and Row's copy-books, the paper was continued orally, (and illustrated by use of blackboard), comparing the formation of the letters of each system of writing, the simplicity and likeness of the vertical letters to printed forms. The result of the paper was a half-day discussion of the relative merits of the two systems by the members, which brought out the fact that, generally speaking, the teachers regard the vertical system better for all whose school course is short, as it is more easily acquired, but that it fails to secure the easy, graceful style required by those whose course is longer and whose handwriting is an important factor in the mercantile life.

PUBLIC SCHOOL DEPARTMENT.

THE RELATION OF THE PUBLIC SCHOOL COURSE TO LANGUAGE AND TO GRAMMAR.

EDWARD WARD, COLLINGWOOD.

Education has been making wonderful advancement during the last twenty-five or thirty years, due to a great extent to the application of the principles of psychology to actual teaching in the school-room. We have now a modern history of education (or, perhaps, it should be called teaching, as the term is not applicable to all the stages) if we draw the lines according to stages and not according to dates or periods. Within the memory of many teachers of the present time the precept was "Get the knowledge, if by arbitrary memory alone"; then it became, "Get the culture, even if you do not remember anything about the subject"; but with the new education it is, "In securing the knowledge gain the culture," *i.e.*, knowledge, power, skill, and taste. It is according to this last view we wish to treat of "The Relation of the Public School Course to Language and to Grammar."

In dealing with this relation the points which will command our attention are:

1. The use to be made of the entire Public School course in the cultivation of thought and language.
2. Defining the limits of the stages in a practical course of language training.
3. The real and apparent place of "Technical Grammar" in the course.
4. Dealing with some of the advantages and disadvantages of "Technical Grammar."

1. The use to be made of the entire Public School course in the cultivation of thought and language.

It would almost seem unnecessary that this should again be brought before us, as teachers, but the mere mental acquiescence to the precept, "Pupils should never be allowed to use any incorrect

forms of speech or writing, with respect to spelling, capitalization, punctuation, penmanship, or syntax," will not accomplish the end desired.

It is now acknowledged in the light of the study of psychology that the correct use of language, whether spoken or written, is an art, but it must not be forgotten that the teaching of language is in itself one of the finest of arts, requiring constant application in the correct expression of thought. The relation we are considering includes the idea that every subject requires the use of language to express the thoughts involved, and that whatever such thoughts may be, the language should show the nature of the thought; that is, clear, definite language, if self-expressive, should show clear, definite thought, and that precision of diction reacts upon the mind, thus preparing it for still clearer thinking, but with increased power and skill. Every lesson in any subject should become a part of the child's training in English. If *all* teachers could be led to believe this and apply it to the entire course at every opportunity, might we not reasonably expect that the average pupil during the school course would have learned the art of speaking and writing his thoughts clearly, correctly, and with a degree of force and elegance.

The reports of the Minister of Education from year to year show that a very small percentage of the Public School pupils ever attend the High schools, and it is of the greatest importance, therefore, that those who have not the opportunity of the High School course should be prepared as fully as possible for true citizenship. Prof. Hinsdale says, "Ability to express one's thoughts clearly, forcibly, and with a degree of elegance, is, perhaps, the highest test of mental culture. It is the slow-maturing fruit of real culture. Pains should be taken to create an interest in the work and an enthusiasm for it, while it is a subject for instruction that will last the pupil through life." If the close of the Public School course were a stage in the language-training of the majority of pupils, as it is with those who attend the High schools, the responsibility of the teacher would not be quite so great. This not being the case, how essential that the pupils should have gained such a power of expression as to create an interest that will cause them to continue the study of the subject all through their life as citizens.

2. The limits of the stages in a practical course of language training.

As so many excellent works supplying material suitable for

training in language have been published, it will be necessary under this heading merely to point out the order in which the work should be introduced, noting that the selection is to be made according to a stage of acquisition of the pupils and not because pupils are in a certain class. It is not by teaching occasional language lessons according to some particular method that we may expect success in this department, but in having the pupils master each stage, and keep in constant practice in all preceding stages, to be properly prepared for advancement.

In all stages it is assumed to be the duty of the teacher to see that the environments of the child are such as will tend to develop ideas and thoughts. We cannot refrain from quoting here again from Prof. Hinsdale's writings, where he states, "A normal mind, when it comes into relation with an appropriate object, perceives or thinks just as spontaneously as a normal finger smarts when thrust into the flame of a lamp." Observe that it is first, automatic; second, volitional; and as imitation is the first manifestation of the will, this is evidently the teacher's opportunity. The same author just quoted, in speaking of imitation, says, "It determines (1) whether the child shall talk like a man, howl like a wolf, growl like a bear, or bark like a dog; and (2) whether he shall speak the English, the French, or some other language; and (3) whether he shall speak this language with purity and propriety, or with dialectical, provincial, or family peculiarities of form, pronunciation or accent."

Those schools which have the advantage of the Kindergarten course are highly favored, as they supply environments suitable for child thought. In most of schools, however, the age is between five and six years, and at this age the children have acquired a store of knowledge, and a store of spoken words to express that knowledge, so that this has to be taken as the starting point, and the teacher's first duty is to utilize these mental possessions.

In tracing the relation of thought to expression the stages will be seen to be:

(1) Expressing ideas and thoughts by form, *i.e.*, drawing.

(2) Expressing ideas by words, *i.e.*, speech and writing or printing.

(3) Expressing ideas and thoughts by means of phrases and sentences.

(4) Changing the forms of words to express a different meaning.

(5) Selecting the words, phrases, and subordinate clauses which express the different ideas in a sentence. No technical terms are to be used either by the teacher or the pupils.

(6) Grouping expressed thoughts, that is, forming paragraphs.

(7) Grouping paragraphs, that is, writing a formal composition.

(8) Selecting words, phrases, or clauses, expressing the ideas which form the basis for subject, predicate, and each part of speech.

(9) Technical Grammar.

If we are to take advantage of the pupils' mental possessions, they must be set to work as soon as possible, expressing by form what they have seen. In the first stage the process of the mind is *outward*, or self-expressive ; in the second and third it is, as it were, putting ideas and thoughts under or into the words and phrases. The fourth stage is merely practice in observing the change in words or phrases to express a slightly different idea. All except the first may be included in what may be called the mechanical-mental stage of learning to read, and after this the pupils begin to get ideas and thoughts from the printed page or to read in its true sense.

It is not possible in a short introductory paper, to discuss the teaching of reading in detail, but suffice it to say that the expression of a complete thought, instead of an idea, with proper enunciation, articulation, pronunciation and expression, has a very important bearing upon the development of thought and language.

The fifth stage is intended to train the pupils in finding the relation of expressed ideas in a sentence without burdening them with terms. The sixth stage takes the sentence as the ultimate unit of all speech that expresses thought; and although good sentences may not always result in good compositions, yet there cannot be good compositions without good sentences, therefore this may be considered the starting point, and the paragraph and essay will follow in proper order of development.

The eighth stage forms the basis for the introduction of Technical Grammar.

Before leaving the subject of language lessons as leading to formal composition, we wish to refer to the means to be used in the school course for the purpose of thought-getting, as nature studies, object lessons, story-telling, reading and here we wish to emphasize the fact that schools should be well supplied with suitable elementary reading-books in all grades, increasing in difficulty from the lower to the higer grades, and, as in the stages in the course, not one is to be left off in proceeding to the other, but continued throughout the entire course. Bring the children continually in

contact with nature that they may find tongues in trees, books in the running brooks, sermons in stones, and good in everything. Then, by models, imitation, practice and criticism, as Radestock says, "by the aid of one of Education's trusty servants—the formation of habit—finally build the bridge uniting theory with practice, by changing dead knowledge into living power."

Let it ever be kept before the mind that a recitation in any other subject, outside of the regular language or composition exercise, if allowed to pass without criticism, may undo all that a set exercise in language has accomplished.

Also, in the written work, certain rules of criticism must be enforced; for example, those relating to the use of capitals, and the punctuation of the expressed thought, so far at least as the correct sense is concerned. The idioms of the language and purity of diction can only be made a habit with the pupils by continued practice; and propriety, precision, and beauty of diction, as well as rules for the construction of sentences, and figures of speech, belong to the psychological elements of rhetoric, and must be learned through the constant reading of good literature, hearing good conversations, and resorting faithfully to rules and corrections.

3. The real and apparent place of Technical Grammar in the Course.

On account of the great diversity of opinion respecting this part of the subject it was thought proper to introduce it for discussion. It is only a few years since it was resolved by an important educational association, "that Technical Grammar should be omitted from the Public School curriculum, except so far as it can be taught incidentally in a thorough course of Practical Language Training."

It has been stated also in this association that Technical Grammar could be introduced incidentally with advantage to all pupils, from the beginning if a right course of language training were prescribed and followed; another, that it should not be introduced until pupils are promoted to the Fourth Reader. The Regulations place it for pupils of the Third Reader. In the face of these conflicting opinions, it will be well for us to consider carefully, especially for the sake of the less experienced teachers, what is its real place in the course, and here we would state that it is assumed that the proper course of language training in observation of meaning, form, change of form, and reason for that change of form, has been fully carried out and understood by the pupils so far as clever expression

of ideas and thoughts are concerned. Referring to the stages it will be seen that there is sufficient practical work to the Third Book; also, experience teaches that even with the aid of the more scientific methods of teaching all subjects, observation has been greatly strengthened in the pupils. Still, it cannot be expected that pupils of a lower grade than this are prepared to grasp the general idea, as it is now a classification of forms which express ideas and thoughts, or the relation of internal objects is a step above the study of the relation of external objects, with which language first begins.

We may add here that, although the course in grammar may be said to begin with the Third Reader, only the teacher whose mind is in actual contact with that of the pupil, can say when apperception of the general idea by the pupils, in particular cases, may be brought about. It is of the utmost importance, therefore, that the necessary abstractions shall be made before the technical term is applied, or we shall have terms without meanings, or with partial or incorrect meanings, which is as gross an error as teaching at first *words* without *ideas*, but in these latter cases the injury is greater as the term has been applied in a science.

4. Some of the advantages and disadvantages of Technical Grammar.

Under this head we shall not attempt to defend the use of Technical Grammar as a means of teaching the art of speaking and writing correctly in the first stages of language training, but contend that if taught as a stage in the course in its real place, it serves as a great aid in strengthening the pupils' idea as to the correct use of language in many cases, also an important step in explaining some passages in literature.

The strongest argument in favor of its being taught lies, however, in the benefit the pupils derive from studying language from a scientific point of view; and in the absence of other regular subjects, science teaching, except as an option in the Fifth Form, should be valued very highly as a means of mental development.

Underneath the advantages we may particularly note:

(1) Its disciplinary value in dealing with general relations, derived from comparison, abstraction and generalization of the functions of the elements of sentences.

(2) Using the technical term supplies a means of centralizing thought and keeping apart the results of analytical work. How necessary, then, that the general idea should arise from the proper abstractions, as a single word is now to mean as much as all the

abstractions, and to serve as a vehicle in which they may be carried.

John Stuart Mills says: "The principles and rules of grammar are the means by which the forms of language are made to correspond with the universal forms of thought."

If the mind act according to the rules of logic, then expression should correspond with those rules, and grammar being an analytical subject, the pupil should find the ideas in the sentence in their proper relation to each other; and grammar, in its practical form, may be said to be the study of the relations, meanings and distinctions of words, phrases (including idioms), clauses, and sentences.

It cannot be denied, surely, that a pupil must have a more definite idea of the thought if he be perfectly clear as to the relation of the ideas composing it, and must be in a better position for constructing a similar sentence should he need it in self-expression.

The disadvantages will be seen to arise not from the proper study of the subject itself, but from its too early introduction in the course, the use of terms for which no clear discrimination exists in the mind of the pupil, the use of too many terms, and the perusal of false definitions, or those which are only partially true.

If possible there should be an agreement amongst grammarians that a certain term should be applied, and no other term used, so far at least as the beginners are concerned.

In the language course, as indicated, the pupils have been selecting ideas in three forms—words, phrases and clauses—and should now commence with the sentence as understood in language.

A sentence is the proper expression in words of one main thought, with or without one or more modifying thoughts. The pupils are now to study the sentence as the botanist studies the plant, or the geologist the earth's crust, or the zoologist the animal. If this were kept in mind many difficulties would be removed. Those who have not had the results desired, we ask their careful thought upon the course here indicated.

The aim of the course and its treatment should be to lead the pupils to be skilful in thought-getting, self-expression and self-criticism, thus opening the way to the highest attainments in speech and composition.

REPORT OF DELEGATE TO DOMINION ASSOCIATION.

G. M. RITCHIE, TORONTO.

Mr. President, Ladies and Gentlemen,—In giving you an account of the Dominion Teachers' Association, held at Halifax last August, I have tried to confine myself to that phase of it which strictly belongs to school work, though I cannot refrain from speaking of some other things that were to be seen there during the time it was in session. The Dominion Teachers' Association does not meet annually, but every second or third year as may be considered advisable. Last year was the third meeting of the Association. The movement in favor of a Dominion Association began in Montreal in 1889, where the first meeting was held in 1892, with Hon. G. W. Ross, President, and abont 450 enrolled members. The next meeting was in Toronto in 1895, which meeting was entirely subordinated to the Ontario Teachers' Association. Last year the meeting was held in Halifax, where about 800 members enrolled, and at some of the meetings there was an attendance of 1,400. When such interest can be roused in a remote corner of the Dominion, it shows what might be accomplished in a more populous centre.

The next place of meeting is Ottawa, with Dr. McCabe of the Normal School as President. The general plan is much the same as that of our own Association—several departments, and general meetings. The reason I appear before you to give an account of it is, that I had the honor of being sent to Halifax as the only representative of the Public Schools of Ontario, and the following is the reason for that fact. At a meeting of the Board of Directors after the session of the Ontario Education Association last year, a letter was read from the Minister of Education to the effect that the Government had set apart a sum of $200 for the purpose of sending delegates to the Dominion Teachers' Association, asking the Board to send names of those chosen to go. The Minister thought that not more than six, nor less than four, ought to go, considering the amount of money. He wished also that other names be sent as alternatives, so that if one could not go another might. The Board decided that the names of the President, Secretary, and Director of each Department be sent in that order of preference. Our worthy President could not see his way clear to

accept, and wrote me that he would like me to go, as I was next on the list. After some consideration, I decided to go, as I had never been over the road before. There are six departments in the Ontario Educational Association, but only five were represented. The trip down and back by rail and boat was most delightful, and the Government might well consider the advisability of sending a number of teachers east and west across our Dominion to study the geography thereof, personally, for the benfit of the schools. To read about the French style of living, farming, and building is very well, but to see it makes a more lasting impression, to say the least of it. I have given several geographical talks to classes since on the eastern part of our Dominion, and found no difficulty in keeping up the interest of the pupils. The first meeting of the Association was held in the evening, where addresses of welcome were given by the leading men of Nova Scotia and Halifax—the Lieutenant-Governor, Attorney-General, Premier, Mayor of Halifax, and President Forrest, of Dalhousie University. Replies were made by the various Superintendents of Education from the different Provinces. This meeting, as well as all the evening meetings, was held down town in one of the opera houses, or Academy of Music. At these meetings some most excellent addresses were given, and the citizens attended in large numbers as well as the teachers. During the day the various departments held their meetings in Dalhousie University, and there, as here, the Public School Department was by far the most prominent. It would be impossible to give any adequate idea of the work done in the various departments, but it was strange to notice that much of their school arrangement differs from ours, and a curious incident occurred in the proceedings when a speaker was introduced, who immediately proceeded to give his address in French, which was probably only understood by one-third of those present. One feature of the meeting was an exhibition of work from many of the schools—excellent drawings from still life, science illustrations, mechanical drawings, kindergarten and other advanced school work from the Truro Normal School; a very fine display of Common School work from Summer Street and St. Mary's Girls' schools; but the most valuable exhibit was one of almost all the experiments in Gage's Physics, shown by apparatus constructed wholly by the pupils of the schools. There were speakers from the United States who gave accounts of their results of many things in their own schools which we are still only

talking about; for example, manual training in schools. Mr. Robertson, LL.B., of St. Catharines, read a paper in which he gave an account of the development of the Educational System of Ontario. The following resolutions give some idea of the views of those in attendance at the Convention:

1. Resolved: That in view of the beneficial results which have followed the establishment of chairs of Pedagogy in the Universities and Colleges of Great Britain and the United States, this Association strongly recommends the Universities and Colleges of the Dominion to make provision for the teaching of Pedagogy.

2. Resolved: That a committee consisting of the Hon. G. W. Ross, T. Kirkland, M.A., of Ontario, with representatives from the other Provinces, be appointed to consider and report on the establishment of a Central Bureau of Education of Canada.

3. Resolved: That a committee consisting of W. J. Robertson, LL.B., Ontario, with representatives from the other Provinces, be appointed to consider and report on (1) the universal use of the decimal weight and measures; (2) the simplification of English Orthography; (3) the general introduction of a distinctly legible phonetic shorthand.

4. Resolved: That this Association recommends that the school day immediately preceding May 24th, be set apart as "Empire Day," and that the Departments of Education in the Provinces and Territories be respectfully requested to arrange for such exercises in their respective schools as will tend to the increase of a sound patriotic feeling.

5. Resolved: That the hearty thanks of the Association be conveyed to the citizens of Halifax for their many courtesies and kindness to its members, and to all those who had helped to make the visit of the delegates enjoyable.

6. Resolved: That this Association recommend that in the engagement of teachers, good character, graceful manners, broad and accurate scholarship, and professional skill determine the selection, rather than the consideration of low salary.

Altogether the meeting was a success, even beyond the expectations of the promoters. The majority of those present were from New Brunswick, Prince Edward Island, and Nova Scotia, with representatives from the other Provinces. The city upheld the reputation for Eastern hospitality. Pleasure steamers took the members all about the lovely harbor and summer resorts, while excellent refreshments were served on board. The citadel and

dock yards were open at all hours for visitors, and the finest sight of all was Her Majesty's ship *Renown*, where special arrangements were made for members to visit and be shown through the ship.

The city is of course English, and is also distinctly military and naval. Many interesting places are to be seen in and about the city; as some one has said, "the place is alive with grave-yards," and some strange old tombstones as well as granite monuments are to be seen. The city is very different from our Western cities. Magnificence and squalor are to be found side by side in the buildings, and grandeur and primitiveness in the carriages on the streets; but I am digressing, and will conclude by reading an item which appeared in one of the Toronto papers, written by a visitor there, which gives a graphic description of the place, and is very true.

Almost every visitor to Halifax carries a camera, although the fog interferes somewhat; but as soon as one enters the citadel or ship, he is requested to leave it with the caretaker until going away. I secured many good views in and about the town, and may sometime convert them into limelight views.

THE NEWSPAPER IN SCHOOL.

JAMES S. ROWE, MARKDALE.

The newspaper of our day contributes in such a degree towards moulding of public opinion that it has occurred to me, and doubtless to many others here, that might it not be made to contribute towards preparing our pupils for the battle of life? Newspapers are, in the main, exceedingly practical, and that is the class of education that is being called for in this practical age. I am not sure that the masses know just how to read their paper. If not, then let us teach our pupils how and what to read. With these few introductory remarks, then, let me make one or two suggestions as to the manner in which the newspaper might be useful in supplemental reading.

ENAMORED WITH FOREIGN TOPICS.

Papers are brimful of attractive reading, the product of men exceedingly ambitious in their work—men who come in contact with all phases of life. Papers contain interesting accounts of current events which will be relished by our pupils. What girl will not be interested in reading the account of the coronation of the Queen of the Netherlands; and show me the boy whose eye will not glisten while listening to the story of the military movements around Santiago de Cuba. Read such extracts as these to your pupils, and call upon them to reproduce the narrative in their own words. Compare this exercise with a synopsis of some of the lessons in our readers, and if it is your first experience, there is a great surprise in store for you. In fact,

SKETCHES OF CURRENT EVENTS,

properly presented, will have more weight in arousing interest than a dozen lessons from almost any other source. In this connection, too, it will be advantageous to associate with these current events, items of past history. For example: suppose to-day's paper gives an account of the movements of the "American" army in the Philippines. Having discussed the islands, the people, commercial relations—having talked over these topics, then, I submit, is the time to associate past events with the present. Questions like these will then be answered: "What relations has England had with Spain?" "What with United States?" etc. Out of this conversation should come such topics as "Spanish Armada,"

"Revolutionary War," "War of 1812-15," "U. E. Loyalists." Thus linking the past and the present together will be found one solution in helping to arouse the pupils' interest in the history lesson.

A COMMAND OF LANGUAGE.

Again, newspapers will increase pupils' vocabulary; by words, too, of ordinary life, words he will use. They will familiarize our pupils with the current events of their own and of other lands. Generally speaking, the paper will not be wanting in teaching the boy that after all his is the best country in the world—not a bad doctrine for either the boy or the paper.

Many of the stories and short biographical sketches found in newspapers will prove valuable aids to the subject on the school programme. The boy who reads the newspaper will be able to tell you more about Cuba and the Philippines than his text-book gives.

SCRAP-BOOKS FOR SCHOOLS.

Personally, I have found that an excellent "scrap-book" can be made of clippings from the newspapers—scraps of poetry, items of trade and commerce, parliamentary terms and procedure, biographical sketches, municipal government, pictures of men of our times, etc.

Many objections will undoubtedly be offered—that newspaper reading injures one's memory, that it is only superficial reading, that certain papers are too sensational. Teach the boy that certain newspapers are to be shunned as he would the measles, that he is to read good papers just as he would choose a good book. The

QUESTION OF POLITICS

may creep in—so much the better if it does. Teach the boy not to be narrow-minded; not to allow any newspaper to decide questions for him; that he is to read both sides of all questions and decide for himself. When the editor finds that his readers are weighing great questions themselves, he will lessen his zeal in the abuse of those, who, fortunately or unfortunately, fail to see things in the same light as he does. The lamb and the lion may then lie down together, and the lamb will not be inside either.

As to the method of providing the paper for the school, I leave that as a matter for each individual teacher—"where there is a will there is a way." However, it might be remarked that trustees might do more good by providing a daily and one or two magazines for their pupils than by purchasing some of the apparatus peddled by agents who prey upon the unwary.

ARE OUR PUBLIC SCHOOLS TRAINING GOOD CITIZENS?

W. I. CHISHOLM, M.A., PAISLEY.

It is the right and the duty of the state to maintain a system of Public Schools, not for the making of scholars, but for the training of its youth in the essentials of good citizenship? As to what these essentials are most of us are agreed.

Let us consider then, in the first place, the extent, if any, to which these essentials of citizenship are lacking among our people. Owing to the present constitution of society, we do not expect our citizens to measure up to ideal standards. Yet, if we compare the citizens of Ontario with those of other states, there is certainly much for which we should be profoundly thankful. Many foreigners who have had intercourse with our people consider them industrious, reliable, unusually well-informed, and above the average in morality. We may, in a measure, be deserving of such reputation. Unfortunately, however, it is only too evident to careful observers, that, notwithstanding our good reputation and the spread of education, there are many sad facts which reveal us in none too good a light.

In the first place, if we may believe the testimony of many of our "old folk," children's manners have declined. Noise, they tell us, and contradiction, impertinence, and general "cheek" are more prevalent than in former generations. The conditions of life, however, have greatly changed since the days of our grandfathers. Some say that the change is in the parent, and not in the child—that parents, owing to these changed conditions, are more afflicted with irritability and high-strung nerves than formerly—that our youths do not make more noise, but that we endure it less easily.

But, coming to a more serious subject: Is there a laxness in morality? A few years ago, an experienced judge, speaking from the bench during the trial of a young culprit, took occasion to point out that the prevalence of juvenile crime was not chiefly owing, as some have supposed, to the importation of waifs from old-world cities. On the contrary, he said that a careful study of the question had convinced him that, to a very large extent, our young criminals were Canadian born and bred, and that many of them were Public School boys who had received a fair education.

The inference was that, in the matter of moral training, our schools were not succeeding to the extent they might.

It is pleasing here to note that, according to the recent "Report on Jails, Prisons and Reformatories," crime in Ontario is on the decrease. The report shows a large decline in the number of persons committed during the year 1898 as compared with the preceding year. There was, however, an increase in the number of boys under sixteen years of age committed. The number committed for crimes against the person was considerably less than in any previous year for the past twenty-two years. The committals for crimes against property was larger than in any previous year except in 1888. Committals for crimes against public morals and decency were fewer than in the preceding five years. The committals for drunkenness were the fewest ever known. The uneducated represented but 17 per cent. of the total; the intemperate, 64 per cent.

This report, while containing some favorable features, still furnishes much food for earnest thought for those who are entrusted with the training of our future citizens.

While acknowledging the faithful work which our teachers have been able to accomplish in the formation of sound moral character in their pupils, I must say that my own observations, as a teacher, are, that moral training does not receive anything like the attention which its importance demands. Concrete examples of the lack of such training are almost too numerous to mention. Many of our pupils are seriously lacking in regard to truth, and honesty, and the property rights of others. We see this in the school-room as well as out of school. Parents themselves are largely to blame for this. Their own morality is often so lax that they think little of the matter if their children, often from sheer thoughtlessness, help themselves to what does not belong to them; and these same parents feel much aggrieved if the theft is called by its right name. These children find their mischievous pranks and vandalism so often tolerated that they go on thoughtlessly to greater destruction of property.

These practices show their natural consequences in after life in the public and private conduct and business methods of many. We find exaggerations and falsehoods in business transactions. We find many public men who have little regard for the promises which they have solemnly made. We find men false to a sacred trust by selling their votes for money. We find witnesses in our

courts of law who can be bribed, and jurors who will perjure themselves. Our election campaigns, if we may judge by the number of protests and by the corruption revealed by the courts, are a curse to our country, engendering social bitterness and strife, and moral confusion and degradation.

I do not wish to take a pessimistic view of the present condition of our society. Our people, as I said before, are among the most law-abiding, temperate, industrious and intelligent to be found anywhere. Candidly, however, it can scarcely be denied that many evils exist among us which are inimical to our truest interests, and which all true lovers of our country would like to see remedied.

What can we do more than we are now doing to counteract these evils and thus raise the standard of citizenship?

The regulations of the Department require the teacher "to inculcate, by precept and example, respect for religion and the principles of Christian morality; and the highest regard for truth, justice, love of country, humanity, benevolence, sobriety, industry frugality, purity, temperance, and all other virtues."

To be able to conform to this regulation, which is of more vital importance than all the rest of the teacher's work combined, two conditions are absolutely necessary:

1. That the teacher shall, in all cases, be fully competent, by reason of personal character and mental maturity, to inculcate such virtues effectively.

2. That the necessary time and opportunity be given for doing the work.

With regard to the first condition, it must be said, in justice to our teachers, that, notwithstanding the facility with which certificates are obtained, many, very many, of them are men and women of high personal character, whose influence in moulding the characters of their pupils has been freely recognized.

A difficulty in the imparting of moral instruction is that there is no fixed framework of principles, as is the case in arithmetic, or other subjects. In order to teach ethics effectively, the teacher must *know* ethical principles; he should have the ability to apply them to life's problems, and he must have a deep sympathy with the learner. It is here where the young teacher usually fails. The greatest of care, then, should be exercised in safeguarding the fountain-head or source of supply of teachers. Is this precaution sufficiently observed by our present system?

I think it may be said, with little fear of contradiction, that the

employment of so many young teachers constitutes one of the most serious defects in the working of our Public School system. According to the Minister's latest report, about one-half of our Public School teachers are teaching on third-class certificates. A large number of these are, no doubt, under twenty-one years of age, and hence necessarily immature in thought and character. I do not mean that youth and immaturity are a reproach to their possessors, but that they are serious disqualifications for the duties and responsibilities of a teacher.

These teachers are willing to teach on very low salaries. Last year the average salary of female teachers, not including cities, was $254, a decrease of $17 since 1887. The average salary for male teachers, outside of the cities, was $32 less than it was twenty years ago. Underbidding and other unscrupulous competition drive from the profession many good teachers who would have liked to have remained in it; but, seeing no future before them, they are obliged to seek other callings, while the young, the inexperienced, and the immature take their place. Many of these make teaching a stepping-stone to something else. The result is the degradation of the profession in the estimation of the public. The teacher's remuneration should be relatively as good as that of other professions, and it will be only by making it such that the best minds can be attracted to it. It is surely, then, a very short-sighted policy on the part of parents and school boards to barter away that which is to the highest interests of our future citizens for the sake of a present but false economy.

Another tendency, and I say it with all respect to our lady teachers, and one which bodes no good to the profession, is the ever-decreasing number of men who are making teaching their life-work. A reference to the Minister's latest report shows that in 1867 the number of female teachers was about 42 per cent. of the total; in 1877, 53 per cent.; in 1887, 64 per cent.; and in 1897, 70 per cent. Last year there was a decrease of 36 males and an increase of 158 females. Apparently the time is coming when possibly more than 90 per cent. of the elementary teachers of Ontario will be women; and the great majority of these, if present conditions prevail, will be young teachers of limited experience. It is safe to say that not 25 per cent. of these will make it their life-work, and that the average teaching period of the remainder, for obvious reasons, will not extend over from three to five years.

Moral training, as at present imparted, is chiefly incidental. The

personal influence and character of the teacher, therefore, counts for much as a factor in securing moral results. If, then, the teachers are, in a large measure, young and inexperienced, and if the men leave the profession for others more remunerative, educational results will not be what they should. Any cause which tends to lower the status of the profession, will, by a sure but natural reflex action, produce injurious results in the character of training given in the school.

But even supposing our teachers to be fully competent for their work, do they not find themselves seriously hampered, in what is regarded as their highest work, by the lack of suitable time and opportunity for discussing questions of right and wrong? We examine our school programmes in vain for adequate time and place for anything in the nature of ethical training. We have a superabundance of provision for the cultivation of the intellectual faculties, but little for the consideration of problems touching conduct and character.

This condition of affairs is exaggerated by the false but popular view that examinations are the tests which reveal the character of work done by the teacher. This view is so generally accepted, and so many teachers are compelled to conform to it, that I sometimes seriously question whether the education of to-day is so well adapted to turn out successful men and women as the education of years ago. There are too many studies, too many examinations, and too much cramming for examinations.

There is another practice in our schools which fails to draw out, to the fullest extent, the best latent energies of our pupils. I refer to the tendency to make everything *easy* for them. There are too many methods so-called. I do not mean to condemn methods in themselves, for there must be methods, and good methods, in teaching everything. What I mean is that there are too many "cut-and-dried" methods. The individuality of the child is largely lost sight of, and he is not given sufficient opportunity at school for prolonged and individual effort. In our graded schools especially, it seems to me, that our teachers teach too much—or rather talk too much. Would it not be much better if our pupils were left more to themselves, given less recitation and more opportunity for independent work?

Another matter just here. Notwithstanding strong and repeated condemnation of the practice of self-reporting of marks, etc., by the pupils, the system is still prevalent in most schools in some

form or other. There is not the slightest doubt that it is one of the most fruitful sources of dishonesty and untruthfulness in the school. The spirit of emulation and competition characterizes most of our pupils, and advantage is taken of it, and rightly so, in stimulating them to greater effort. Much more care, however, should be taken by teachers to guard against placing undue temptation within their reach.

Our programme of studies is overloaded. Certain subjects should be either abolished altogether or greatly modified, to remove the congestion. British history and technical grammar might be mentioned. At present the former study is a serious tax upon the child's time and energy. In the majority of cases, it engenders a positive dislike for the very name of history, and on the whole is barren of results. It is time for a change, and the country is ripe for it. Technical grammar, as a training in language, is acknowledged by many thoughtful observers to be a complete failure. A course of simple language lessons would probably secure much better practical results.

If the programme of studies were modified somewhat, there would be more time and opportunity for incidental moral teaching. There are numberless incidents occurring in ordinary school life which furnish the best texts for talks with the pupils, when the wrong or injury is fresh in mind.

Perhaps the greatest defect in our educational system is the home department. The relation between the family and the school is not what it should be. Parents do not take the interest in the school that they should, and the teachers do not, as a rule, take enough interest in the child's home training. We have only to look about us to see how hopelessly unfit many parents are to give their children a careful home training. As a result, the children are neglected, and worse. If parents, especially mothers, only knew their power, and realized their responsibilities, how the work of the teacher would be facilitated. A general revival of home education is the greatest need of the times.

In teaching patriotism, a note of warning may not be out of place. Teachers, in their zeal for the "new patriotism," should not overstep the mark by instilling a loyalty which is nothing but national selfishness or conceit, tending to create dislike or distrust for other peoples. While thoroughly believing in our own "manifest destiny," we should cordially recognize the good that is found in others. It is only by so doing that we shall become

a truly broad-minded and intelligent people. Above all, teachers should see that the teaching of patriotism will be practical enough to seek to safeguard our political institutions against the evils of bribery and corruption, which was revealed to such an alarming extent during the recent elections. Our pupils should be taught the sacredness of the ballot-box, and how base and how unworthy of the privileges of citizenship is the man who will sell for money that which has cost patriots the sacrifice of so much blood and treasure.

Space will not permit of the discussion of other matters in connection with this subject. In conclusion, I would say that I have endeavored to point out some of the characteristics of good citizenship; and while acknowledging the comparatively high state of our society in many respects, I have ventured to point out some existing evils which are detrimental to good citizenship. In dealing exclusively with the attitude of the Public School towards them, I have endeavored to show that anything which tends to lower the status or professional spirit of teachers, or anything that hampers them in teaching morality, will seriously affect the character of our future citizens.

THE RELATION OF ART TO THE OTHER STUDIES IN EDUCATION.

J. W. MILNE, ODESSA.

By art, or rather drawing, we mean the processes through which thought is expressed by picture. Art has many mediums for such expression, but the best adapted to the school-room are pencil, pen, and black or colored washes, or crayons. The medium is of little importance; the spirit all important.

Heretofore drawing has been taught as an end in itself—of use only to those whose pursuits in after life require it (or, perchance, as an accomplishment, in a ladies' school), but not related to the other studies.

As a means of æsthetic culture its value is recognized, but only a few are supposed to be endowed with artistic spirit enough to profit by it. "Artists are born, not made," meets us at every turn. I should like to re-write that "artists are born, *then* made," and we, of the public schools are assisting (or hindering) the making of Canada's future Reids or Challoners. Though all may not be great artists, all are born with some art activity which we should foster and develop.

Some acknowledge the training power of art, but avoid teaching it on the ground that there are more practical studies which possess like advantages.

Few are there who look upon drawing as a process of self expression. Prejudices are hard to overcome, even among teachers. "I can't draw," "I never can learn," is often heard from those who would severely frown upon a pupil for similar remarks on grammar, etc. They acknowledge their inferiority in one faculty of the mind but would be loath to do so in others. And when teachers view drawing from this point how can we expect parents to look upon it with favor?

The "specialist" in drawing is another great cause for the failure in the proper correlation of art and the other studies. Many artists are not teachers and cannot apply the principles of teaching which are used in the other subjects. Such specialists have had the shaping of some of our drawing courses, and, consequently, such courses are for the adult, not the child; no wonder many pupils, teachers and inspectors are discouraged.

The artist must be a teacher or the teacher an artist. The latter is fraught with the greatest possibilities, and drawing will be properly taught only when the teacher appreciates the artistic merits, the spirit and feeling of the picture. There must be correlation of studies and no specialization: as well specialize spelling or composition as drawing.

Drawing, as said before, is a means of expressing thought. If the full meaning of this be grasped there will be found no difficulty in placing it in proper relation with the other studies or in teaching it. As a means of expression drawing is as useful as spoken or written language, and more valuable for expressing form and color; no arbitrary signs are to be learned before using it.

How expressive, how full of meaning, a child's drawings are! How his own ideas are expressed—how he puts himself into his picture! Some think that because he does not express the thought of an adult or as perfectly as one he should not draw. As well not speak or write because his syntax or pronunciation is faulty.

Soon after the teacher takes charge of him this self-expression of the drawing is lost. Why? In many cases it lacks development. Other methods of expression are cultivated and drawing is neglected. Soon the child loses, through inactivity, this method of expression. He prefers those in which he is most proficient because of their use. Other teachers will not allow their pupils to draw until they know how. Then, after years of copying pictures and other drudgery, if self has not been crushed out, he is warranted in beginning where he left off years ago. If self is crushed he is told that he cannot draw, and he is then a recruit in the vast army of those who say they can never learn to draw. He cannot use drawing as a means of self-expression and is precluded from enjoying to any great extent the work of other artists.

How to give instruction in drawing so as to nurture and develop the spontaneous power of expression is a problem that has occupied the minds of educators for some years. The most distinct advancement in teaching this subject was made when educators recognized that the power to draw, as every other power, exists potentially in everyone, and if put to use in the proper way will develop, no matter how feeble at the beginning. The problem is, then, how to proceed to produce a healthy development. A study of the child-mind will show the proper course. We have been administering to children doses of drawing more fitted for matured minds.

Man, in his primitive state, after supplying his wants, indulges in some spontaneous activity which gives him pleasure—scratching on

his war-club; he delights in his power, and distributes these dashes and dots evenly. This is the beginning of decorative art. Spencer says: "Man's ideal life expresses itself in, and is nourished by, free spontaneous action, which in the lower grades of being may be termed play, but in the higher results in art." Prof. Sully says on the same point: "Drawing shows itself in its essential characteristics as a spontaneous, self-taught activity of childhood, which takes its rise in the play impulse;" and again, "A child's first attempts at drawing are pre-artistic and a kind of play." Froebel takes the same ground.

The child, getting suitable material, scribbles—deriving his pleasure from movement or sound, marking frosted glass, furniture, etc. This is called mischief, but really is play that is to develop into art. Where material is found for him the furniture is less marked. Where sloyd is practised the desks will be less carved.

Soon the child associates impressions or ideas with his scribble, yet no likeness between thing and sign. A chance likeness gives delight and discovers his power; and the child tries to draw the thing suggested by the chance picture. Any association made by the teacher, suggested likeness between thing and sign, is wrong. The child draws from his own concepts. The form or image has its origin in the child's mind, not in the teacher's, and the child draws at this stage entirely from concepts. It is easier, and his concepts must be strengthened by observation.

When the child first arrives in school he should be allowed the same freedom of expression as in his home. He should not be hampered by the teacher or the drawing-book. I can conceive of nothing more harmful than the frame-work in the Kindergarten Drawing Books and No. 1 of the Public School course. Lines, as lines, angles, circles, etc., are foreign to the child; he sees them nowhere in nature, and they possess no interest for him. Sequences in paper-folding and pease-work are sequences too advanced for him. He gets good from handling the material but not from making complex forms or weaving intricate designs. Color work should also be unhampered. After the child has been taught the recognition of the primary colors, let him draw the picture of some object that he knows is red, yellow or blue, and then he may color it. "His drawing will be crude and his coloring wretched," says one. Of course it will; but to get even an approximately correct expression, adapted to his age, etc., is all we ask for the time. His drawings must be corrected by observation and compared with the object; thus they reinforce each other.

The child's first year in school should (in drawing) be directed largely by the child—making pictures which he interprets for his teacher. These pictures are bases for language lessons, reading lessons, etc. There is no better seat-work for a young pupil than drawing. It is a play; and if we can turn a child's play to account let us do so. Before much progress is made his work may be such as this, "Draw a picture of something you saw while coming to school," or illustrate a story told him; but no copy work yet. With this kind of drawing we teach him something of the science of the subject. In order that the child may have some basis of reference, we place before him the type solids—the sphere, cylinder, and cube. To assist him to systematize his knowledge of form from the multiplicity of forms, we place before him standards. He has seen many objects approaching nearly the ideal type in each, and he recognizes their likeness and difference. They are now no longer isolated objects. He knows that the underlying principle of representing each set is the same. If the child understands and from observation learns the principles which are exemplified in the drawing of types his drawing of other objects will be corrected and his concepts truer.

In the second book class the study of the types is continued. Drawing as a means of expression is not neglected, and more advanced object drawing is taken up as home work. Constructive drawing, mapping, drawing to a scale are introduced, and correlate drawing, arithmetic and geography, pictures of customs and manners of distant peoples are shown to assist in geography and educate a taste for drawing.

In the higher classes the same course is followed. Pictures of historic subjects assist geography and history, and much good is done for drawing if the works be copied from good artists, the pupils may be inspired by the same feeling which inspired the painter.

Decorative drawing and architectural drawing should also be studied in these classes. The chief features of the different styles of architecture give a better idea of the prevailing styles and open a new world to the child in the idea of home, school and church decoration.

Each pupil should learn to recognize the different mediums of the artist and to distinguish them one from another, so that chromos may not masquerade as oils. They should know oils, pastels, water-colors, and distinguish them from prints; and in prints should know copper-line engraving from wood-cut, and either from an etching or a zincograph.

PRESIDENT'S ADDRESS.

A. H. MUSGROVE, WINGHAM.

Ladies and Gentlemen,—At the outset permit me to thank you for unanimously electing me to the honorable position of President of this section of the Ontario Educational Association, and I trust that I may be able to discharge the duties of the office in a manner satisfactory to you all.

I am pleased to see so many present at our annual meeting, to meet familiar faces, to welcome old friends and co-laborers in the great work of education. There are present many, who, for several years, have regularly attended our meetings, and who have given much of their valued assistance in making our sessions interesting and instructive. We trust that they may long continue to give us the benefit of their wide experience, sound judgment and mature wisdom. To those who are present with us for the first time we extend a hearty and cordial welcome, and we trust that you may derive much benefit from being here. My earnest wish is that, when our proceedings shall have been terminated, we may all return to our respective homes strengthened and encouraged, and with a more earnest zeal for the interests of education, and a greater love for the teaching profession.

In looking over some of the many able addresses delivered by my predecessors in this office, I find that many of them referred to what we, as an Association, had already accomplished, and, moreover, they called attention to what it was yet desirable to attain. I think I cannot do better than follow in their footsteps.

The report of the Committee on Resolutions, appointed at our last meeting to wait on the Minister of Education, has been prepared, and will be submitted for consideration. Not all of the suggestions made by your committee were favorably received, yet we are encouraged to continue expressing our opinions and doing all we can to have desired changes made. Much care should be exercised in dealing with resolutions submitted by local associations. All such resolutions should be carefully considered by this Association before being submitted to the Minister of Education for consideration and adoption.

The suggestion that there should be a committee of the General Association to consider all resolutions to be presented to the Minister of Education, is a good one, and steps should be taken to have such a committee appointed.

The question of raising the age limit of teachers to twenty-one years, is still unsettled. Two years ago a resolution was unanimously passed by this Association, expressing the opinion that the time had arrived when the age limit should be raised to twenty-one years. The Minister of Education, however, did not see fit to concur in that opinion, nor does there appear to be any indication that this very desirable change will be made in the near future. The law prohibits citizens under the age of twenty-one years from voting. Contracts entered into and conveyances made by minors, are void in law. When any of our young ladies and gentlemen undertake the important responsibilities of housekeeping at a tender age, there is much comment and adverse criticism made by those who disapprove of immature and inexperienced youth undertaking such grave responsibilities. Our schools, however, are committed to the care of immature and inexperienced teachers, who, at such a tender age, must, of necessity, make many mistakes, because they lack that sound judgment and discretion so necessary in the management of children. A profession that requires extraordinary penetration, infinite wisdom, and a knowledge of that most mysterious of all things—the human mind—should have its portals carefully guarded.

By the abolition of the Primary, and the substitution of the Junior Leaving as a qualifying examination for Third-Class Certificates, together with the addition of the languages to the Junior Leaving course, the age limit will necessarily be raised; besides, this change will prevent many, who would otherwise enter the profession through the Primary, from entering at all. The opening of an additional Normal School at London will, doubtless, cause the Normal term to be lengthened. As a result of these changes we may look for a diminished supply of teachers, and a corresponding increase in salaries, and the added tendency of greater permanence in the profession.

Much has been said about the cost and the frequent changes made in the text-books, but, notwithstanding all this, it is time that our present list of text-books should be revised. Many of them are not text-books in any sense of the term. With a suitable text-book the pupils in some of the more advanced classes would be

able to prepare their lessons to some extent at least. With our present text-books it is impossible for them to do so. They must depend for everything upon the teacher. They can do but little for themselves, and, as a result, all independence and self-reliance is destroyed. The pupils of the present age want everything told, analyzed and explained. Nor can we much blame them, as, with our present text-books, it is almost impossible for them to do much of themselves. Our Readers, especially the more advanced ones, should have placed at the head of each lesson a list of the principal new words in the lesson, properly defined. A few questions based on the lesson would be an assistance to the pupil. The derivation of the more common Greek and Latin derivatives would be of great advantage. The principal prefixes and suffixes with their meanings should also be given. Lessons suitable for narrative composition should be topically arranged. Our Readers would then be of some value and assistance as text-books. There would be no necessity for increasing the size of the book, as there is too much matter in the present Readers. Neither of the text-books in Geography is satisfactory. One book, the size of either, would be sufficient for all classes in both our Public and High schools. The Public School Geography does not cover the ground for the Public School Leaving, hence pupils in our Public Schools are compelled to purchase both books. Both Geographies are deficient in good plain maps of the several countries of Europe. This absence is much felt when teaching British History. The text-book on Temperance might be vastly improved by having a tabulated summary of the contents thereof placed at the end of each chapter. The Public School Arithmetic is not suited to the requirements of the Leaving pupils. The Appendix contains problems much too difficult for that class. Were the History arranged topically it would be a much more useful book. Subjects are taken up, dropped and resumed, sometimes at the close of a paragraph on some other subject. The whole story of the rebellion of 1837 should be rewritten.

The Public School Leaving examination was designed to aid and benefit our Public Schools. It has amply fulfilled the expectations of those who were instrumental in having it established. There is no reason why it should be discontinued or materially changed, even if it does to some extent interfere with the classification and working of our High schools. The majority of the pupils who pass the Leaving never attend a High School, and as it is purely a Public School matter its effect upon our High schools should have

but little weight. No person objects to parents sending their children to a High School as soon as they have passed the Entrance.

The grants made to the Continuation classes will no doubt benefit our larger Public schools. The distribution of the grant might be more equitable, but no doubt this will in the course of time be changed. It has been suggested to me by teachers of Continuation classes that we should form a new section of this Association for such teachers. My own opinion is that we are sufficiently sub-divided. I am of the opinion that if the general committee mentioned above were formed it would be able to do all that is required. However, the question is one for this section to deal with, and no doubt you will give the matter due consideration.

And now, having dealt with matters more immediately affecting us in the practical details of our work, I desire to direct attention to some other topics which, to my mind, demand the most careful and earnest thought of all those who are interested in the welfare and future progress of our fair Dominion.

Whilst much has been done to improve our educational system to increase the efficiency of our schools, whilst our teachers are better qualified to perform their important duties under improved methods of instruction, and whilst in addition to all this there is a widespread desire for education, yet there appears to be a decline in other directions.

First among these I may mention is that growing tendency of the youth of this country to strive only for that which for the moment is pleasing and exciting—not that there is anything wrong in this in itself, but it should not be made the chief aim of life to the neglect of all sound instruction and earnestness of purpose. If I were to designate this age by a suitable name I should call it the "Giggling Age." Only that which amuses and causes a laugh is listened to. Excellent libraries are to be found in almost every locality, magazines and papers of every kind are within the reach of all, yet how few of our young men and women avail themselves of such golden opportunities of pursuing a course of reading that would be of immense advantage in after life.

The influence of a good literary taste is of great value. To a young man away from home, friendless and forlorn, in a great city and amongst strangers, the hours of trial are between sunset and bedtime. It is the hour when there should be a family reunion, but to the young man away from home the approach of evening

brings a sense of loneliness and desolation, and his sympathies and desires for companionship often lead him astray. A taste for good reading will save him. He will remain at home and spend his spare moments with the great men of the past. A love for such writers as Shakespeare, Tennyson, Scott, Dickens or Eliot has often saved a young man from destruction and ruin. What can we do as teachers to create in our pupils a desire for good, wholesome literature that requires application, judgment and reflection?

There has also been a decline in that respect for authority and law so essential to true manhood and good citizenship. This is seen in the home, in the church, in the school and on the street. The law of the land enforces duty to the state; church duty is enforced either by pure religious sentiment or by public opinion; the teacher, assisted by the law, enforces duty to the school, but submission to parental authority must be enforced in the home.

Many parents strive earnestly and prayerfully to train their children to be modest and manly, grateful and affectionate, obedient and respectful, honest and trustworthy in all things. The result of such training is apparent as the child develops into manhood; it is seen in the school, on the street and at home. In many households, however, this duty is sadly neglected. Many children come home for food, clothing and shelter, but for pleasure or amusement they go elsewhere. The boy who is on the street till midnight, subject to no restraint, permitted to follow his own devices, will assuredly educate himself. He may shun the influence of his parents, but he will be subject to other influences, vulgar in action, profane in speech, vicious in principle and base in their motives. Even when at home the child's respect and reverence for authority is destroyed. Home is not to him a home in any sense of the word. It is merely a public place—there is no secrecy, no family union, all is open to the public gaze, thus the home loses its power. Parents are to blame for this. They do not realize their terrible responsibilities; they permit their children to hear too much discussed at home. The minister is spoken of with disrespect, the teacher is ridiculed, their most intimate friends are lightly spoken of, business men are charged with fraud and dishonesty, and so the child grows up with the idea that all of these are unworthy of respect and obedience, hence all love for authority is destroyed. How is a child trained under such conditions to make his way in life? The fruit of such training soon appears; school life becomes irksome; restraint is galling; grudgingly he submits to authority, the

soul of the teacher is vexed; the parents are unable to do anything, they have long ago lost control, and so the boy quits school. Soon he leaves his home; but, possessing neither habits of industry nor any dignity or seriousness of character, without one redeeming trait to serve him in the hour of trial and adversity, he is unfit to battle with the world. Unfitted for steady employment and continued effort, he drifts from place to place, and finally closes his career among strangers in a strange land.

Besides what I have already mentioned, there has also been a decline in that old sense of British "fair play" in contests of all kinds. In the past men strove for the mastery by all fair means and with all their powers of mind and body—they won honestly and fairly, accepted defeat with dignity and good grace. In either victory or defeat they were gentlemen. A victory was a source of real pleasure because honestly won; a defeat served only as a stimulus to further exertion tending to increase efficiency and skill. Sports were healthy athletic exercises, strengthening and developing the physical and mental powers, and tending to make men self-reliant and manly.

In the present age the chief aim in all contests and trials of skill is to win at any cost. Defeat is a disgrace not to be endured, no matter how skilfully the game may have been played.

As a result of this our amateur sports are demoralized. The mere pleasure to be derived from a fair contest is lost sight of in the baser desire to win. The manly games of foot-ball, lacrosse, hockey and base-ball are no longer friendly contests between the residents of neighboring villages, where opponents met and parted as friends. The love of victory has introduced the worst features of professionalism. Outsiders, of whose character and morality nothing is known, are introduced into the game. Our young men are contaminated, and the spectators are treated to most debasing exhibitions of brutality and unfairness.

How are we to remedy this state of affairs? How is this evil to be rooted out? As teachers we should at all times impress upon our pupils the principle of honesty and fair play in sport, to be satisfied with the result, whether in victory or defeat. The press should discountenance all such games. The public, on whom the managers depend, should refuse to aid them in any way. Parents should not permit their boys to take part in any game where brutality and vice are present. In this way our amateur sports may be redeemed from their present degrading features, and again

be such that all may patronize them, and where our boys may be safe morally, and, shall I say physically ?

These to my mind are some of the topics which urge themselves upon our attention. Incomplete and imperfect as I feel this address to be, I cannot venture to trespass further upon your patience and good nature. If I have suggested anything which in the course of time may take root and grow, my efforts will be amply repaid. In conclusion, I trust that at the close of this session we shall have accomplished something towards advancing the interests of the teaching profession, and that we will feel conscious of having given our best thoughts to the cause in which we are engaged.

THE ELEVATION OF THE STATUS OF THE TEACHER.

E. W. Bruce, M.A., Toronto.

The chief cause of the present low status of the teacher, I think, is the lack of *active* interest of fathers and mothers in the subject of education. The cause next to this is the low money valuation that is placed on the services of the teacher. Its compensation represents the value placed upon those services by the community.

Then, again, there is the lack of professional spirit. Teaching, at the present time, is not a profession; and education, in this province, will never be what it should until the professional rights of the teacher are recognized, and until his social position is the same as that accorded to the professions of law, medicine and divinity. The opinion of the teacher is not treated in the presence of the child, with the same respect accorded to the opinion of the doctor and the minister; and the teacher's calling is no more and no less than what the public sentiment of the community makes it.

Two other causes, I would mention, are the lack of permanency, and that teaching is so generally a stepping-stone to many other and more lucrative positions. The ease of entrance and exit has become proverbial.

Many remedies could be mentioned for the elevation of the status of the teacher. The present age limit should be raised. The limit of eighteen years means that the Government puts the practice of teaching into the hands of immature boys and girls, not more than a year, or at most two, beyond the age of the carpenter or the blacksmith's apprentice. These latter, too, have the further advantage of serving an apprenticeship of from three to five years with a master mechanic of their chosen trade or calling. Not only does the embryo artisan acquire the art of fashioning the metals and shaping the material that he has to deal with; but during the period of such apprenticeship, he acquires the traditions which govern the practice of his handicraft, when he has been graduated as a master mechanic. He now belongs to the guild of skilled workers, jealous as any of maintaining the dignity and worth of his calling. He, in turn, is careful to instil into the minds of his apprentices a due regard for the traditions and dignity of his calling.

Wherein is the position of the teacher analogous to that of the artisan? Our third-class teachers are the mere apprentices in the world of teaching. But unlike the artisan apprentices, they have to serve their apprenticeship alone, unaided and unguided by the wisdom and professional spirit of those who are the master craftsmen of their calling.

To place the embryo teacher in the same favorable position as the embryo artisan, we would suggest that before he be licensed to teach he should serve at least one year's apprenticeship under the guidance and instruction of a teacher of tried and proved ability, not only one who imparts instruction well, but also one who has proved himself to be possessed of the true spirit of a teacher and one impressed with the dignity of his calling. This will be a guaranteee that the new teacher who has entered the pedagogic field, shall have the power to impart what he knows according to improved methods, and shall enter upon his work with some idea of his responsibility in maintaining the dignity of that calling in which he seeks to earn a livelihood.

How shall this arrangement be carried into effect? No person can be in a better position to give effect to this suggestion than the Public School Inspector. The inspectors are the people who have to supervise and report upon the work of all Public schools. They know where the strong teachers are located. They are the most anxious that all work done within their inspectorates should be of the highest possible character. And should the Board of Examiners determine by resolution that no student teacher shall serve his apprenticeship within the limits of the school district in which he resides, the teacher who has to report upon the practical work of the student will be largely freed from any annoyance from the parents or relatives of the candidate, upon whom he may have to report adversely.

Let us now deal with the question of age limit. This Association has repeatedly recommended that the age limit for entrance be raised from eighteen to twenty-one years, which request has not yet been acceded to. Surely the ground for refusal cannot be that of a lack of supply. At the present time there are available a sufficient number of teachers to furnish the schools for the next ten years, if not a single certificate were issued during that time. But there is no danger of this, for the Normal Schools at Toronto and Ottawa annually license about four hundred teachers, while the Normal College at Hamilton licenses one hundred more—a

number which would renew the entire staff of Public School teachers every twelve years. To add to this number, a third Normal School will shortly be in operation in London with a licensing capacity of two hundred more. Under these circumstances no one will claim that there is any danger of a dearth of teachers from raising the age limit to twenty-one years.

It has frequently been asked, "Is teaching a profession?" To which I would answer emphatically, No. What are the ear-marks of a profession? First, a proper appreciation of the dignity of the calling in which the individual is employed. Secondly, the possession of such a spirit with reference to that profession, as would prevent a licensed member from doing that which would be derogatory to the dignity of the profession. Lastly, and most important, the control by that body itself of all who seek admission to its ranks, with power to discipline those guilty of violating its code of ethics. Who will claim that any stripling of eighteen can be fully impressed with the professional spirit? So long as the ranks of teachers are recruited to the extent of twelve hundred and upwards annually, at the low age of eighteen years, recruited from those who by law are called infants and who are put in the same irresponsible class with lunatics, jail-birds and inebriates, the teacher's calling will remain as it is.

Can teaching be raised to the dignity of a profession? Let us ask any of the older members of the dental profession. Twenty years ago, almost anybody with audacity enough might call himself a dentist and establish an office for his practice. The first step in advance was made when the requirement for admission was fixed at the High School entrance standard. Even this met with considerable opposition for a time, but there was no threatened dental famine. Again, the requirements for admission were raised to a third-class certificate, the academic work was vastly increased, the time for learning the profession was extended, and a minimum of practical work was exacted. Later again, the requirements for admission have been raised, with a corresponding increase of academic and practical work.

As a result, the dentist to-day occupies a position, socially and professionally, immeasurably in advance of that of twenty years ago. The public receive better and more intelligent service, for which they are willing to pay, knowing that for the increased remuneration there is value received. If this desirable result can be obtained in the profession of dentistry, there cannot be any valid

reason why a similar procedure should not attain a similar result in the line of teaching.

In this suggestion of mine, that the teaching body should have the power to license those who are to engage in teaching, there is no ground for alarm on the part of aspirants to the teacher's calling, nor to the public who may have to employ the teachers so licensed. We would be only following the good example set us by the medical profession, the legal profession, and that of divinity. Nobody will claim that these callings have become close corporations, manipulated in the interests of a fortunate few on the inside. Nobody has claimed that these professions have fallen off in efficiency because these bodies themselves hold the power of determining who may and who may not have access to their ranks. Nor has it been charged that the public have suffered at the hands of these several professions, because of excessive charges imposed by the members thereof. There is this advantage, too, when any member of these several professions is guilty of conduct unbecoming the dignity of that profession, punishment swift and adequate is sure to be meted out. Then cannot teachers be entrusted to manage their affairs as wisely as the Medical Council or the Benchers of the Law Society?

I would now desire to touch upon the ease with which an aspirant may enter upon the calling of teaching, and to point out, at the same time, the very small sacrifice a teacher makes on quitting the ranks of teaching for any other walk in life. Under existing regulations the young man who has matriculated in Arts, in law, or in medicine, has at the same time fulfilled all the requirements, non-professionally, of the calling of a teacher. He needs nothing further than to put in a perfunctory attendance of three months at a Model School to receive a teacher's license for three years, which in many cases may be extended to five or six years upon the recommendation of his inspectors. In other words, we practically invite every matriculant in the professions named, to enter into competition with the already licensed teachers for three years at least.

Again, when teaching has served his temporary purpose, he makes no further sacrifice than the money spent in his three months' Model School course. How does this sacrifice compare with that of the doctor or the lawyer, who desires to quit medicine or law to engage in some other occupation? When we consider the five years spent in acquiring their professional equipment, together with fees for tuition, examinations, etc., we are safe in

saying that an investment of $2,500, at the very lowest, has been voluntarily surrendered. And as we usually value a thing at the price that it costs, we need not be surprised at the small number who sacrifice themselves on the altar of their country, that they may serve their fellows in the calling of teaching.

To emphasize this feature, it has been repeatedly asserted without contradiction, that the average term of the teachers now engaged in the Public schools of Ontario does not exceed four years and three-quarters.

How would we meet this state of affairs? There are many ways, of which I shall give a few. In the first place we would differentiate the teacher's examination from that required for admission to any of the learned professions. To go into details would be beyond the scope of this paper. We might instance the single subject of psychology. It is a well-known fact that the head-masters of the Model schools are a unit in desiring that the subject of psychology should form part of the non-professional equipment of all students entering the Model schools. It would thus leave the head-masters free to deal with applied psychology only.

In the second place the teachers' examination differs from the matriculation in being a final one. The matriculant is merely asking permission to continue his studies in the wider field of arts, law, medicine or divinity. Should he succeed in entering with an attainment below what is advisable, his shortcoming is sure to find him out before the completion of his course. But the teacher is beginning his calling with a maximum of attainment, and should that be insufficient for the efficient practice of that calling, the public and the pupils have to suffer so long as he continues to teach, and the whole body of teachers have to suffer in the public esteem for his lack of efficient equipment. I would strongly recommend the raising of the pass mark required for a non-professional certificate, and, for that matter, for a professional certificate, too. It would not at all seem extraordinary that for the purpose of teaching a minimum of fifty per cent. should be exacted in every subject with a total of two-thirds on the whole. In these two ways we shall have emphatically separated the teacher's examination from that required to any of the learned professions.

In the third place we would recommend that the subjects of reading, writing, spelling, drawing and geography be continued to the end of the teacher's course. The candidates for matriculation

may be safely excused from these subjects. No one certainly can complain that he who aspires to teach these subjects, should have a greater proficiency in them than the man who uses them merely for his own personal needs. These are the subjects which our inspectors tell us, day after day, are the subjects most poorly taught, while the business public, with justice, complain to the same end.

These would sufficiently differentiate the purely teacher's examination from that required for matriculation, and would be sufficient along with a year's apprenticeship suggested, to keep hundreds out of the teacher's calling who now make it merely a stepping-stone to what they regard as a higher and more dignified calling, namely, a profession.

Let me now briefly review. I have spoken of the lack of active interest of fathers and mothers in the subject of education. I have referred to the low money value placed upon the services of the teacher, and that this compensation represents the valuation placed upon these services by the community. I have pointed out the lack of professional spirit, and have in a measure indicated a remedy therefor, by placing the licensing of teachers in the hands of the teachers themselves, with power to discipline similar to the Medical Council and the Law Society. I have suggested that the age limit should be raised. I have further suggested the apprenticing of teachers as the most efficient means of increasing their usefulness, and at the same time adding to their professional spirit. I have also indicated the evil arising from a too easy entrance and have suggested a differentiation of the teacher's examinations, together with an increased minimum requirement for admission. If these were fully acted upon, the complaints of lack of permanency, and low salaries, and the making the teacher's calling a stepping-stone to the professions would be very largely met.

In conclusion, I would suggest that the Executive of the Public School Department prepare a report for submission at the next meeting of this Association, indicating the line of differentiation of teacher's examinations; and secondly, that they confer with the Executive of the General Association as to what steps should be taken to make the teacher's calling a profession.

KINDERGARTEN DEPARTMENT.

DOES THE EDUCATIONAL AGENCY WHICH WE CALL "THE SCHOOL," ADEQUATELY MEET THE DEMANDS OF SOCIAL PROGRESS FOR THE RECOGNITION OF THE INDIVIDUAL?

MISS MARY ADAIR, PHILADELPHIA.

We believe that the increasing complexity of our educational machinery is in the line of *Social Progress*, but whether it serves the best interests of all concerned depends upon the relation of the parts to one another and to the whole. . . . School life cannot be foreshortened into a single term, and no teacher can do good work in the present except by consciously preparing the child to meet the demands of the future. . . . Is there a conscious intelligence on the part of those who have the educational machinery in charge as to the true meaning of education? Is it, as Herbert Spencer says, "preparation for complete living"? Is it "the gradual adjustment of the individual to the spiritual possessions of the race"? as Nicholas Murray Butler says. If it be true, as Mr. Froude insists, that "education means also the equipping of a man with means to earn his own living," do we, as teachers, realize that the best training for citizenship and for earning a living is *not* specialized skill in some kind of trade? Real training is that which helps a child to gain the power of self-initiative, the capacity for doing, and the ability to adapt himself to many and changing conditions.

Another expert in pedagogy says: "Try to make the child master of as many processes as possible, both mental and motor. Stimulate the impulses to use these processes in carrying out original ideas. Acts may be forgotten, ideas may vanish from the mind, but the processes by which those acts were performed will remain. The associations and habits arising from them will be determinent factors in shaping the life of the individual."

But now comes another question. Is it possible for a teacher to

do effective work who is in total ignorance of processes of thought, associations and habits which have already shaped, in some degree, each individual life? Ought a teacher to investigate as far as possible, not only the actual thought-processes of a child so far as his surroundings will explain them, but also the determinent factors of heredity? Such exploration of a child's mind requires much time and thought, but the study of individual characteristics is especially important for teachers of the younger children. In later grades, the youth becomes able, by speech and attainment, to interpret himself. It is a child's inability to explain himself which makes the work of the Kindergartner and the Primary Teacher so difficult, and yet so vital. In some of the more progressive schools a plan of individual record is being tried. The best system I have seen is that now in experiment in the B Street School, San Diego, Cal.

This seems a step in the right direction, and would naturally result in securing more attention to the individual, but to carry out such a plan implies on the part of the teachers deep insight into human nature, and understanding of the work and nature of each grade. . . .

Generally speaking, Educational Theory supports the claims of the individual; it is Educational Practice that is belated. . . .

Man is instinctively free: his proof of freedom, his individuality. As man is instinctively individual, so, too, he is instinctively social. The strongest impulses we have are the desires to separate, to differentiate, and the opposite desires which grow out of social feeling. The balance of these forces produces the *Social Individual.* It is most important that educators should understand the unity underlying these seemingly opposing forces. . . . In this fact of individuality, as in other things, man seems to repeat the stages of lower life. How plastic is the human being at first! He come to the world with an individuality of sex, color, size, type, etc. He has not chosen to be black, brown or white; to be male instead of female, but has taken by compulsion the individuality determined for him. But very early, though feebly, he begins to react, and what we call education is simply the assistance given to human beings in their movement upward from individuality which *separates* to individuality which *unites.* The evolution of such institutions as the family, civil society, the State, and the Church. mark the steps of this upward movement, and these planks of human nurture are the foundations of our educational systems to-day. . . .

Each child represents in himself a whole *trust fund*, where the accumulated stock of ages is to be invested and made the most of. No child has power or wisdom to handle this himself; and who is to blame if he finds, when he comes of age, that his stock is depleniished and little or no interest gained upon the original? Does he go bankrupt through life and *we* suffer no loss? Well, perhaps not consciously, and yet, so closely is humanity bound together, that *one* cannot fail in a jot or tittle of his power and *all* life not be somewhat the poorer. . . . It is in the beginning of life where adjustment is a matter of such slow experience, that we need almost infinite knowledge and patience.

Of the three aspects of human life the physical is, of course, the easiest to understand, yet how many parents really understand the laws that govern bodily development? How many study the problems of food, clothing and temperature, as these affect the growth of bones, muscles, brain and nerves? And yet every parent who undertakes the care of a child's body, undertakes, also, to nourish his mind and soul.

> "There was an old woman, and what do you think!
> She lived upon nothing but victuals and drink;
> Victuals and drink were the chief of her diet,
> And yet this old woman scarce ever was quiet."

And if Mother Goose's old woman couldn't be contented with victuals and drink, how could we expect it of the children who have just come, "not in entire forgetfulness . . . from God," with cravings for light, colors, sounds and shapes, with passionate hungers for beauty, for activity, for love. Truly, "Man cannot live by bread alone."

But the child must be helped not only *to live* but *to live with others*. Sociology teaches that the practice of all the virtues is necessary for a complete social life. In the family, the child's first world, he finds the division of labor, the sharing of duties and responsibilities, and laws which demand the subordination of the individual to the good of the whole. These are lessons which even a baby should begin to learn. And if these lessons are not learned in the home and the school they will *never* be learned. The hand that rocks the cradle had need to be strong and capable. . . .

We dare not claim for education more than its due, but we must claim for human beings that they have a right to stronger, more

beautiful and more capable bodies than most of us possess, and to have more intellectual power and finer, nobler souls, trained to love the good and will the right. . . . Let the purpose be to develop in the child the capacity to furnish himself with knowledge. Stimulate the desire for culture; train executive ability and power of self-government; help the child to do and be all he has power to do and be. This is the service we can render to the State. The nation is made up of individuals, and the teacher helps make the individual. . . .

The fact that higher life implies *variation*, warns us that diversity in the subject must be met by diversity in the means. The physical variations in the school-room are more easily understood than the mental, but they are sufficiently appalling. We cannot expect equal application in the fragile and the robust. The appeal to the phlegmatic child over-stimulates the nervous one. Knowledge of the effects upon blood and brain of fatigue, anger, pleasure. etc., alter the programme and the school discipline to some extent.

In his "Story of the Mind," J. Mark Baldwin gives helpful suggestions as to different mental types and their treatment. . . .

The hypothesis before us is that a child must be *an individual* before he can become *social*. He learns to say *I* and *mine* before he can say *we* and *ours*. To help him to say *we* is the beginning and end, the centre and circumference of human education, and the true destiny of humanity.

No being can become social without *willing* to be so; therefore, in this part of our discussion, we are mainly concerned with the development of the will. In the evolution of character no element is so essential as the will. It is that in him which makes self-surrender possible. Amiel says: "Self-interest is the survival of the animal in us. Humanity only begins for man in self-surrender."

Equipment for the work cannot be gained from books alone. We must study life as it appears in the world about us. . . . The schools of to-day are the factories where the men and women of to-morrow are being made. Playing in their games or bending over their desks are our future statesmen, ministers, lawyers, doctors, artists, teachers, fathers, mothers, employers, employees. What is the best that can be done to make *these* ready for the work that is before them? It seems very commonplace and sentimental to say, "Cultivate sympathy," and yet this is the answer that really covers the situation. Sympathy is the one condition absolutely necessary for a life with others. It is the incentive to all high activity. We

shall discuss briefly the forms of sympathy which bear directly upon the creation of the social individual, viz., imitation and imagination. Through these two channels the will acts in assisting the individual from the little world of self to the larger world of life about him.

Imitation helps the individual to get into touch with life by copying it. Notice a little child clap his hands and smile when you do. . . . So strong is this intensely social activity that a child left to himself is in danger of losing his own individuality entirely in his desire to become like his environment. But he must *not* be left alone. Education steps in to arouse the instincts which keep the balance, the desire to be separate and different. We must stimulate originality, or he will be of little use to society. We have to admit that education has failed here; the really original person is rare. Most of us follow a leader, and for many use and wont is law. Having no real conscience, these live by the standards of those about them. Ruskin tells of a boy saying, "Father, I could have robbed a till to-day, but I thought you would not like it." The father says: "My boy, you must not rob tills, even if you had no father to care"; and so Mr. Ruskin continues, "We should do right because it is *right*, even if there were no Father in Heaven." The only hope for a true national conscience is the development of an individual personal conscience, and for this teachers are in a great measure responsible. The strongest formative influence for character during a child's school life is undoubtedly the *personality* of the teacher. "As the snake and fox are making the world into snake and fox, and Peter and John are making the world into Peter and John," so each teacher is stamping her personality upon the children. If she is not ideal, then so much the worse for the world. There is a Scylla and Charybdis for the school in the fact of the teacher's personality,

> "The little more, and how much it is;
> The little less, and what worlds away."

If she has too much force, she is an autocrat. The children copy her manners, think her thoughts, and regulate their conduct by her conscience. Having too little force does not improve the situation. Nothing could be worse for children than association with an adult personality too negative to make an impression. Namby-pamby people have no business in work where souls are being made. The wise teacher studies herself as a part of the school environment.

To get the key to Nature's method of balance, one must understand the human mind. If sympathy runs too strongly in the line of imitation, what is to be done? Quicken imagination. Change the view from the near to the far, from the low to the high. Of these two forms of sympathy imagination is the noblest and, presumably, the most social in its effects. We could not know even of the existence of other human beings except for imagination. It is the creative faculty making possible the world of ideals, of beauty, art and culture, and binding man to man through discovery and invention. Hawthorne says that "men without imagination are only apologies for men, like poor horses with blinders who can only see the narrow path of a single point of view." Imagination puts us in the other man's place, so that we can get his way of looking at things. Society depends upon the fact that human beings have confidence in one another, and every analysis of faith finds imagination at its root. How could there be "a substance of things hoped for, an evidence of things not seen," but for this power? How much more productive the school curriculum might be, and how self-active the children, if teachers would take imagination into account! Instead of learning words, words, and figures, figures, in history, geography and arithmetic, a real, *lively* interest in persons, places and things could be awakened. Of course, we all know that it is possible for imagination to be very busy and create nothing but visions, and dream nothing but dreams. But true creative imagination implies a trained will by which the "airy nothings" become actual and possible "habitations and names." . . .

But, you say, it is very well to have ideals, and not so easy to put them into practice. This is true. In some localities it is impossible; for often we find the educational machinery that ought to inspire the teacher, only a brake and a drag. We must do our duty in the present and bide our time. "The new generation treads on the heels of the old." This boy, and that, now playing at community life, will be the directors of the educational organizations of to-morrow. We dare not quarrel with the present, when we consider our own part in shaping the future. But, while we accept present conditions with as good grace as possible, we may sometimes ask ourselves, Does the School *we* represent adequately meet the demand Social Progress makes for the Individual?

TRAINING DEPARTMENT.

A NEEDED CHANGE IN THE POLICY OF OUR TRAINING SCHOOLS.

A. B. SHANTZ, CALEDONIA.

Almost every county and provincial convention of teachers proposes some remedy for the lamented, and year-by-year more hopelessly downward trend of the financial and other interests of teachers; many of these proposed remedies, such, for example, as raising the age qualification, increasing the non-professional requirements, and lengthening the periods of professional training, are very good in their way, but are superficial, and do not reach the great cause of the state of affairs to be remedied. After having carefully considered the question for a number of years I have come to believe very strongly that the great cause of most of our troubles as teachers is to be found originally in the paying with public revenues for the purely professional, or in other words, the wage-earning training of teachers; which to my mind, the longer I consider it, grows more and more to look like downright pauperizing of a profession which considers itself honorable, respected, and equal, if not superior to, the other learned professions.

To understand any present condition of things it is generally necessary to investigate the history of it; so in this case I shall attempt to state how it came about that teachers receive so much financial aid in their professional training. At its inception it was considered an essential part of State education that the State should provide teachers having the proper qualifications. In an old country possessing established educational facilities, this would mean simply examining and awarding certificates to those already qualified by training and experience to do the work of teaching. But in a new country like Ontario with practically no schools and an almost entire lack of properly qualified teachers, it would and did necessitate the establishment by the Government of schools for giving the required qualifications to the necessary teachers.

In those early days when, owing to the newness of the country,

the chances of making money in almost every walk in life were abundant and enticing, it was found necessary to do more than offer free tuition in order to induce young people to become teachers; and it may be surprising to many but it is a fact that the Government actually made weekly cash allowances toward the expenses of students while attending the Normal School. When I first discovered this fact I was glad to think that it is not generally known and that the days of pauperizing the profession were over. With commendable self-respect I prided myself on the fact that I had paid my own expenses while at Normal School; but it was the pride that goeth before a fall, for it required very little further thought to bring home to me the disagreeable fact that while I had certainly paid for my board, books, and other incidentals, I had not contributed one cent toward the expenses of providing and maintaining the Normal School. The Government, that is the general, public, had paid and were paying for the building, equipment, instructors, and even examiners. In other words, the many other classes of the community who had had to get along without any aid from the Government, had been called upon in addition to pay the whole cost—not merely a part of it, but the whole cost—of providing teachers with a means of earning their bread and butter—and that is about as much as many of them can afford nowadays. In fact, many teachers finding themselves unable, owing to the congested state of the profession and the consequently ruinous competition, to provide themselves even with bread and butter, have made painful and in many cases ignominious exit from this glorious and honorable profession of ours, and have begun life anew in untried ways of earning a living. To my mind, therefore, this policy of paying for the professional training of teachers with public money is a two-fold injustice. In the first place it is unfair to the general public, and in the second place it is much more unfair and vastly injurious to those that are thus prevented from enjoying the privilege of paying their own way, and so being able to respect themselves as the equals of any others, no matter of what calling in life. However, the damage to our prestige and injury to our standing as men among men is not by any means the worst result of this charitable policy of our system of education. It would in itself be enough to demand a change; how much more then is a change necessary when, in addition to our loss of standing and influence, we consider the train of humiliations, hardships and financial losses it has inflicted upon us.

So general has become the notion among trustees and the general public that teachers will meekly submit to snubs and humiliations of various kinds, that before a teacher can command respect as a properly constituted man he has to assert his manhood very emphatically. Sometimes he succeeds in convincing the Board that he is a man like themselves; but very often he only succeeds in arousing opposition and indignation at what seems to the Board unwarranted and not to be tolerated impertinence and presumption. If he persists in asserting his equal manhood he often loses his position. Is it not a fact, however, that the great majority meekly bow down and worship that great and imperiously self-important personage, the school trustee? To such an extent is this true that one feels like saying, "Is there any that has not bowed the knee to Baal?" If I have overdrawn the picture I hope to be corrected.

Now, I do not wish to be understood as blaming the trustees only for this state of affairs. In fact, since it seems to be the case that the measure of respect we receive is seldom more or less than the measure to which we think ourselves entitled and show ourselves deserving, I feel little disposed to blame the trustees at all; they treat us as we have by our spiritless and grovelling attitude taught them to treat us. Some I know will submit to no indignity; but it is disagreeably true that the great bulk of teachers have placed themselves in any but gratifying relationship to their trustees. In other words, I believe that the great majority of the teachers of Ontario are lacking in those qualities of manly spirit, professional honor and general backbone, that command for other professions the advantages which we so much envy them. This is a strong statement, but any one at all acquainted with the many small things constantly being done by teachers in their efforts to outreach each other in rude, underhanded, jostling scramble for the paltry 300 or 250 or even 150 dollars a year which the great majority with unconscious sarcasm call their salary, will hardly attempt to refute it. I shall be only too pleased to be convinced that I am wrong in this matter. I shall now leave it to discuss the cause of the predominance of this element in the teaching profession.

I have before stated that the cause of the unsatisfactory condition of the profession is the pauperizing policy of paying with public revenues for the professional training of teachers. I shall now attempt to show the effect of this policy on the quantity, and much more important, the quality of the young men and women that it draws into the profession. It is a well-known fact that to

be qualified for enjoyable, successful pursuit of any profession one requires special natural adaptation and taste for that particular kind of work. True teachers, like true poets, are born, not made; but judging by the great numbers of alleged and certificated teachers in this province at present, one might almost be led to infer that they are hatched in job lots, and that our Model and Normal Schools and Normal College are just so many pedagogical incubators. Certainly the great majority of the teachers of this province are not possessed of the natural adaptation or even the special taste and liking for the work of teaching which are indispensable to the highest success, or even, judged by proper standards, passable success. What led them to become teachers? There doubtless are many reasons, general and individual. I shall treat only the most important, because most potent of all.

Canada is a democratic country in which is being constantly seen the spectacle of poor young men, especially sons of farmers and mechanics, winning their way to the highest places in the learned and lucrative professions. Of this we are proud, and sincerely hope that the conditions in this country will ever be such as to leave the way open to the sturdy ambition of our stalwart, self-reliant young men. But I most emphatically protest against the use of the teacher's profession as a stepping-stone to more desirable positions in other professions. Such it certainly has been in the past; and why? Because a young man prospecting the possible ways of reaching the coveted position as a successful physician or lawyer is not slow to discover that the academic qualifications for teaching are simply a step toward matriculation in medicine or law, and that the professional training required is comparatively insignificant as regards the time needed, and, more important, is practically free. I have inquired of several of my Model School classes on this point, and have found that had a fee of twenty-five or fifty dollars been charged, hardly half of the students would have gone to Model School; they would have considered it wiser to invest the money directly in their ultimate profession. Many young people are sent to the Model School by parents quite able to pay their way in any profession, but who prefer to give their children a cheap start in teaching and then to expect them to work their own way up. I think then I am safe in saying that were Model School, Normal School, and Normal College students required to pay the full cost, or a large part of the cost, of these institutions, the number entering the teaching pro-

fession would be very considerably lessened in a perfectly fair and honorable manner. And, by the way, I am one of those that are decidedly opposed to a selfish hedging-in policy on the part of any profession. I say that every young man or woman ought to have a free unfettered opportunity of filling any position in any walk in life without either hedging in some occupations or bonusing others.

And with the reduction in quantity there would also result an improvement in the quality of young people seeking admission to our profession. The reason, I think, is very evident. For the purposes of my argument I shall divide candidates into two classes, the self-reliant, self-respecting, independent, charity-scorning kind, and the weak, indolent, parasitic kind, always taking the easiest course regardless of whether or not they in so doing become objects of charity. Our bonusing policy draws, literally draws, the latter into and induces the former to keep out of the profession or to get out as soon as they understand the condition of things. Cannot every Model School master or lecturer in Normal School or Normal College certify to the presence in every class of a large percentage of the parasitic species, and a deplorably small percentage of the independent sort? Any one doubting this need only watch the underhanded methods employed by graduates of our training schools to secure situations, in order to become convinced of the low average quality of our charity-helped candidates for admission to the profession.

If any one should object to withdrawing the grants to training schools on the ground that many deserving young people would thereby be prevented from getting a start in life, I shall reply that it is impossible to justify the existence of training schools for teachers, the spending of public money on them, and the requiring of teachers to attend them, on any ground but the securing of the best educational results, regardless of whether young people do or do not get help in realizing their ambitions. If it is a good policy to help ambitious young people by grants from the public revenue, why not apply it indiscriminately to every walk in life instead of confining it to one and so drawing into it the weaklings that find the conditions of admission into other professions too difficult and discouraging? Considering the nature of the work they are expected to do, intellectual, moral, and national, none but the best ought to become teachers; others ought to be discouraged. So I think that I am reasonable in coming to the conclusion that young

people desirous of becoming teachers should be expected to show that they possess the moral characteristics that would qualify them to become the models and moulders of the character of Young Canada. Taking it for granted, then, that a young man is ambitious to become a teacher, but is poor, would it not be a good test of his real qualifications for the work to let him prepare himself without State aid for his chosen work? What harm would it do a poor but ambitious young man to work with his head or hands at any honorable labor, even sawing wood or digging ditches, in order to earn the necessary funds? Would not such an experience in itself be a good preparation for his life-work by enlarging his view of life, broadening and deepening his sympathies, and developing in him that strength and firmness of character so necessary to the successful management of a school and the development of the volitional side of the character of his pupils? If the influence of teachers as expressed in the old saying, "like teacher, like pupil," is true—and who doubts it?—it is evident that a great harm has been done to the character of many of our young Canadians by having placed over them teachers lacking in the essential elements of a strong, self-reliant, respect-compelling character, and on the contrary afflicted with undoubted weakness and low quality of moral fibre.

I think it is admitted that in general things of good quality can be had only for a good price. Is this true of teachers? I think that with some exceptions it is true, and that in all probability the great bulk of teachers in Ontario are getting just about as much as they are worth. If they could get more in other spheres of usefulness they would take it. Still I believe that the low estimate placed by the great majority of teachers on their services has had the effect of compelling really deserving teachers to accept proportionately low salaries or to leave the profession. And really leaving the profession seems a much wiser and more hopeful act than attempting to reform it; for considering the predominance of the low grade element of teachers, those that do the underbidding and seem to have absolutely no regard for professional decency or even ordinary uprightness and honor, it seems as though it were well-nigh impossible ever to raise the observance of professional etiquette among teachers to even a moderately satisfactory standard. I can see only one way of doing it, and that is by excluding the objectionable element that is crowding in such large numbers into the profession. But how is this to be done? Many suggestions

have been made, but the profession has never attempted seriously to carry out any of them at all adequate. In my estimation the surest and quickest way of overcoming a nuisance is by removing the cause; which to my mind in this case is the paying by the Government for the professional training of teachers. Without this enticing bonus the weaklings would not be drawn into the profession as at present; and so the standard of professional conduct and consequently of salaries also would naturally rise to the average worth of the profession. To my mind it is a very simple problem in economics, and the remedy simple and natural.

I am free to admit that some things can be said against the carrying out of my suggestion; but I think that if the reform in the financing of our training schools is brought about gradually there need be no great difficulty. There certainly would not be any lack of teachers for some time to come; as the undesirable element disappears from the ranks of the profession it will become more and more desirable to the better class of young men and women. Besides many teachers now at other occupations because too spirited to remain in the profession under present conditions, would probably return. So I think we would hardly need to fear a scarcity of teachers. Anyway, the natural law of supply and demand may be trusted from long experience to be equal to the occasion, should it arise.

My suggestion ought also to receive the support of the general public; for, quite apart from any pecuniary advantage to teachers, something ought to be done to stop the rapid downward trend of the character of the profession and its work; and no country can long be great in these progressive times if it has teachers generally lacking in the great essentials of high character, noble purpose, fine sense of honor, and honorable, manly deportment. Therefore, on purely patriotic grounds alone, if for no other reason, teachers ought to stop the present demoralizing policy of subsidizing, and, by subsidizing, pauperizing the noblest of all noble professions, on which depends in so large a measure the welfare of the State.

PROGRESS IN EDUCATION.

(An Abstract.)

WM. SCOTT, B.A., TORONTO.

1. Much which formerly was called dullness and stupidity in children is now known to be due to some organic or other defect which can be remedied. Defective eyesight, or hearing, or growths about the nasal air passages or larynx, which are responsible for much poor spelling or reading or general inactivity, can, by proper treatment, be removed. Teachers now seek for the cause of defective work of whatever nature it may be. This being removed, the child is soon able to take its normal place with its fellows. Hence, by banishing much wrong and misery from the school-room, education has made much substantial progress.

2. Teachers are beginning to realize that what formerly was called thoroughness may be a means of developing a child into a dullard. I can recall two or three methods of teaching arithmetic which were to produce Newtons by the thousand. Mental analysis was one of these. What was an excellent training for children of thirteen or fourteen was forced upon pupils of eight or nine. Children who were marvels at nine in mental arithmetic became dull at fourteen, and most serious of all, had lost entire interest in the subject.

Then came the Grube method. For how many pedagogical sins is it not responsible? Overtraining in the primary grades results in either exhausted power or burnt-out interest, which in either case is fatal to future progress.

To-day we have number as ratio. This, so far as the child is concerned, must result in failure. A child's idea of number has no idea of ratio in it, and nothing can be gained by forcing this upon the child. The idea first in the mind of any child is a collection of ones. The ratio idea is of a much later appearance. No matter how pictorial and concrete the work of presentation may be made, as the idea of ratio is not yet in the mind, or, if there at all, is in a too embryonic stage to be of use, the results must be disappointing. It does not follow because a child can be induced to

memorize certain facts and processes that he therefore should. The result of such premature forcing of the capacity of children, and of the mechanical drill necessary to produce any apparent results, is that after a time the child ceases to grow along this line, and soon indifference takes the place of former eagerness and interest. This is aptly called "arrested development" by Dr. Harris, U. S. Commissioner of Education. "It is believed that arrested development of the higher mental and moral faculties is caused in many cases by the school. The habit of teaching with too much thoroughness and too long continued drill the semi-mechanical branches of study, such as arithmetic, spelling, the discrimination of colors, the observation of surface and solid forms, and even the distinctions of formal grammar, often leaves the pupil fixed in lower stages of growth and unable to exercise the higher functions of thought."

Under the talismanic name of thoroughness much wrong is done in graded schools. In ungraded schools there is not time for such unpedagogical work.

3. There is improvement in order and in ideas regarding order. Formerly the aim was to have a school in which a pin could be heard drop. It was the business of the teacher to bring this about. He was esteemed the best teacher who had the most orderly school from this standard. Pupils were often afraid to think there, lest they would disturb the stillness of this arctic solitude.

Teachers now know that discipline must teach the pupil to govern himself by showing him that he is a part of a whole, and that the good of the whole as well as his own requires that he shall restrain his desires and curb his will. Such teachers feel that good discipline is the foundation of all the virtues of life. They know that mere external restraint is unpedagogical: that quietness when they are present and disorder when temporarily absent is not discipline: that all worthy discipline is self-discipline, and that the mainsprings of order must be within the pupil, not external to him. With them the great problem is how to impart and develop the power in a pupil to see what is right and to follow it. They now take into account what the child meant to do. The old discipline punished for what he did. It punished for carelessness and awkwardness. The new punishes for maliciousness, which often has less glaring yet more dangerous faults. The old attended to such minor weaknesses as whispering, dropping pencils, restlessness. The new discovers the cause of these, removes them,

and as they are but the outward manifestations of an inward condition, when this is cured these petty annoyances disappear.

4. All parents and teachers have advanced in their ideas and practice regarding the inculcating of morality. Teachers know that perfect sincerity and justice are necessary to lay a proper foundation of character and to retain the child's respect for parents and teachers. In the past there was one way of dealing with the adult and another with the child. To-day teachers recognize that the same rules of law and order which are the laws of human institutions for the adult apply also to the child. Such teachers surround the child with an atmosphere of morality. Every work done, every lesson given, every speech made, is instinct with truth and sincerity. The child lives in this atmosphere. He becomes sincere, careful, accurate, courteous, truthful, in the same way he lives at all—all unconsciously. These are always about him. They pervade the entire school. He, as it were, breathes them in, and so little by little insincerity, carelessness, inaccuracy, rudeness, untruthfulness, are banished.

When this idea is fully grasped by trustees they will be much more concerned about the manners of the teacher, his mode of living, and the quality of his work, than whether he will teach for a few dollars less or more than another.

5. Closely allied to moral teaching are the effects of love and sympathy upon the child. Teachers now know that there can be no effective teaching where these are absent. They know that all teaching must be self-teaching; that their highest duty—almost their only one—is to ring the awakening bell in the dormitory of the soul of the child, and to do this they must surround the child with an atmosphere of love and sympathy. In this way only can the child be induced to put forth that effort and self-exertion essential to growth. They know there are few children or even youths so hardened by their environment but will yield to affection shown toward them—not affection in the abstract, but an abundance of it in the concrete. It is difficult for young people devoid of experience to believe that one of severe countenance, who never bestows a caressing touch, and who corrects all faults harshly, means all this for their ultimate good.

6. Teachers have more correct views of the value of Psychology in the school-room. Some years ago we were led to believe that to become a perfect teacher one had only to master Psychology. That a knowledge of the science of Psychology fails to impart the

art of teaching any subject is now beginning to be recognized; but just as it has taken years to explode the old definition of English Grammar as the art of speaking and writing the English language with propriety, so it will yet take a considerable time to convince many that Psychology will not impart the art of teaching school. As grammar helps us in criticising our own speech or writings, and hence indirectly makes our imitations of what is correct more definite, so a knowledge of Psychology enables us to criticize our methods, and renders clearer why one course should be pursued and another avoided; but to know Psychology is absolutely no guarantee that we shall be good teachers. To teach, we must have ready tact to take advantage of whatever openings into the mind of the pupil we may discover; apt ingenuity to tell us what to say and do; the power to work up such an interest in the pupil and subject that every other object of attention is driven from the mind; and the ability to awaken such a devouring curiosity as will permit of no rest until the succeeding steps are mastered. These cannot be learned from Psychology. The personal element in the teacher will always remain the dominant one. At most, Psychology will only give the means of judging of the suitableness of a device before trial and render the imitation of what is correct more certain, rapid and intelligent.

7. Child-study is in much the same position as Psychology That child-study has resulted in great benefits to the cause of education no one will deny, but not in the way some of its advocates claimed. Here the gains have all been indirect. Every teacher should study each child under his care—not in the abstract, but individually and in the concrete. Knowing the child, his home-life, his likes and dislikes, his peculiarities, his hereditary tendencies, will wonderfully aid one in dealing wisely and well with such. It will make one much more considerate, much wiser, much more tolerant of the little troubles in school, and much more forgiving and long-suffering.

8. It is now known that attention cannot be held upon a subject for an indefinite time; that the brain becomes weary; that irritability and restlessness supervene; and that when such are present the cause may not be wilfulness on the part of the pupil, but an uncontrolled and uncontrollable desire for change. The teacher arranges his time-table so that this change will come before there is time for trouble. However, writers of educational books as well as those who prepare school programmes should know that physical exercise increases rather than diminishes fatigue; that football

gymnastic exercises, military drill, produce not merely muscular but brain fatigue.

The effects of physical exercises have been carefully noted in Germany. A few results may be given: A walk of two hours induces a fatigue equal in amount to one hour's Arithmetical calculation. One hour's drill produced as much mental fatigue as the same length of time given to instruction in German. Wagner classifies school subjects according to their fatigue effects as follows: Mathematics, 100; Latin, 91; Greek, 90; Gymnastic Exercises, 90; History, 85; Geography, 85; French and German, 82; Natural History, 80; Drawing, 77; Religion, 77.

Kemsies assigns the first place to gymnastic exercises, the second to Mathematics, the third to Foreign Languages, etc. One remarkable conclusion which both investigators reached was that the teacher's individuality plays a most important part in increasing or diminishing school fatigue.

The conclusion is inevitable that physical exercise carried on with any degree of vigor does not neutralize the effects of brain fatigue, but increases it. Mosso, who has given much attention to this subject, says: "Not only does muscular fatigue react upon the higher nervous centres, but, conversely, mental activity has the effect of inducing fatigue in the muscles." Again he says: "Walking and running, cycling and swimming, are enjoyable and healthy, but are not recreation, if by recreation we mean a preparation for mental work."

So that these conclusions may not seem paradoxical to some, it must be remembered that "not all weariness is the result of fatigue." We may have weariness without fatigue, and we may have fatigue without weariness. One may feel tired in the morning, but the urgency of the work to be done compels a start, and soon the tired feelings passes away, and excellent work is the result. Fatigue cannot thus be thrown off. The attempt to do so results in disaster. Active muscular exercise removes weariness that is not the result of actual fatigue, and so strengthens the physical organism that it is better able to resist the effects of fatigue by lengthening the time it may be in active use before fatigue begins to take effect. Only sleep can repair the waste of muscle and brain-cell. Were this fact generally understood by parents, or even by medical men, we would hear much less about pressure in schools from those who allow their children to sit up, dance, or play games, in hot, stuffy rooms, thus depriving them of the only means of repairing brain-waste and muscle-waste. Is it

any wonder some are permanently stunted both physically and intellectually by such conduct?

Some of the bars to be removed before we may progress as we should are:

1. There is the prevalent notion that education is answering questions and the ability to pass examinations.

All thoughtful men know that the highest kind of work cannot be examined. How can moral qualities be tested by an examination? How can those qualities upon which success in life depend, such as the power of working with and influencing others, devotion to duty, address, manners, and the general culture of the candidate, be tested by an examination?

Is it always possible to frame questions with the result of showing who is best educated rather than who is best crammed?

Until the public are more enlightened and cease to judge the usefulness of a teacher by the number he can prepare to pass a given test, there will always be a bar to substantial education, for a teacher would be more than human who could resist the temptation to prepare his pupils in the shortest way possible for passing this test even though he felt he was doing much unpedagogical work.

2. Is not our striving for a general, uniform excellence another bar to real progress. In days gone by pupils put off much time at school. It may well be questioned if there was not more true education, more true awakening of a love of learning, in spite of the crudeness of the work, the little pedagogical insight of the teacher, and the poor equipment of the school. In those days the "lad o' pairts" always came to the front. He was not doomed to a general mediocrity by being one of a class of such. Of course there is no denying that the general average of intelligence is much higher now than formerly, but do we always find the silk purse or the gold ring, as was the case formerly? It may seem heterodox to say so, but I feel more and more that much effort is wasted upon many who would be much better to be left alone.

3. The largeness of the classes is another bar to substantial progress. To do one's best one must have high ideals. To have and to hold fast to these the teacher must not be driven too hard. He must have leisure time. In the future trustees will learn that it is to their advantage to set apart a year, say every ten, for a holiday for their teacher. The salary will be paid as usual, but the teacher will be relieved of all duties, so that the year may be spent in travel, or study, or renewing his professional ideals by attending a training school.

MANUAL TRAINING.

D. K. CLARKE, WOODSTOCK.

Mr. Clarke, in his paper, spoke of Manual Training under the following heads: 1. The existing need for something more practical in the ordinary school course. 2. The character and aims of Manual Training. 3. Its place on the course and on the results it produces as a factor in education.

1. There is need for something more practical in education which is no longer exclusively a preparation for professional life, but must be adapted to the needs of the masses. And it is owing to this long-felt need that Manual Training is being in many places introduced into the schools. At the age when character is being developed and habits most readily formed, it is a serious matter to confine pupils to what it theoretical, and withdraw them so completely from what is practical. The large majority of boys in our schools will follow some mechanical pursuit, and it is important that their school training should tell directly along the line they are to pursue in life. Often boys with little talent for literary work have a marked talent for mechanics, and this talent should be fostered and the boy given the best chance of success. There is a very great need for educated farmers and skilled mechanics, but our schools as at present constituted are designed to prepare men for the professions that are all overcrowded. The practical abolition of the old-time apprenticeship makes it very difficult to acquire mechanical skill. The public schools can help in this matter by combining with ordinary school study the practical work of Manual Training. Boys will thus become familiar with mechanical principles in general, and the acquiring of skill will be facilitated and made more certain.

2. The character and aim of Manual Training.—The essential feature of the Manual Training school is that there is combined with the ordinary studies, for boys, a course in tool and machine work in wood and metals, and special training in drawing. For girls there is a course in domestic economy and dressmaking, with special drawing also, and light wood-work, particularly wood-

carving. The course for boys usually covers three years, and may be arranged as follows: 1st year. The use of hammer, saw, chisel, plane, etc., and the lathe; exercises in drawing, carpentry, wood-turning, and simple construction. 2nd year. Drawing, cabinet-work and turning in hardwood, pattern-making and wood-carving. 3rd year. Drawing, metal-work, including blacksmithing, brazing, and the use of the various machines and tools of the machine shop. The object of the course is to develop the practical side of a boy's nature, to cultivate habits of accuracy, care and attention, and to develop a degree of manual skill and a familiarity with the elements of mechanical operations in general.

3. The place of Manual Training on the Course.—Is does not come into conflict with any of the subjects already taught, but supplements them where they lack. As every study combines utility with mental discipline, manual training in both these features is unexcelled, and so claims a place on the course on the same ground as science, mathematics or literature.

4. The results of Manual Training.—It helps to retain boys longer in school than they would otherwise remain. It enables boys who become apprentices to rise faster and higher than they could without it. It leads to a truer esteem and appreciation of all manual occupations and of those engaged in them, and hence tends to make the professional man more helpful to his fellowman, and more successful in his profession. It will interest careless boys in the general work of the school and help to make them successful. It will give boys with strong mechanical aptitudes an equal chance with those of marked literary ability. It will stimulate invention by cultivating the constructive faculty at the age when the faculties are most readily developed. It will greatly aid in the selection of right occupations in life. Under its influence we may look for homes more marked by convenience, economy and taste in all their arrangements.

ARRESTED DEVELOPMENT.

(Synopsis.)

S. B. Sinclair, M.A., Vice-Principal, Normal School, Ottawa.

It is the aim of Education to direct and facilitate the evolution of the individual from the real or actual to the ideal self, from the lowest form of self-activity, that of feeling, to the highest forms of reason and the will.

Arrested development is the result of interference with the process calculated to promote the most rapid growth in rational insight and the power of volitional control. The subject is worthy of a more careful and extended investigation than has thus far been given it. Permit me to offer a few general suggestions.

While there are in every individual certain natural tendencies which should be suppressed, it is nevertheless always true that self-activity is the keynote of real progress.

There are budding or nascent periods for certain activities. A duck kept from the water for a sufficient time has no impulse to swim when brought to the water. The child who has not learned to play in early life does not care to play or plays unnaturally in later years. The teacher should study the child and endeavor to seize the instinct at the height of its development.

The method of presentation should be adapted to the increasing apperceiving power of the learner, and the teacher should possess a knowledge of mind-activity and growth, and more especially of the power of the lower activity to pave the way for the higher, and of the higher to reinforce and enrich the lower. The so-called "Faculty Psychology" ignored this relationship. Modern Psychology looks upon perception, memory, etc., not as isolated and independent faculties, but as successive forms or stages of development of mind growth, the higher being implicit in the lower; *e.g.*, Induction and Deduction are simply specialized forms of Analysis and Synthesis.

Arrested development may be produced by going too rapidly or too slowly. It is unwise to attempt to force growth by a hot-house treatment which makes the boy an artificial man in childhood and leaves him a boy during the remainder of his life.

There are many who have reason to regret a foolish haste which faced them with difficulties before they were prepared to grapple with them, and which resulted in superficiality, discouragement and disgust for learning. The fact that "concepts without intuitions are empty" is most important, especially in Primary Education.

On the other hand it is equally unwise to remain too long upon the matter and method of the lower plane. There is special danger of this in schools where thoroughness and power to pass text-book examinations are exalted to the chief places. Elementary work can be best understood by taking a higher and broader outlook. The study of advanced Mathematics clears up many difficulties met with in the initial stages. One can scarcely know the grammar of one's own language unless one has studied some other language. After a study of such a treatise as Green's Prologomena ordinary literature is easy reading.

Again, the lower activity, if continued for too long a period, becomes fixed in rigid habit, and the associations thus formed render it difficult to rise to the higher activity. A pupil may continue counting on his fingers and working simple sums with slate and pencil until he finds it exceedingly difficult to solve problems mentally. Sense perception may be unduly emphasized and little attention paid to the formation of accurate images and correct definitions.

This form of retardation receives a vigorous criticism at the hands of Dr. Harris, Commissioner of Schools for the United States, in a recent book, entitled "Psychologic Foundations of Education."

The distinguised author holds that the central fact to be kept in view in the study of mind is self-activity. Without a belief in self-activity, motion, change, activity cannot be explained. Without such faith the observer is unfitted to investigate these phenomena, and is particularly weak in his equipment as a psychological investigator or a director of mind.

Self-activity is vaguely discernable in plant life which appropriates and by a mysterious alchemy assimilates nourishment from its environment. In animals we find a higher type of self-activity, for the animal is capable of locomotion, which brings him in contact with different surroundings, and also with the accompaniment of design or purpose. Purpose implies an end based upon what is and what is not, which again implies pleasure and pain.

Feeling, then, is an activity of the self and its environment.

Feeling in the rudimentary animal soul is a complex process automatic and almost unconscious. Feeling, however, is the basis of intellect and will in germ.

The contrast between present and possible sensations is the birth of purpose and design and of all the ideals that arise in the human soul, moral, æsthetic and religious. We perceive this self-activity by introspection.

The lowest stage of thought considers all objects as independent one of another, and deals with things as unrelated. The next stage deals with the relation of things. It explains phenomena by the category of force or of essential relation. The third or highest stage rises to an understanding of self-relations and of an independent Being capable of originating energy. It contemplates God, Freedom and Immortality.

One can scarcely read Dr. Harris' argument without longing to see a fuller emphasis in the school-room of what may be termed the creative ideal.

The gravest charge which can be laid at the door of any educational system is that its *aims* are *trivial.* If the object of education be either utility or adornment, the end will be unsatisfactory. It is only through the conception of the possibility of development toward the Divine that we can hope to evolve the highest type.

INSPECTORS' DEPARTMENT.

PROMOTION EXAMINATIONS—THEIR IMPORTANCE.

J. H. KNIGHT, P.S.I., EAST VICTORIA.

In this discussion I shall take for granted three things. First, that good classification is desirable, that is, that pupils to be taught a certain subject should be, as nearly as practicable, equally proficient in that subject. Second, that a pupil proficient in reading may be otherwise in arithmetic, while another who is good in arithmetic may be bad in reading. Third, that it is not desirable to have a pupil taught arithmetic in one class and reading in another, but that each pupil should be in the same class for every subject, provided that for convenience a certain class may be divided into two or more divisions, or two or more classes united for the teaching of certain subjects.

It is sometimes stated that the teachers are the proper persons to make promotions because they are with the pupils more frequently, and know just what they can do, that they know their strong and weak points better than any written examination can show.

That the teachers should be the best judges I admit. That they do not always show it I am certain, because I have examined the papers of scores, if not hundreds, of Entrance candidates who were not fit to be in the Fourth Class.

Want of experience is one reason why many teachers cannot be relied upon to make promotions. Many young teachers (and unfortunately most of our rural teachers are of this class) seem to think that when pupils have read through a book and learned a smattering of a few other things, they are fit for the next book. They have not learned to be thorough. They do not see the importance of each subject as a means of training, or of knowledge in the sense that knowledge is power. In many cases they have learned the subjects because they could not get a certificate without knowing them, and they do not see of what use this knowledge can be to the pupils.

Another difficulty arises from the anxiety of parents to see their children promoted. In many cases pressure is brought to bear on teachers to advance the pupils whether fit or not, such parents not considering that the pupils would be better in a lower class in which they can learn, than in a higher class in which the subjects are beyond their capacity. Where it is understood that only those pupils who pass a promotion examination can be advanced, it is useless for parents to interfere.

Occasionally dishonesty induces teachers to make promotions, especially about the time they expect a re-engagement. Such teachers presume that trustees are blind to their schemes, and take it for granted that if pupils are promoted they are necessarily fit. In some cases this plan succeeds; sometimes it fails.

Without a promotion examination there are some subjects which are pretty sure to be neglected or not well-taught. Two of these are Geography and History. The reason I would require a strict examination in these subjects is that the future choice of reading will be much influenced by them. If pupils are merely taught to read at school, they will read trashy books when they are able to do so. If while they are learning to read their minds are stored with facts—facts about places which actually exist; facts about people who have actually lived—they will prefer to read about places that are, and people who have been, instead of reading about places that do not exist and people who have never lived. To accomplish this object the two subjects should dovetail both in the teaching and examining, and every effort should be made to interest the pupils in the facts.

Another reason why our examinations should not promote the pupils too early is with respect to Literature. As our text-books in reading are arranged, the literature is generally too difficult for the pupils. So far as the Second Reader is concerned there is no trouble, but if the pupils in the Third Book were a year older, and those in the Fourth Book two years older than the present average it would be better. As it is, the teachers have to explain and question, question and explain, until they are tired, just because the matter is in advance of their age. A promotion examination that keeps pupils a few months longer in each class is a benefit.

Again, pupils frequently remove from one section to another, requiring that they go to a new school. A pupil who was in the Third Class has often to be placed in the Second Class in the new school. This is discouraging to the pupil, and unpleasant to the

teacher. Such a thing could hardly happen in a county or inspectorate where a promotion examination was properly conducted. And in case of removal from one county to another, with such examinations in each county, the trouble would be less than where each teacher promotes according to his own standard, or, as is often the case, without any standard at all.

Lastly, with respect to Composition, why should a departmental examination be looked forward to with dread? If pupils were trained to give written answers, and the teachers gave the necessary time to reading and marking the answers, the pen would eventually become as ready a servant as the tongue. A written description would be no greater task than an oral description. The writing of familiar and business correspondence, travels and adventures, newspaper reports and editorials, would be a pleasure to the writer and a satisfaction to the reader.

EDUCATION DEPARTMENT
LIBRARY.
JAN 31 1901
ONTARIO.

NOTES FROM LECTURE ON UNIFORM AND PROMOTION EXAMINATIONS—HOW BEST CONDUCTED.

DR. D. McDIARMID, I.P.S., GLENGARRY.

Instead of attempting to answer the question theoretically, it will be more satisfactory to give an outline of the manner in which Uniform and Promotion Examinations have been successfully conducted, continuously for fifteen years, under the supervision of the three interested Inspectors. in the Public Schools of the United Counties of Stormont, Dundas and Glengary.

1. At the beginning of the year printed lists of instructions, containing a selection of Lessons from the Third Reader, are sent to the teachers.

2. Before the date at which the examination is held, a copy of printed instructions and two blank schedules are sent to each teacher.

3. These schedules when filled in, show the names of the pupils in Classes II. III. and IV. with the marks obtained in each subject of the prescribed course of study, with the exception of Reading.

4. The package of examination papers is made up of sealed parcels, one for use in the forenoon and afternoon of the days of examination.

5. Teachers change schools during the examination.

6. In each of the named counties a committee of fifteen examiners is chosen from the teachers.

7. The examination is held towards the end of November. The examiners are expected to complete their work in time to return to the teachers the pupils "marked" answer papers, and send to the Inspector their reports of the results of the examination before the Christmas vacation.

8. Handsome lithographed certificates are given to the successful pupils.

9. The County Council makes a yearly grant for each county of $145—$120 to be divided among the fifteen examiners and $25 expended for printing examination papers, regulations, etc.

10. The examination on the same papers is held simultaneously in the named counties.

The features are a proficiency examination of pupils, of classes and of schools more than merely restricting promotions. The uniform reading of papers makes the results on the whole fair—one examiner may be severe, but another will be liberal.

The examination is popular with teachers and pupils—with the former because (1) Many of the details have been proposed and adopted by themselves. (2) They do not prevent teachers from promoting pupils, who they believe, can keep up with the work of the classes in which they are placed. (3) They protect teachers from the ill-will of disappointed parents of pupils not ready for promotion. (4) Teachers whose pupils made a good record, have no trouble in retaining their situations or obtaining more desirable ones. (5) The pupils are trained to pass creditably the examinations for admission to the High School.

Copies of the following were submitted: (*a*) Certificates. (*b*) Regulations and Time-table. (*c*) Schedules. (*d*) Post-card notifying teachers of the schools at which they were to preside. (*e*) Circular of instructions containing Third Class Literature Selections. (*f*) Set of last examination papers. (*g*) Set of prepared wrappers for package and contents of examination papers.

ALPHABETIC REFORM.—THE ENGLISH ALPHABET AS IT OUGHT TO BE TAUGHT.

J. COYLE BROWN, PETERBORO'.

ke ge ku
a, b^{e}, c^{e}, d^{e}, e, ^{e}f, g^{e}, h^{e}, i, j^{a}, k^{a}, ^{e}l, ^{e}m, ^{e}n, o, p^{e}, q^{u}, ^{a}r, ^{e}s, t^{e}, u, v^{e}, w^{oo},
se je *x, y^{i}, z^{e}.

fe kwe theme hwe ek af ech.
oo, au aw, ou ow, oi oy, ch^{e}, ph^{e}, qu^{e}, sh^{e}, th^{e}, wh^{e}, ^{e}ck, ^{a}gh, ^{e}ng, ^{e}tch.
these

At a joint meeting of the Public School Inspectors' Training and Kindergarten Departments, Mr. J. Coyle Brown moved, and Mr. J. H. Knight seconded:

"That the present Board of Directors of the Ontario Educational Association be a committee, and associated with the Honorable the Minister of Education, to consider the propriety of changing the names of c, g, h, w, y, z, oo, au and aw, ou and ow, oi and oy, ch, ph, qu, sh, th, wh, ck, gh, ng and tch, so as in each case to make the name correspond with the function, or main function, as the case may be."

The motion was carried by a large majority.

Mr. Brown, in speaking to his motion, among other things stated that our alphabet may be considered as consisting of twenty-six single symbols, and seventeen compound symbols, in all forty-three. Of these no less than twenty-three are wrongly named, that is, the name of each of the twenty-three is such as to give no assistance in pronouncing words, until by a long, tedious and otherwise perfectly useless association, the name calls up the function.

The letter c is, after s, the most frequently used letter in the alphabet as an initial. It has two main functions, that of k and that of s. Taking the English language as embracing about one hundred thousand words (a very low estimate), more than nine thousand begin with this letter when it has the k function, and only about nine hundred when it has the s function. In median positions the proportion is in all probability about the same. As a final letter it has always the k function. At least twelve thousand words are made unnecessarily difficult to the learner by the wrong

name given to this one letter. It should be called ke, except when followed by e, i, or y, when it is really se. Care, core, cure, claim, crime, and enough to follow to make more than nine thousand, all beginning to the ear like ke.

G begins more than three thousand words, and of these about twenty-five hundred begin like ge (as in geese). Gate, gear, globe, grind, grog. The name je does not contain its proper function, but one that it has in common with j. It is often like j before e, i, and y. This rule is not absolute as in the case of c.

H begins about four thousand words and not one of these begins like the name aitch. We should get a name for this letter as we get one for b, by adding e to it. This will give the name he. Every word in the language beginning with this letter when it is not silent begins like he. Haste, heal, hire, hope, hut.

W is initial in the case of about 2,500 words. It is unnecessary to state that not one of these begins like doub, le or u. When used as a vowel it is the equivalent of oo more than of any other sound. This suggests that oo should be added to it to form its name. We thus get woo. Ware, weave, wild, worn, all beginning like woo; and dew, few, hew, spew, all ending like woo.

Y, like w, is used both as a consonant and vowel. When used as a vowel it is generally the equivalent of i. Hence i should be added to it to form its name, yi. About 250 words begin with this letter, all like yi, not one like wi.

If it was proposed to call b, bed, or d, ded, every one would see the absurdity of the proposal. There is little more reason for calling the last letter of our alphabet zed. The last letter in the name is a useless appendage and should be left out. The letter should be called ze. Zeal, zero, zone, zig-zag.

OO, which some call o, o, and others double o, should be named oo as in ooze. Tool, stool, room, broom, groom. It has other functions, but this is its main one and should determine its name.

AU should have a name as in aught. Paul, Saul, Maud, cause, clause. AW should have a name as in awl. Caw, haw, maw, fawn, drawl. Here we have two vowel symbols with the same function. They cannot be distinguished by name as consonants can. This is of little consequence, as the pronunciation of a word follows from one as well as from the other.

OU as in out. Rout, prout, sprout, house, mouse, souse, grouse, bound, hound, wound, ground. There are perhaps 500 words in which this combination occurs. The great majority are regular. In a considerable part of the others ou is like oo.

OW should have the same name as ou, as in owl. Down, brown, crown, frown. In many cases w lengthens o, as in grown.

OI and OY have the same function and should have the same name. Oil, boil, coil, toil, spoil; boy, coy, hoy, Boyle, Hoyle.

CH should be named che, as at the beginning of cheese. Chain, cheap, chine, chore, church, choose, chouse. With the combination initial 66 per cent. are regular. In 28 per cent. ch is like c, as in chasm, chaos, and Greek words generally. In 6 per cent. ch is like sh, as in chaise, chaperon, and French words generally. Che contains the main function of ch and hence should be its name.

Ph has the same function as f and should be called fe. Phone phiox, phrase, Philip, philosophic.

Qu, as in queen, should be called kwe. Quail, quote, quire, quaver, quoit, squeak.

Sh should be called she. Shale, shear, shine, shop, shun, shawl, shoot, shred, shrill, shrive.

Th has two functions proper to itself alone. These are heard at the beginning of theme and these, from which the names may be deduced. Thank, thimble, thistle, thread, thrill, thrust; this, that those, thine, thou, thus.

Wh has its function perfectly shown at the beginning of wheel, from which we get its name whe (hwe). Wheat, whale, while, which, whether, whither, whorl.

Ck should be called ek. Back, reck, kick, stock, struck, quack, quick.

Gh as a terminal should be called af. Laugh, cough, rough, chough, enough.

Ng should be called eng. Bang, length, string, strong, flung.

Tch, as in fetch, should be called etch. Hatch, stretch, switch, crotch, scutch.

Ch and tch have the same function. The former is called che, and the latter etch. F, gh, and ph have the same function and are called ef, af, and fe respectively. C, k, q and ck have the same function and are named ke, ka, ku and ek respectively. These nine symbols are thus distinguished by name. They cannot be distinguished by pure phonics.

Wherever the foregoing proposed names are different from those suggested by others, the teacher will, I think, find them an improvement. They are adapted to whatever method of teaching may be employed; the Alphabetic, the Look and Say, or the Phonic. They naturally grow out of the Phonic, and Phonics will

never be as effective as it ought to be until these names are adopted. How unphilosophic it is to introduce a letter as k- and afterwards call it se; and another as h- and afterwards call it aitch; another as w- and afterwards name it double u; a compound symbol as oo and afterwards call it o, o, or double o; another as f- and afterwards pe, aitch; and so on with twenty-three symbols out of the forty-three which constitute our English alphabet. It is no wonder that progress in the art of reading is slow, uncertain and unsatisfactory; that children averaging ten and a half years of age are still in the Second Reader; that only about 40 per cent. of all the pupils attending the Public schools of Ontario are beyond the Second Reader; and that the great majority of the pupils leaving our Public schools are unable to read in the proper sense of the term. When is a person able to read? When he or she can take up a book or newspaper never seen before and so render an ordinary paragraph as to understand it, and enable those who are listening to understand. When this point has been reached the person may be said to be able to read, but at no point below.

What result will follow the introduction of the proposed names? 1. The time required to master the art of reading will be materially reduced. Children will be able to read as well at nine years of age as under present conditions at twelve. 2. Spelling will be wonderfully simplified. It will largely cease to be the painful drudgery it is at present to both teacher and pupil. 3. Many things now taught can then be learned. In this way the labour of the teacher will be lessened, and the pupil vastly benefited. Two boys pass the same examination at the same age, and come out equal. The one has been taught, the other has learned. The one has been stuffed, the other has mastered the subjects himself. Are these two boys on the same plane? No. Other things being equal, the latter will run away from the former. 4. To foreigners and natives whose mother-tongue is other than English it will prove a great boon. It will enable them to acquire a knowledge of the language much more readily. To Ontario this is a matter of no small moment. There is a considerable non-English speaking population in the east, north and west. The sooner these master English the better for THEM, the better for US. Looking beyond our own province we see people from many lands and speaking many tongues flocking into Canada. We want to make these people one with ourselves. In order to do this we must teach them our language. With this in view, we ought to render

its threshold, the alphabet, as effective as it can be made without altering the written or printed page.

Our Gracious Sovereign rules on every meridian, and on every parallel of latitude. Her subjects speak almost every human tongue. What a grand work it will be to assist in consolidating these into one vast whole! In giving to these one channel of thought and intercommunication! I know of no pedagogic movement so likely to be efficacious in this direction, as the one embodied in the motion which I have the honor to propose.

When Elizabeth was queen, when Shakespeare and others were writing for all time, there were only about five millions who spoke the English language as their mother-tongue. Now there are one hundred and fifteen millions who thus speak it. It has embalmed in it the best thought of the English-speaking people, and much of the best thought of all peoples. It is largely the language of commerce and is rapidly becoming the language of diplomacy as well. In 1898 three-fourths of all the letters passing through the world's post-offices were in this language. If any existing language is to become the language of the world, that language is the English. The politicians have been trying their hand at influencing the action of the Motherland. Much is heard of Preferential Trade and Imperial Penny Postage. Let the friends of education in this Province of Ontario try their hand in the direction I have indicated. The effects will reach much further and accomplish incomparably more for the Empire, and for human kind, than Preferential Trade or Imperial Penny Postage.

SHOULD A DIPLOMA, A GRANT, BOTH, OR NEITHER BE GIVEN FOR EXCELLENCE OF SCHOOL PREMISES AND SUPPLIES?

T. A. Craig, I.P.S., Kemptville.

By way of introducing this subject permit me to briefly outline the condition of the average rural school on the occasion of one of our semi-annual inspections.

1. Fences, gates and yard indicate a lack of care and attention.
2. Closets and woodshed neglected.
3. Walks not kept in proper condition.
4. Roof, doors, windows, etc., not good, require repairing and painting.
5. Desks, including teacher's desk and chairs, loose or broken and, perhaps, not suited to the age of pupils.
6. Blackboard, erasers and supply of crayons inferior.
7. Maps, charts and tablets old and faded as well as torn.
8. Globe, dictionary, gazetteer, clock, numeral frame, etc., if at all supplied, generally of a cheap and inferior quality.

I do not say that all these defects will be found in the same school at the same time, but I do say that it would be difficult to find a school at any time without some of them. A school may pass inspection, or comply with the law, and yet the buildings, surroundings and supply of apparatus may be lacking in excellence. School property is subject to the ravages of time, to wear and to the destructive proclivities of certain children. The replacing, repairing and improving of this property is entirely in the hands of trustees, and fortunately, or unfortunately, these officials almost invariably seem to believe that it is their particular, important and first business to guard against an excessive and extravagant expenditure of the section's money. This is a natural concomitant of our school system. Many ratepayers hold that they have no right to assist in educating their neighbor's children, or that, at least, a very limited amount of assistance should be required. This idea put into practice means cheap teachers, cheap maps, cheap globes, cheap everything in connection with the school.

I need not present arguments to convince you that educational progress is necessary to national prosperity and national greatness. It is assumed, then, that the first duty of those who direct our educational affairs is to secure educational progress and to secure it with as little friction and public dissatisfaction as possible. Experience, observation and expediency are evidently necessary to action in dealing with such matters.

We inspectors invariably report to the Trustee Boards concerned the condition of their school and other matters requiring attention, but we have no opportunity for perhaps five or six months to learn if the defects have been remedied, and when we return we too often find that nothing has been done and that the report has simply been ignored. I am aware that we can withhold our orders for the payment of the Legislative grant, but withholding this grant for every trivial cause is not advisable, besides the law governing the payment of the grant will not admit of our doing this in order to secure excellence of school premises and supplies. Compliance with the Regulations, regarding these matters, may be good, better and best. I think this is as it should be, yet there is no reason why trustees should not take a step in advance of the regulation requirements and provide many necessaries in addition to those enumerated in the Schools Act. It is very difficult to persuade trustees that the school-house, its surroundings, comfort, convenience, etc., are powerful agents in the education of children, and that a proper supply of the best apparatus procurable for the teacher to work with is economy.

The continuous change in the personnel of Trustee Boards, the lack of an ambition to rise above ordinary conditions, a misconception of what true education is, the failure to appreciate the advantages to be derived from an all-round training and the consequent negligence and indifference on the part of parents are some of the difficulties with which we have to contend.

If education is beneficial and advances man in the scale of civilization, and gives us higher and nobler conceptions of life and living, evidently the educative means must be superior to the surroundings, *i.e.*, the teacher must be superior to the taught in culture, refinement, intellectual attainments, etc,; and the surroundings, so far as they are the result of human effort, must be models of art.

It must be apparent to every inspector that our schools have reached a sort of dead level, and that it is only here and there that we can succeed in rising above this level. I know that the schools

are as good as the people want. I also know that the want is somewhat dormant. The schools must be better than the people want if they are to benefit the rising generation to that extent which is desirable.

So much, then, for introduction; now as to the proposed remedy, viz., a diploma, a grant, both or neither.

DIPLOMA.

A diploma will be valuable under certain conditions: (*a*) when awarded for excellence and not for the performance of duty; (*b*) when trustees and teacher take a pride in their school; (*c*) when the object is not so much to secure the diploma as to put the school in such a condition that it will merit special recognition.

Our educational machinery works with little attention from the ratepayers and apparently to the satisfaction of the majority. There is begotten in the people an idea that everything is all right and that the schools are good enough. If we could overcome this apathy, and arouse greater educational enthusiasm, a diploma would be a valuable and effective agent in our work. Under existing circumstances, however, I am of the opinion that it will be of little use and for the following reasons:

1. The lack of a desire to obtain it.
2. There is no competition for it.
3. It does not represent individual personal effort.
4. The present tendency to appreciate things according to their money value.
5. The extra outlay required to secure it will be opposed by a majority of the ratepayers in almost every school section.
6. Trustees are not capable of estimating the value or appreciating the advantages of superior teaching appliances.

GRANT.

These are days of money-making. The average Canadian values everything, even to his religion, in dollars and cents. "Nothing for nothing, and very little for a bawbee," is his creed. The business of most men seems to be not only to get wealthy, but how to get wealthy quickest. Professional men want higher fees or larger salaries, laborers strike for an increase in wages, employers want larger profits, companies and corporations are striving to extend their influence and power to earn. These, I believe, are the present conditions in Canada, and everything in the business

of life seems to tend to educate the public mind in this direction. Is it any wonder, then, that the utilitarian idea predominates in our educational system, and that culture, philanthropy and altruism must take a secondary place?

Our schools are public institutions maintained at public expense, and anything that Trustee Boards may do to secure a larger share of the money set apart to maintain these institutions, will be sustained by the people. If trustees failed to secure the total amount obtainable, I fear they would receive some severe criticism at the annual school meetings.

Trustees are compelled in the first instance to accept office, and then subject to a penalty if they fail to act. They receive no remuneration for their services, so that negligence, carelessness and indifference too often prevail. There are also always local influences at work which seriously embarrass them in the performance of their official duties. What with pressure from the inspector on one side and the opposition of ratepayers on the other, they often find themselves "between the upper and nether millstones." I need not point out to you that inspectors spend a great deal of valuable time each year trying to get trustees to fulfil the duties of their office, and that teachers are often hampered in their work for want of teaching appliances. I believe if these difficulties could be overcome, the efficiency of our Public schools, particularly in the rural districts, would be very greatly increased.

What I would propose, then, as a probable means of securing improvement, would be an adjustment of the basis on which the present Government grant is apportioned, and a maximum grant of say $50 from the municipal treasury, to be paid on conditions similar to those on which the Government grant is now paid to High schools.

The present Government grant is finally apportioned to the Public schools on the basis of average attendance, and at the same time about seventy-five per cent. of the pupils are compelled to attend school. It is thus seen that the original intention of using the legislative and municipal grants as a means of encouraging the attendance of the children at the schools, has been superseded by the compulsory clause in the Schools Act. No fixed principle of educational policy would therefore suffer by changing the basis of apportionment of this grant.

If a further adjustment of the burden of supporting the Public schools in the rural municipalities were secured through the

township council raising $50 for each school, in addition to the $150 already provided, and if this $50 were paid to the trustees on some such conditions as I shall outline, I believe our country schools would in a very few years show great improvement in that particular feature of their condition with which I am dealing.

The basis on which this money should be paid to the schools would be somewhat as follows:

1. Ten dollars of the Government grant paid to each school employing a first or second class teacher, for preceding year.

2. Balance of Government grant to be paid on average attendance.

3. Twenty per cent. of all salaries over $200. Maximum amount paid any school, $20.

4. Ten dollars for exterior of school-house, yard, fences, gates, closets, walks, woodshed and water supply.

5. Ten dollars for interior of school-house, condition of floor, walls, ceilings, ventilation, heating.

6. Ten dollars for miscellaneous supplies: as apparatus for teaching with, library, cabinet of weights and measures, collection of plants and minerals, decoration of walls and cleanliness.

This apportionment should be made by the inspector annually, and in the presence of the trustees or their representative.

BOTH OR NEITHER.

There is little doubt that both a diploma and a grant could be effectively used, but I think the diploma would be unnecessary if we had a substantial grant.

If we are satisfied with our present rate of progress in Public School matters, and willing to continue to allow men who have little appreciation of art, and less of the teacher's requirements, to finally determine the character of our school buildings, the condition in which the school grounds, etc., are to be kept, and the quality of the apparatus for teaching furnished, we require neither a diploma nor a grant. If, on the other hand, we propose to improve the architectural appearance and sanitary condition of our school-houses, to adorn and beautify our school premises, and secure for our teachers a good supply of improved appliances for working with, I believe we can succeed best and most satisfactorily by offering inducements in money grants on some such conditions as I have already suggested.

KNOWLEDGE, AND HOW TO MAKE CHILDREN LOVE IT.

M. J. KELLY, M.D., LL.B., BRANTFORD.

In our day, education, or rather knowledge, everywhere prevails. It knocks for admittance as loudly at the cottage as at the palace gate. The peer and the peasant alike enjoy its advantages and share in its rewards. If not more profound it takes a wider range than it ever did before. In the Courts of Mammon its aid is eagerly and persistently invoked, and, therefore, the scientific side of it is especially cultivated and encouraged. Nearly all civilized nations vie with each other in extending its boundaries and increasing its money-making power. In its propagation millions are spent annually, as against thousands fifty years ago. It has become a State matter almost exclusively, its support and control being, in the main, under the direction and supervision of the State. Complaint is sometimes made that we have too much of it—that the masses are being overeducated—that aspirations are thus created which can seldom be realized, and that this tends to unrest, sometimes to crime. This is an old complaint which applies only to inadequate or imperfect education, and justifies Pope's well-known line: "A little learning is a dangerous thing." It is further alleged that the professions are overcrowded and that the most promising of our boys, from the home on the farm and the cottage of the mechanic, are drawn thither, and, without money or patronage, often doomed to starve or steal. This charge is old, too. The talk of the overcrowding of the professions is referred to by Thackeray in one of his books, and was ridiculed by him more than sixty years ago. For the diligent, honorable and high-minded student there is always room above, and to enable such a one to reach the goal is just what is needed in an educational system. The great original geniuses of this world have sprung mainly from the people; Homer, Virgil, Cervantes, Shakespeare, Milton, Burke, Burns, Moore, Faraday, Carlyle can assert no claim to high birth or affluent parentage; yet these are among the foremost names on the files of time. But how many others, now lying in neglected graves over which rises "nor storied urn," nor "animated bust," if the needful help had come at the critical time, might have joined the ranks of the immortals—others whose hands, under more favorable auspices,

> "The rod of empire might have swayed,
> Or waked to ecstasy the living lyre."

Our great dramatist puts the matter well:

> "There is a tide in the affairs of men,
> Which, taken at the flood, leads on to fortune."

Happily in this "Canada of ours" the avenues of knowledge are open to all. From the kindergarten to the university the way is clear, the ascent comparatively easy. In the distance are fame and fortune. For each eager aspirant "the shining throne is waiting" if he has only the industry, the energy, the "Roman will" to climb and "take it."

But in ascending the Alps of knowledge, guides are still needed, and experienced ones, too, to prevent the unwary from slipping into pitfalls—fingerposts at the crossroads, to save time and expedite the journey,—modest, silent guides who are not constantly prating about their achievements—who know the safe passes and are content to lead their charges therein—who can discern the appositeness of the poet's couplet and act upon it:

> "Men should be taught as though you taught them not,
> And things unknown proposed as things forgot."

Now, to create in our boys and girls the desire for knowledge, to direct their steps to the "Temple of Truth," I conceive to be the highest aim of all instruction. In order to do this effectually and well in our primary schools, there are three things to be considered —(1) Our methods. (2) Our machinery. (3) Other means.

1. Part of all education lies in the mastering of methods, in getting the use of tools; and the fundamental methods, the primordial tools, are the venerable three R's—(*a*) Reading, the knowledge of signs; (*b*) Writing, the making of signs; and (*c*) Arithmetic, the foundation of measurements. The subjects on which these tools are to help us are just two, man and nature. The study of the first is literature; of the second, science. He who understands the distinction and can properly apply the tools is in the way of becoming a safe guide.

2. Our machinery is not so easily disposed of. Many thoughtful and accomplished men have expressed doubts as to whether the trend of educational movements in this later Victorian Era has been always in the direction of the best results. The beacons that guided themselves safely into port have nearly all disappeared, and they dread the perils that menace those who may follow them. They entertain gloomy views of the future and anticipate disaster, more the outcome, it may be of brooding discontent than of sane reflection. These are pessimists, and pessimism is as old, at least, as Nestor. They note many changes, many innovations never

dreamed of before in their philosophy, and inquire of themselves, with a tremor, "Whither are we drifting?"

To their assistance have recently come a couple of prominent bank managers, who have criticised adversely our school system of which they evidently know little, and declare that the lads who enter their service from the schools, have no adequate knowledge of even the three R's, and can neither read well, write well, nor reckon well. But this is not so bad as the army of anonymous scribblers who vent their venom against it in the public prints. It will probably survive, notwithstanding. The fact is, our Ontario school system is about as well contrived and as symmetrical as any human device can be. All it needs is time to settle and a fair trial. It furnishes to the youth of the Province an education nearly free; it provides trained instructors for all schools, and further for their due supervision. It cannot perform miracles—it cannot ensure perfection, mental or moral, where nature has been niggardly in supplying the materials —it cannot make ladies and gentlemen, but it can and no doubt does, afford help. But before there were systems there were schools, and the master was both the system and the school. Knowledge of these we often get from other than purely scholastic sources. Shakespeare's description of the "Schoolboy with satchel on back and shining morning face creeping unwillingly to school," presents a perfect picture. Equally true to nature is the gentle Goldsmith:

> "Full well the boding tremblers learned to trace
> The day's disasters in his morning face;
> Full well they laughed with counterfeited glee
> At all his jokes, for many a joke had he."

A genuine Celtic scene—a glimpse of the border-land between laughter and tears, a vision of roguish eyes and love of fun. But how quickly he changes:

> "Yet was he kind, or, if severe in aught,
> The love he bore to learning was at fault."

Now, it seems to me, after many years' experience and some reading, that inspiring the young minds with this love of learning, is not only the primary, but the ultimate end of all instruction. Methods of teaching have their place and function; school books may be helps or hindrances, as they are wisely or unwisely employed; psychology, which should teach the normal evolution of the faculties of children, merits the attention of intelligent, indeed, of all teachers; but unless a love for the subjects taught is bred in the hearts of the young, the work is in vain. How many bright youngsters in school and college have become disgusted with the

whole pedagogic process, have treated the curriculum with contempt and wandered off into "suburban lanes forlorn"—and of these not a few have achieved immortality. You cannot easily get a square peg into a round hole. More difficult still is it to run youthful minds through the same mould or machine with success. No two, probably, acquire knowledge in precisely the same way or by the same devices. The skilful and prescient teacher, when he finds a pupil, unaided, on the right road, withholds assistance and advice, preferring to encourage independent thought and action. His attention is given to the laggard, the dull, the defective members of his class. Such a one is sure to reap his reward, if not in "filthy lucre," at least in an approving conscience and the gratitude of his pupils. The question then, is, how can we beget in our young people this desirable love of knowledge?

1. First and chiefly, I answer, by loving it ourselves. No teacher who does not love learning himself can hope to make his pupils love it. If the matter of salary is the be-all and end-all of his labors, then his work will be comparatively fruitless. But if he is fond of learning there is no limit to his usefulness, no end to his beneficent influence.

2. In the second place, by the establishment and keeping up of good school libraries This is one of the first things to which I directed my attention in 1871. But I need not dilate on this topic —everyone knows that good libraries make their possessors "the heirs of all the ages." Their value, will, of course, depend largely on the use that is made of them and the character of the teachers in charge.

3. The Kindergarten is of great value in the early stages of school work, but we cannot hope to see it generally introduced.

Knowledge, we know, precedes wisdom, just as the sap precedes the sugar, which is its essence. This fact has been noticed by the dead Laureate, who early made a profound study of life and its environment:

> "Knowledge comes, but wisdom lingers, and he bears a laden breast
> Full of sad experience, moving towards the stillness of his rest."

This short and imperfect paper cannot be better concluded than by a stanza from the same poet:

> "Make Knowledge circle with the winds;
> But let her herald, Reverence, fly
> Before her to whatever sky
> Bear seed of men and growth of minds."

THE ACADEMIC QUALIFICATION OF THE PUBLIC SCHOOL TEACHER.

JOHN DEARNESS, I.P.S., LONDON.

In dealing with the subject assigned to me I propose to support the following propositions:

1. That the sessions of the training schools, unless considerably lengthened, should be wholly devoted to pedagogics.

2. That it is *desirable* that a teacher's academic attainments should embrace a wider field than that prescribed for the most advanced classes which he is required by law to teach.

3. That it is *indispensable* that his academic qualifications should thoroughly cover the subjects prescribed by the Public School curriculum.

The first proposition may be of debatable application to the Normal schools with their session of five months. The most recent statistics show that only thirty-six hundred out of a total of ninety-one hundred teachers in actual service are graduates of the Normals, whereas nearly all are graduates of the county Model schools. Limited to the latter I need not take any time arguing for acceptance of this proposition. Here past experience supports theory, for formerly Reading, Physical Culture, Music and Physiology were taught as academic subjects in the county Model schools and occupied a place in the final examination. Three of these do not now *appear* on the list of final tests, and the fourth one is properly narrowed nearly to the limits that might be embraced by school management. Whether the academic preparation of a teacher should be divorced from the strictly professional is a question I do not propose to raise. While cogent arguments may be advanced against the divorce, I take the ground that three months is all too short for the purely professional part of the teacher's preparation.

In this connection something should be said about Psychology. This subject—under the heading, Science of Education—occupies a good deal of time at the training schools. I have made numerous attempts to appraise its value. Many a time and oft have I said to a teacher, "Examine this method or that act of discipline in the light of the laws of mental science." The answer or confession has

almost invariably shown that the teacher cannot or does not carry his psychology into concrete situations. Some, who have observed this fact, have said that the subject has not been properly taught; others have said that the fault lies with the subject itself, or rather with the vagueness of our knowledge of it. My own opinion is that the time has been altogether inadequate for the student to get that grasp of it necessary for him to turn it to practical account. Before the term is over he has not even organized its phraseology. Even to one apt in acquiring the language, the introspection and reflective study necessary to make it a real and valuable acquisition would take more time than one short term. If this view be correct, then Psychology, too, viewed as pure science, should be removed from the Model School curriculum and placed among the academic subjects to be studied by those who choose the teaching profession as their aim. Of course, the applications of Psychology, with whose elements the students would then be familiarized, would be the legitimate work of the training schools.

Those who have been saying that the time taken up with Psychology as a science in the training schools has been practically wasted, will feel themselves fortified by the recent utterances of Professor William James, to the effect that it is a great mistake to think that Psychology is something from which one can deduce definite schemes and methods of instruction for immediate schoolroom use, and that ingenuity and tact in dealing with pupils' minds, although the alpha and omega of the teacher's art, are things to which psychology cannot help us in the least.

Believing that mental science can be made a valuable and interesting subject of study, not only for teachers but for all who aspire to a liberal education, I invite discussion on its proper place in the course of a teacher's education.

It is unnecessary here to offer an argument in favor of the proposition that the entrant to the Model School should be the possessor of a good general education. The standard of learning and culture expected of persons who enter any other profession is not too high for the teacher. I would not cut off one subject from his preparatory course solely because he will not be called upon to teach it; indeed, that might in certain instances be a reason why such subject should be included, just as manual training is needed most for the education of those who are not likely ever to use it as a means of a livelihood.

When we come to examine the third proposition in its applica-

tion to our generally excellent Public School system, we find that we are illustrating Jacotot's maxim, that one can teach what he does not know, a paradox which R. H. Quick aptly compared to the sophism that a salty ham quenches thirst.

If I trusted to my own observation I should be convinced not only that one cannot teach what he does not know, but also that he cannot teach a lesson well if his knowledge of the subject does not extend beyond the limits of the lesson. Let us glance over the subjects of the Public School curriculum, comparing them in passing with the attention which they receive in the so-called non-professional training of the teachers.

Reading comes first. "Good reading," says Thring, truly, "is the first training of the beginner, and the last crowning excellence and consummate perfection of the finished master." Is there anyone in this audience who, speaking from considerable experience, will say that he believes that the average Model School student can read well, let alone do the more difficult and different but dependent thing of teaching others to read well? Time and again have I said, "That pupil has read her sentence well; make use of her example to lead the class to see the reason for her success." Almost without exception the attempt consisted merely of repetition and imitation, completely proving that the teacher had no knowledge of the principles of vocal expression. We have the authority of the High School inspectors for the statement that poor reading prevails at the Entrance examinations, and yet the position of this vitally important subject in the examination schedule is at the very foot.

In Spelling, Writing, Literature, Algebra and Euclid the academic course is sufficient to fairly qualify graduates to enter the Model schools.

I would vote to see the study of English Grammar prolonged, but I refrain from urging it because I think the work done in foreign grammars, and to some extent in the Classics and English Literature, supplements the rather early close of the course in English Grammar.

History is an unpopular and unsatisfactory subject in the Public schools. There are two or three obvious reasons, one of them being that the teachers are not full enough of the subject: they have not a comprehensive knowledge of the history of the British Empire, and they know nothing at all of general modern history. What study could be more educative and humanizing; what one contribute more effectively to the making of the ideal voter of which

we heard last night? Surely the academic requirements in this important subject are not creditable to the banner province. The history of Greece and Rome, so suitable to the University matriculant most certainly does not offer the best field for the intending teacher whose knowledge of the history of his own country is limited to the present primary standard.

Next comes Arithmetic. Arithmetic, that within easy recollection once held royal sway, behold is now so fallen as to move its enemies to pity. Once regarded as the logic of the Public School, first as a disciplinary study, first as a utilitarian study; overrated then no doubt, but now as greatly underrated. I can imagine some one's saying, "Aren't the examination papers in Arithmetic pretty nearly as difficult as they were fifteen or twenty years ago?" Perhaps they are, but then the candidates had to make 50 per cent. on them, and they continued to give some study to the subject with their increasing judgment up to the end of their academic course and they were not permitted to eke out meagre ability to relate propositions arithmetically by what might be called the tricks of equations in Algebra. I saw the holder of a Junior Leaving certificate teaching the last Public School Leaving Arithmetic paper quite wrong in the principle of the partnership question, and finding the area of the trapezoid by squaring the average of the four sides. A farmer bought a piece of land for $3,800, upon which an annual annuity of $100 had 8 years and 7 months to run. Two teachers of the certificate named above failed to satisfy either the farmer or themselves as to the cash value of the claim of the person in whom the title was vested. I could weary you citing examples to prove that Arithmetic is dropped too early in the academic course of intending teachers.

In Geography the case is worse still. Reading has a nominal place in Form II, but Geography is summarily disposed of with the lowest Form. Inspector Carson heard a teacher who has a Senior Leaving certificate teach a Second Class that the ocean gets its saltness from the washings of the rivers. I heard the fixed stars defined as those that, were it not for the sunlight, we might always be able to see in the same place. "Lead the class to tell why Essex is better adapted than this country for raising peaches." "I cannot," frankly answered the teacher. "I didn't study any geography after passing Form I., except a little about Greece and Rome."

Possibly to some I may seem to be citing exceptional examples.

They are not so, however, but I refrain from multiplying them for two reasons. One is that I would not wantonly wound the feelings of a teacher who might read the description of his lesson used in illustration here; the other reason is that it is unnecessary. I am speaking to Model School principals and inspectors, who must have seen as many proofs as I that the subjects named should not be dropped at so early an age by intending teachers, but that these subjects should be carried on through their academic training into the years when their strengthening judgment would organize, generalize and apply the lessons in such a manner that they could teach them independent of ready-to-hand helps.

Book-keeping and Drawing, like Geography, are dropped at the end of the first year and not infrequently we hear teachers frankly admitting that they do not know enough of these subjects to teach them well. There are other subjects, such as Music and Physiology on the Public School course that have no place in the curriculum for the academic examination of teachers.

Agriculture is again on the horizon, and there are whispers of Nature Study. They may have a name to live on programmes, but educationally they will be dead, unless two important steps be taken, viz., natural science be studied more extensively and practically in the High schools, and the methods of teaching science through the self-activity of the learner be illustrated and practised at the training schools.

Botany is taught now in the High schools, but as learned there it is of limited use in directing nature-study exercises in the Public schools. Dissecting dead plants brought into the school-room by the teachers, or scrutinizing tissues killed in formaldehyde, fried in celloidin, and sliced into almost invisible sections, does not give the young teacher the sympathetic attitude, or the classes of facts, or facility in making the kind of observations most useful to the conductor of the lessons in nature or agriculture for Public School children.

Natural science to be useful to the Public School teacher must be studied from the dynamic as well as from the static side. The ecology of plants and animals is far more suitable for Public School work than their anatomy. The opening flower or leaf bud, the squirrel cracking a nut or the bird feeding her nestlings, will enlist the child's interest and educative self-activity when the withered petals or dissected animal would repel it.

A stranger sitting here might ask, What are your intending

teachers doing in the period between the Public School graduation and the entrance to the training school? The answer is, that besides the modicum of Reading, Geography, Arithmetic and Natural Science already referred to, they are pursuing a good course in English Literature, Composition, and Chemistry and making a start in Latin, French and German with variations or options.

Well, why not take the two or three years they are starting Latin, French and German to make them thorough in the essential subjects? The question is at least worth thinking over. Personally I have the highest esteem for the language studies, particularly for Classics. I once thought Latin and Greek synonymous with scholarship. Out of my own meagre earnings I paid for private instruction in Latin, Greek and French, and assiduously devoted all the time I could spare to them for four or five years. In a department of Natural Science which I have pursued as a recreation for some years the standard reference works are in Latin, a fact which enhances my appreciation of a knowledge of that language. Notwithstanding, I am bound to say that, contrary to a former opinion, I am convinced by all I have observed or heard, that an average Ontario student of fourteen years of age who expects that his language studies will be limited to three or four years, had certainly better confine himself to studies in English, and in that language he will find ample scope for the severest application of his powers. Memorizing vocabularies takes much time and returns little educational gain. The highest authorities are all but unanimous in declaring that a mere smattering of foreign languages leads not to sound education but to pedantry. Dr. Arnold lamented that boys, even in the higher forms, could read the sublimest passages in the classic poets without an emotion. Fouillee, whose valuation of the classics is rated extravagantly high by some of his French contemporaries, declares that "Latin loses all its virtues—its gradual development of the intellect and taste—if it is reduced to a linguistic indigestion of two or three years, a mass of words and phrases stored in the memory."

Give a thought to the army of students in the schools. What are they there for? Some are preparing for college, some for life—life in the Public School, life in the counting-room, life in the workshop, life on the farm. How are they doing that? Practically by all pursuing the same course—a course carefully adapted to promotion to college. Chancellor Burwash told us this morning

that the course was chosen by the Senate of the University as suited to its matriculation requirements, but that only one out of six of the High School students proceeds to a University career. Now, it is needless to argue what almost everybody admits, that a course of training and an examination standard specially suited to promotion to a three or four years' period of college life is not equally well suited to a final graduation.

What more important work can the High schools undertake than the right training of their three or four thousand students who will engage in Public School teaching—a work upon which they put forward their strongest claim to public support—a work upon which the future welfare of this province rests more largely than upon anything else they can do?

Surely it is not asking too much that, whatever else they slight, this important work be not neglected. While agreeing heartily with the resolution so unanimously adopted this forenoon, that Arithmetic and Grammar be promoted to a higher status, I ask more, and I am sure you will ask more, namely that the academic qualifications of Public School teachers be raised to the highest practicable degree of excellence and adaptation to their work. To ensure an expression and presentation of your views I conclude by offering this resolution:

"That in the opinion of the Kindergarten, Public School Teachers', Training and Inspectors' Departments, now in joint session convened, the present standard of the academic qualifications of Public School teathers is inadequate and to some extent unsuited to their work; therefore no time should be lost in specializing the so-called non-professional course of study of intending Public School teachers so far as such specialization is compatible with a sound education, and in revising the tests of such study so as to exclude persons from being licensed to teach subjects which they have not learned; and that a committee consisting of the presiding officers of these sections be appointed to have this opinion respectfully pressed upon the attention of the Honorable the Minister of Education."

HOW TO INCREASE THE ATTENDANCE AT THE ANNUAL MEETINGS OF THIS SECTION OF THE ONTARIO EDUCATIONAL ASSOCIATION.

WILLIAM JOHNSTON, M.A., ATHENS.

The attendance at the Annual Meetings of this Department of the Ontario Educational Association should be increased: (1) By making the papers and discussions interesting and profitable. (2) By requiring every Public School inspector to be a man of ripe scholarship, unstained character, wide sympathies, and professional earnestness. (3) By making the time of such meetings suitable for attendance. (4) By making the place of meeting such that all parts of the Province would ultimately receive equal advantages in regard to cost of attendance. (5) By the cultivation of brotherly love, and the exclusion of the envious feeling. (6) By the determination of every inspector to make the Ontario Educational Association a powerful intellectual force in the school system of Ontario.

The papers read before this Section of the Ontario Educational Association should embrace all subjects connected with education. They should be characterized by breadth of view and depth of thought. Party politics and religious narrow-mindedness should have no place here. They should breathe a spirit of tolerance and respect for the prejudices and opinions of others. They should be easily understood, and yet exhaustive: the truth of their statements so evident that every educationist, though ignorant in other matters, should not err therein; and so comprehensive that a thorough exposition of the subject is given by the writer. The discussions should be temperate and relevant. They should not betray a spirit of faultfinding, or a desire to excel in repartee. A man may become so sharp that he is in continual danger of cutting himself. This specimen of fallen humanity is not a desirable acquisition anywhere; he should be especially obnoxious amidst a body of men whose daily endeavor is to cultivate a spirit of kindness among his fellowmen. I do not mean to insinuate that such a spirit as I have described is to be found in this body of gentlemen; I merely direct attention to it in order that it may never be allowed to enter here.

The scholarship of the school inspector should be of the very highest order. He should make it his constant aim to keep abreast of the times. To do this extensive reading is necessary, as well as attendance at educational meetings. If his reading is varied he will necessarily desire an exchange of ideas, and he will find his way to this market that he may enrich himself by an exchange of goods at the fountain of knowledge. Do you deem this extravagant language? I mean it seriously. The inspector who does not read will stagnate; and the worst of all is that the inspector who is afflicted with mental degeneration will, in many cases, tains his teachers with a spirit of listlessness and indifferentism which it extremely harmful to education in general and to those who possess it in particular. Every inspector does possess the groundwork of scholarship. He cannot possibly get an inspector's certificate without scholastic attainments of no mean order. But he should read much more than the course prescribed for an honor degree in Arts. What are we to say of an inspector who cannot talk to his teachers of the works of Homer, Herodotus, Thucydides, Socrates, Plato and Aristotle; of Cicero, Cæsar, Sallust, Virgil and Plutarch; of Des Cartes, Pascal, Goethe and Guizot; of Sir William Hamilton, Dugald Stewart, Reid, Berkley and Locke; of Hallam, May, Stubbs and Maine; of Froude, Rawlinson and Arnold; of Prescott, Washington Irving, Moitley and Bancroft? If he cannot, he loses many opportunities of directing a young man or woman in the way that leadeth into the temple of knowledge. It is here that the well-read inspector exercises his greatest influence for good. He is casting bread upon the waters which may bear fruit many days hence.

The character of the inspector influences attendance at meetings of this kind. If he is free from vice and honest in all his dealings, he cannot fail to increase the membership of any society with which he may be identified. If his life is inconsistent with his profession, his presence must have an injurious effect upon whatever cause he engages to assist. This may seem a far-fetched argument, but I believe it contains an important truth—one that is capable of increasing or decreasing materially the attendance at educational meetings, as well as the good results that may be produced by such gatherings.

The poet tells us that

> "A heart that can feel for a neighbor's woe,
> And share in his joys with a friendly glow,
> With sympathies large enough to enfold
> All men as brothers, is better than gold";

and the principles of pedagogy state that an unsympathetic teacher is always a failure. Hence the inspector must cultivate the sympathetic side of his nature; and if he does this earnestly he will attend all educational meetings, as far as possible, and bring as many friends of education with him as he can persuade to take part in this useful and honorable labor.

Professional earnestness should not require notice, but it is to be feared it does. There seems to me a tendency among school inspectors to view his inspectorate as a land flowing with milk and honey. It is to him the Promised Land. He may not have wandered forty years in the desert before he entered into his rest, but some of us wandered nearly twenty years in Public and High schools before we reached the long-looked-for haven. If we do not look closely after ourselves it may be that the talents committed to our trust will not be returned with usury when the day of reckoning demands from us an account of our stewardship. It is a fatal mistake to look upon an inspectorship as a sinecure. The duties of the inspector are different from those of the teacher, but they are not less onerous. If he does his duty he is in continual conflict with parsimonious trustees and careless teachers. He finds it very difficult to secure the engagement of the best teachers available. The teacher will frequently not teach as well as he can because poor teaching pleases the people. An efficient teacher cannot be engaged because an inferior teacher has friends or relatives who will give him the school. If the teacher does not put his pupils through the book much faster than they can master the work he must give way to one who will. Such are a few of the staple difficulties encountered by every inspector; difficulties which should be grappled with manfully and honestly, not overlooked as unavoidable evils inherent in every popular system of education. It is here that inspectors should say to each other, "'Come, let us reason together'; let us persuade trustees to 'be true to God, themselves and truth, then it followeth as the night the day that they cannot be false to any man.'"

Much remains to be done before this happy state is reached. Gatherings of this kind should strengthen the hands of all friends of education, for there is strength in union; but notwithstanding all our efforts the melancholy truth is ever before us that many trustees will engage the teacher who will accept the lowest salary, irrespective of qualification, and that the inspector, in many cases, is powerless to remedy the evil. I speak only for myself when I

assert that teachers' qualifications are higher to-day than they have been at any time in the past, and that the salaries paid are lower at the present time than they were a generation ago. This year I have six efficient second-class teachers who receive only $200, a fully qualified first-class teacher at $350, and a graduate in arts who has taught many years in Public and High schools at $400. Surely united action in this matter is necessary! Every inspector should attend all meetings of the Ontario Educational Association that he may assist in devising means whereby such defects in our educational system as have been pointed out may be remedied.

Little need be said regarding the time of the annual meetings of this Association. Inspectors should make it convenient to attend at any time. It is, however, questionable if such meetings should be held during holidays. If attendance were looked upon as a legal duty, and the Tuesday, Wednesday and Thursday immediately preceding Good Friday were the days of meeting, perhaps the attendance would be increased. In my opinion this change would be beneficial, but there may be difficulties in the way which I have overlooked. It is a serious objection to meeting during the Easter holidays, that those who attend are virtually deprived of their vacation between the beginning of the year and the summer holidays.

The place of meeting demands attention. No city in the Province is superior to Toronto as a place of meeting; but it is doubtful if it is best to have *every* meeting in Toronto. If the meetings were held in Ottawa, Toronto and London alternately, perhaps the attendance would be increased. This, at least, is certain, that once in three years the eastern and western parts of the Province would have a meeting of the provincial association within reach of them. The teachers of Toronto have long enjoyed the privilege of these meetings at their doors; would it not now be an act of justice to give other parts of the Province similar educational advantages in this respect? This seems to me a question worthy of discussion, and I leave it with you for present or future consideration.

What shall I say of the fraternal feeling among teachers and inspectors? Is it in need of cultivation? Do we always "carry in our right hand gentle peace to silence envious tongues"? If we do not, a cause of absence from our meetings is discovered; and the evident course for us to pursue is to give more attention to the cultivation of altruism and less to our own immediate good. Again it is necessary to reason together. Why should we not freely com-

municate to each other our thoughts and feelings, especially those connected with the great work in which we are engaged? To do this there can be no better way than to meet as we are doing here to-day; to talk with each other upon matters pertaining to the public good; to discuss in a spirit of fairness and Christian charity the best means of rendering our efficient Public School system still more efficient; and above all to so bear each other's burdens that the labor of each may be lightened by the assistance of all.

Is the Ontario Educational Association a powerful educational force? It should be; if it is not, its weakness is caused by the apathy and indifference of those engaged in education. It may be assumed that this Association is, and has been, productive of much good; but it cannot be denied that the good done to education by it is far from being what it would have been if *all* the teachers and inspectors had put forth the effort that has been exerted by those who have taken an active part in doing the work of the Association. This is not as it should be. Each inspector should assume personal responsibility in regard to the work and welfare of the Association. He should make its success his peculiar care. He should attend all meetings of the Association. He should endeavor to make those meetings of great good to education. He should bring the Association before his teachers and trustees. He should try to induce them to attend its meetings by convincing them that this Association is no shoddy shop, but that it is an extensive departmental store in which only genuine goods are disposed of to those in quest of educational products. The fact is the public is not well acquainted with the work done by the Association. The newspaper reports are always meagre and frequently misleading. The volume giving the "Proceedings" of the Association is not widely circulated, and it is less extensively read. Public School inspectors can do much to make the public acquainted with the proceedings of the Association. Each inspector should place a copy in the hands of every teacher in his district. He can encourage teachers to read the proceedings, and this alone would increase the attendance. What is wanted is increase of interest, and this undoubtedly would be followed by increase of attendance.

If inspectors could only fully realize the great responsibility that rests upon them they would not fail to take part in the work of the Association. It is frequently said that the High School is the poor man's college, but in reality the poor man's only college is the Public School. Every Public School inspector knows

how true this statement is. Not ten per cent. of the Public School population ever attend a High School, and of that number very few indeed are children of poor men. The whole truth is that ninety-two, at least, out of every one hundred of our population receive all their education in the Public School. Hence the great importance of making Public School education as thorough and extensive as possible; and my contention is that the efficiency of the Public School depends, to a great extent, upon the ability, earnestness and thoroughness of the Public School inspector.

But while we insist upon the supreme importance of the Public School, we should not overlook the great and good work done by the High School. The High School cannot exist without the Public School, and the Public School is dependent for its teachers upon the High School. Hence, Public and High schools act reciprocally upon each other, so that the welfare of the one is inseparably bound up in that of the other. Clearly, then, it is the duty of the Public School inspector to do all he can to increase the efficiency of the High School; and it is also evident that every High School teacher has a direct interest in the welfare of the Public School. Perhaps no better means for the accomplishment of these ends can be devised than a yearly gathering of inspectors and teachers at the annual meetings of the Ontario Educational Association. In my opinion the chief reason why inspectors do not attend the annual meetings of the Ontario Educational Association is *lack of interest.* Every inspector does not obey the Divine injunction: "Whatsoever thy hand findeth to do, do it with thy might" (Eccl. ix. 10). The first and last duty of the inspector is to be in earnest. His *summum bonum* should not be popularity. Plutarch tells us that Cæsar was popular because he squandered millions of money among the populace. Freeman tells us Cæsar was the greatest man that ever lived. The statements of Plutarch and Freeman taken together lead us to the conclusion that great intellectual powers may be allied with the basest instincts and passions of human nature. The inspector should ever guard himself against sacrificing his manhood upon the altar erected by those who applaud only when they are satisfied with the offering. His aim should be rather to discharge his whole duty as the guardian of the Public schools placed under his charge; and to accomplish this object he should employ only "means that are sanctified by honor," laboring earnestly and honestly to advance education, having no ulterior object in view, save the ultimate good of the community in which he is called to labor.

The importance of this subject may, perhaps, excuse the length of my paper. I have striven to bring forcibly before my fellow-inspectors the great advantage of united effort, and, if I have succeeded, the time spent in writing these thoughts, to me at least, is not lost time. There may be difference of opinion as to the best means to increase attendance at our meetings, but there can be only one in regard to the desirability of attendance. My means of increasing attendance are the best that occur to me; your means may be widely different: but if you and I act in accordance with our convictions, no one in future will have any just cause of complaint regarding non-attendance at the meetings of the Ontario Educational Association.

TRUSTEES' DEPARTMENT.

MANUAL TRAINING IN HIGH SCHOOLS.

J. E. FAREWELL, Q.C., WHITBY.

"It is advisable that the study of languages other than English should be discontinued in one-third or one-fourth of our High schools, and that manual training and instruction in the use of tools and implements, and in subjects having a practical relation to agriculture, mechanics, manufacturing and mining should be substituted therefor."

In discussing this proposition it is advisable to consider what is the object of a system of public instruction, and why the State takes this matter under its control.

All right-thinking people agree that it is necessary for the safety and prosperity of a nation and the development of its resources that the State should see that its people are reasonably well educated. It has been by common consent agreed that some provision should be made for the special training at the public expense of those intended for professional life. It has not yet been settled by competent authority that special training should be assured only to those who are to engage in professional pursuits. If there are other pursuits upon which human comfort and happiness largely depend, and special training can be advantageously given to qualify those engaged in these pursuits, common justice requires that such instruction should be given. This becomes plain when one remembers that the number engaged in teaching and other professions is but small compared with the great army who are engaged in agricultural, mechanical, manufacturing, mining, and commercial pursuits, and that the amount of taxes paid by professional men as compared with the producers is proportionately small. One might well suppose that the struggle would have been how to raise the means for paying instructors in the Classics, French and German, and that there would have been found in every county at least, schools for teaching all that could be taught to aid the great producing classes in their struggle for existence.

What is the record in this respect in this great province? One good agricultural college, one school of practical science, one school of mines, and one school of technology maintained by the city of Toronto.

Commercial students are now receiving some attention in High schools, but only after private enterprise had recognized the wants of the great commercial class by establishing commercial colleges in the cities and large towns.

The establishment of these commercial colleges should long ago have shown our legislators and educational authorities that more attention should have been paid to the training of boys for the business of life, even if the attention of the authorities aforesaid had to be withdrawn for a few moments from the "Classics and Modern Languages."

It is not a question whether Classics or Science affords the best educational training; as Sir Lyon Playfair puts it, the question is, "Whether the schools will mould the minds of boys according to their mental varieties."

Can such subjects be taught under such surroundings as will keep the pupils in line with their intended occupations, and not "side-track" them into the professions?

While High schools and collegiate institutes have of late years been made much more useful to the great body of pupils because they have been made more practical by teaching more of what pupils needed to learn, it is still a matter of well-founded complaint that the tendency of these schools is to divert pupils intended for other pursuits than professional life into that life; that when once the boy whose parents desire him to follow farming, or a trade, gets into the High School there is but small chance of getting him back to the farm or work-shop.

I am quite well aware that it may be said the study of languages is not compulsory. Most of us remember well enough when a slavish imitation of the old country Grammar schools made such studies compulsory.

"What's the good of a boy who does not study Latin, anyway?" is the often expressed feeling of the High School boy who does study Latin. Is Sir Lyon Playfair right in his theory that "Schools should aid boys in discovering the class of knowledge best suited to their mental capacities, so that knowledge may be specialized to cultivate the powers of men to the fullest extent"?

If the carrying on of agriculture, mining and manufactures in

the best possible manner is of any importance to this country, it is about time some provision was made for schools in which boys "can discover the class of knowledge best suited to their mental capacities."

Our 1st Vice-President, Mr. Chown, in his able paper on "Manual Training," read before us in 1897, which will well repay your careful perusal, quotes from Froebel as follows: "The human mind is creative as well as acquisitive. A scheme of education which concerns itself with the acquisitive powers merely—and this has been the usual scheme of the schools hitherto—is fatally one-sided and partial. Man is developed and cultivated towards the fulfilment of his destiny and mission, and is to be valued even in boyhood, not only by what he receives and absorbs from without, but more by what he puts out and unfolds from himself. Experience and history teach that men truly and effectually promote human welfare much more by what they put forth from themselves than by what they have acquired."

The nascent period for developing the forms of manual skill is from about four to fourteen. The brain centres which preside over the movements of the hand, develop rapidly during this period, and attain a greater degree of efficiency than it is possible for them to reach at any later period of life.

It would seem, if the reasoning of this great teacher is correct, that the arts upon which human life and happiness depend so much can be greatly benefited and the best interests of the country promoted, by manual training in schools.

How does the theory stand the test of experience? The kindergartens of Germany and other countries have trained the young children. The Russian manual training system of Dela Vos spreading over continental Europe has trained the older boys for doing fine and intricate mechanical work. Sir Lyon Playfair asks: "Why is it that we see whole branches of manufactures where they depend on scientific knowledge passing away from Britain, where they originated, in order to engraft themselves abroad, and leaving only their decaying roots at home?" His answer is that "the English system of education is too narrow for the increasing struggle of life." *The English Railway and Engineer Review* says: "Is it not strange that only a few years ago the electrical students in the United States had to send to England for text-books? Now we have the strange spectacle of English engineers sending to America for machinery built according to the ideas of their former students?"

How much does the British Empire and the world owe to her mechanics and manufacturers for all that ministers to the health, comfort and enjoyment of the race, and yet how little is being done for the boys who are "to take up the burden" is too well shown by Mr. Hubert MacWorth, Government Mine Inspector. He said not many years ago, "Is it not a little remarkable, that nowhere in England, as far as I know, is the mechanic instructed in those simple rules by which he may avoid failures, shorten labor, raise his own value and improve his art."

We are supposed to have vast quantities of undiscovered and undeveloped mineral wealth stowed away in the northern and western parts of this province. What are we doing towards instructing any number of the young men of the country how to discover minerals and identify them, how to mine for them, how to protect the miners while carrying on the dangerous operations, how best to get the minerals to the surface of the earth, and how to refine and make them saleable? Much valuable instruction in such could be taught in the High schools by science and mathematical masters who had given these subjects special study.

That there is need for such instruction is shown by the fact that, not many years ago, one in every eight miners was killed, the causes being explosions, flooding of mines, defective machinery used in working the mines or unskilled management of the same.

The defects of the present system have been pointed out by many United States authorities on educational matters. Charles Francis Adams, Jun., speaking of the Massachusetts Public schools, which cost $4,000,000 a year, says the imitative or memorizing faculties only; are cultivated and little or no attention is paid to the thinking or reflective powers indeed, it may be almost said that a child of any originality or individual characteristics is out of place in the Public School. Wendell Phillips says of that system, "it stops too short, and in justice to boys and girls in society it should see to it that those whose life is to be one of manual labor should be better trained for it."

The Russians have established, and for many years successfully tested, a system of manual training, which is the pioneer of this educational reform. It is but the amplification of the kindergarten system. It does not propose to teach the practical exercise of particular arts, but to train the eye and hand to the execution of designs, and the use of tools, so that the pupil may take up readily whatever art he may afterwards choose to follow. It has been

copied in the United States in several schools in large cities, notably Boston, Chicago and St. Louis. Have we given enough attention to the fact that skill, precision and excellency of workmanship and judicious selection of materials have all so much to do with the success of manufacturers and their ability to hold their own at home and make their way into foreign countries? Have we taken any means to secure these qualifications for success? In this restless age, in this hustling, bustling western world, apprenticeships to trades are almost things of the past.

Surely a system so well recommended should be tested somewhere in this province. Where can it be tested with greater prospect of success than in the High School where the pupils have all attained sufficient education to appreciate scientific and practical instruction?

The school as proposed would give to the pupils all the advantages which High schools now give, with the exception of instruction in Classics, French and German. The English and commercial masters would be retained. The mathematical master would probably need a special course in a school of practical science to qualify him to give such practical instruction in Statics and Dynamics, the uses of the mechanical powers, the amount of power or speed obtained by their use when combined with machines, and in general the subject and machinery treated of in the branch formerly called Natural Philosophy. He should give practical instruction in measuring and estimating the capacity of buildings, the quantities of earth to be removed from any place and the quantities required to be placed in any position for a particular purpose, the measurements of solids and superficies, the elements of surveying and levelling, the strength of metals and woods, the means of calculating the power of steam-engines. The science master would give instructions in Chemistry and Botany, and in connection with this department would explain the blights, the insects which attack the grains and roots grown by the farmer and the means of preventing injury from these as far as known, the value of different kinds of manures and the relations of chemistry to agriculture, he would also give instructions in Mineralogy and Geology, particularly as to exploring for and testing minerals, the causes of accidents in mines and the safe-guards which should be adopted to prevent them by proper ventilation, use of safety lamps, etc., the general principles as to faults in mines, the liabilities of mines to be damaged by water. He should give instructions in Chemistry in

all its applications to the arts to which his pupils are likely to be engaged.

But questions may be raised as to the expense of instruction in manual training and of purchasing tools and machinery for equipping the school. Fortunately there need be no dismal apprehensions as to this part of the question. I am told by M. Harper, Esq., Whitby, who is an up-to-date manufacturer of iron and wood-working machinery, and who has had practical experience in working both wood and iron as a carpenter, pattern-maker and machinist, that a shop furnished with a steam-engine, shafting, wood and iron lathes, forges, carpenters' and machinists' tools, so as to give instruction as above indicated, could be equipped for the sum quite within the means of a School Board of any town, and for a sum which would be amply repaid by the increased value of boys' services when they left school.

As to the cost of practical instruction, there is probably in every county in Ontario one town having a High School and having manufactories in which wood and iron work is carried on. In these could be found men capable of giving practical instruction in carpentering, wood-turning, forging and other iron work and in the management of a stationary steam-engine. The services of such men for two hours a day could be procured for a sum very much less than it costs to hire two masters for Classics and Modern Languages, so much less, in fact, that there would be a balance for expenses of running the engine and providing materials, drawings and models for use of the shop.

In a school so equipped a fair test of a boy's ability to succeed in the mechanical arts could be easily made. Instructions could be given in practical work to such an extent that a boy leaving the school, after a course there, could at once earn his living. The associations and influences of such a school would be all in line with the boy's future course in life; he would have acquired a respect for manual labor, which to him would be dignified and ennobled by the fact that it was connected with and dependent upon scientific principles, he would be animated with hopes and aspirations as to distinguishing himself in his calling; he would realize the force of Longfellow's "Invocation to Labor"—

> "In the world's broad field of battle,
> In the bivouac of life
> Be not like dumb, driven cattle,
> Be a hero in the strife."

Such a school might be made of great practical value to the State in different ways; for example, there are thousands of steam engines and many of them with boilers of great size, used in closely populated towns or connected with manufactories employing large numbers of workmen. We are all too familiar with boiler explosions.

What security has the public that the men in charge of these engines know anything of the construction of the engine or the causes of these unexpected things which happen just about the time of an explosion? Instructions in the principles of the engine and as to how accidents may result from mismanagement would be of great value to the engineers. If there were schools where such instruction could be given, a system of licensing qualified engineers could be adopted to the greater safety of the public, both as to their lives and their property.

Once established the pupils would come, not from the homes of farmers and mechanics alone, but by a natural selection of occupation from the commercial and professional classes also. Men who would otherwise be third-rate professional men, unsuccessful, disheartened and a nuisance to the public, would become active, skilful and successful producers of wealth. There is surely no such want of professional men or teachers as to render it necessary that all of the High schools of the country should be worked to their fullest capacity to turn out candidates for the University.

The attempt could safely be made to convert one-third or one-fourth of the classical schools into practical science schools on the lines above indicated.

GREATER CARE OF THE TEETH OF SCHOOL CHILDREN.

S. W. Brown, L.D.S., Dunnville.

It would not be to my purpose to read a lengthy or scientific paper at this time, even if I were able to do so, but I should like to say a few words to you as to the care of children's teeth, and the instruction given along these lines in our Public schools. The instruction in our Public schools in matters pertaining to the teeth is extremely faulty, and the instructor as a rule extremely ignorant in this particular branch of education. No attempt has been made in the text-book on Physiology and Temperance now in use in the Public schools to do more than familiarize the pupils with the fact that they have teeth.

In the past few years the dental profession has made remarkable progress and advancement, particularly in successful methods of treating and preserving the natural teeth, but has the public estimate of the profession kept pace with this progress? Most certainly not. Dentistry of to-day with the laity is too much what it was twenty or thirty years ago. It is surprising to note the number of intelligent people who have almost no knowledge pertaining to the teeth, and a deplorable ignorance as to their care. Especially is this the case with children's teeth. Think how much could be avoided if parents appreciated the value of temporary teeth and understood the important part they play in the regular healthy development of the child. It is a recognized principle in the rearing of an animal that the hygiene and food of the first months of life qualify its future development in a manner which no future management can correct. In the human economy this period is a more extended one, and continues through the whole stage or period of retention of the deciduous teeth. This being the case the necessity for careful attention to the preservation of these teeth becomes of extreme importance.

In these things and in many others along the same lines, the public needs education, but how to attain this end is the question. The opportunity is presented in our Public schools through the medium of the text-book on Physiology and Hygiene. Why not a little hygiene of the mouth and care of the teeth? True, the aver-

age teacher, having all he can attend to, so at least he thinks, does not make any effort to inform himself concerning the teeth, as he is not required to pass an examination as to what he knows about them, and certainly no physical examination is made of his own teeth, else many teachers would fall by the wayside in their efforts to obtain certificates, and might consider themselves lucky not to be reported to the Board of Health. Many members of the teaching profession, otherwise clean and neat, are so thoroughly negligent of their own teeth as to cause comment among the young pupils who are daily entrusted to their care, and it is safe to say that it does not add to their popularity with those young students who are accustomed to take note of anything appearing in their field of vision and to make use of it accordingly; but there is a deeper significance in this than mere popularity with the pupils. The teacher who trains his pupils to "do as I tell you, not as I do," will certainly find it more difficult than the one who sets the example by his own person. To illustrate, I may mention the common case of a man who is accustomed to drink only at his meals, but who is in course of time thrown into the society of others, who take their drink at odd times, when he gradually and almost imperceptibly to himself, drops into the same habit, and when that is extended to a number of individuals it becomes a force of custom, which is exceedingly difficult to change; and so it is with every other habit. There is not one of us who is not influenced by the nature of his surroundings, and especially is this the case with children.

The training which school children receive has a vast influence upon them in all their future lives. The good impressions formed and a little knowledge wisely distributed would go a long way toward ultimate perfection. While perfect cleanliness of the teeth exercises a marked influence on their prophylactic condition, there are other hygienic considerations of greater importance. It has been clearly shown that dental caries would not be possible with functional equilibrium. As the departure from norm alalkalinity of the oral secretions, which renders decay possible, is probably connected with deranged alimentary functions, any course which would restore these functions to a proper activity would be a correction of dental caries.

It has been observed in several of the asylums for children coming largely from the unfortunate classes of society, that the health of the inmates soon becomes much improved under the combined

influence of proper regimen and correct hygienic care. The teeth of the inmates also undergo changes in the same ratio. Caries becomes less frequent, and in many instances it has been noticed that complete arrest of dental decay has taken place.

The text-book used in our Public schools at the present time contains but twenty-seven lines of matter supposed to make the complete study of the "care of the teeth." Here is an extract: "Human teeth loosen and drop out in advanced age. The wisdom teeth, so-called because they do not appear until maturity, the 'age of wisdom,' are usually the first to disappear. The structure of the tooth is so hard and compact, that long after death, when the bones of the body have all crumbled to dust, the teeth remain whole." You will all agree with me that in that quotation very little is given as to the care of the teeth, yet it is a part of the twenty-seven lines in the text-book on that subject. When the whole knowledge of an individual is summed up in so few lines, it is not strange that the "third set" appears as often as it does in early life. That a crying need of improvement exists here, I believe no one will question. I would suggest that a chapter on the care of the teeth be added to the text-book on Physiology. This should be prepared and written by a competent dentist, not by a physician as heretofore; for the average physician, although he means well, does not know much more about the preservation of the teeth than the average school-teacher.

UNIFORMITY IN THE PUBLIC SCHOOL PROMOTION EXAMINATION PAPERS THROUGHOUT THE PROVINCE.

JOHN A. LEITCH, CHAIRMAN BRANTFORD PUBLIC SCHOOL BOARD.

To discuss this subject, Mr. President, in the broader and more comprehensive sense, as stated in the printed programme, was my original intention. Upon more mature consideration, however, and from experience gained since we last met, I have decided to limit my remarks to a scheme which I think could be adopted with very great advantage. Before entering upon the discussion of any special scheme I may be allowed to point out a few of the advantages to be gained and difficulties removed by having a uniform basis of promotion, at least in the cities and towns of our Province. In the first place there is a frequent change of location. The children thus changing could be assigned their proper class, would lose nothing in their standing, and could use the same outfit as before. Lack of uniformity would subject children whose parents were frequently under the necessity of changing, to serious drawbacks, and be an impediment to their advancement and final success.

Secondly, I think it would be an economy of both time and energy, if not of money, in the preparation and printing of examination papers. In this utilitarian age whatever conduces to economy, either in mind or matter, is something worth considering, so long as the same development of mind is attained which secures strength, mental and physical.

Again, as a natural consequence of uniformity where the papers set as a test are used in all the schools there is not the same danger of narrowness in the teaching. The pupils in a certain class may learn but very little of what they are taught. To learn something is generally understood to mean a necessary consequence of being taught something. This may be true in an elementary sense in many of the formal and initiative courses in our schools. That teaching is best, however, which aims at developing independence of thought; that trains to unravel a mystery at sight, and enables a boy or girl to find out for themselves, for in so doing is the only true source of pleasure and study. Pupils may learn all they are told and then know very little of the subject.

A tendency to independence in thought and action would, no doubt, be an outcome of uniform and general tests; not a test of memory but of the power to think and find out for one's self with but an occasional judicious hint from the teacher.

Uniformity in promotion examinations is but a natural consequence of proper organization. A proper organic condition can only exist where there is a systematic head with a proper interdependence of all the parts to form a complete and systematic whole. Each school being a separate and independent law unto itself results in weakness, and fails, I think, to secure the desired effect of a great national system.

Notwithstanding those considerations as to the merits of a system of uniform promotion examinations throughout the Province but realizing that there are some difficulties in the way of this project, I am firmly convinced that a more simple and effective method can be adopted, and one which, if you will patiently bear with me Mr. President and gentlemen, I will endeavor to outline as briefly as possible.

First, I beg to submit that instead of a yearly final test examination, which determines the promotion or not of a pupil to a higher form, a system of weekly examinations be adopted and conducted as follows:

(*a*) Each subject to be taken in turn.

(*b*) No subject to be taken the second time until the others on the programme have been taken.

(*c*) The papers to be returned marked to the pupils in order that they may see their errors.

(*d*) The questions to be prepared chiefly by the teachers of the grade concerned, and by the Principal and Inspector.

(*e*) The basis of the weekly examination to be the work of the term up to the time of examination, the whole of the examination to cover the whole limit.

(*f*) If any pupil is found by the teacher, through absence or deficient knowledge or application, to be unable to keep up with the work of the class, such pupil shall be reported to the parent, and if after two weeks' further trial he has not greatly improved the teacher shall report to the Principal who will send the pupil to the class from which he was last promoted, and all such pupils must in the regular way again be promoted to the class above.

(*g*) The parents of each child to be furnished with a weekly statement of the pupil's standing, conduct, attendance, etc., on a

card provided for the purpose; an abstract of this to be kept on a sheet and the total number of marks obtained during the school year to determine whether the pupil shall be promoted or not.

(*h*) This final summing up to consist of averaging the results of the weekly examinations in all the subjects of the course as well as the general standing as determined by the oral work of the term which should be an element in the hands of the skilful teacher in determining the fitness of a pupil for promotion.

My reasons for suggesting the latter scheme and recommending it in preference to the former are:

First—That weekly instead of yearly examinations give several opportunities for remedying any mistakes or improving in any subject.

Second—That each subject can be more thoroughly tested by several examinations than by one.

Third—That this plan gives a chance to the nervous boy who becomes used to the test; it gives a chance to the boy who is prevented through unavoidable circumstances from being present at a final examination.

Fourth—A consciousness of uniformity would create a healthy rivalry among the various schools in a city, each one aiming at excellence of work in order to rank as high as possible in the general summing up at the end of the term.

Fifth—That the more power we can judiciously place under the hands of the teacher in the way of promoting his own pupils so much the more is the influence of that teacher increased.

Sixth—Experience has taught that to bind all and sundry by hard and fast lines, as far as attainments in each and every subject are concerned, has a tendency to dampen the ardor of the pupil and prevent many from ever attaining to the higher forms; having in my mind now, as proof of this, several who, by reason of some minor defect, would have been consigned to oblivion had we demanded a cast-iron state of excellence in all subjects of the course.

Seventh, and lastly—It will produce better attendance; prevent cramming, cause a healthy rivalry among similar grades, and it will most certainly give both parents teachers and pupils a better idea of the progress made than any other plan.

THE UNITING OF RURAL PUBLIC SCHOOLS.

GEORGE ANSON AYLESWORTH.

Since this subject was assigned to me, it has got into Parliament; so also has the person who first suggested it to me in the County Council Chamber of Lennox and Addington. Therefore I feel responsible for it no further than to point out some of the many advantages likely to arise from the general adoption of its principle, and to discuss anticipated objections.

Since it is in the townships that men are bred, the country school is, to the nation, of greater importance than the university. It is not proposed summarily to unite all the schools of the whole township; but only to reduce the multitude of small schools into a sufficiency of larger, better equipped, more efficient, graded schools. Doubtless when perfection is achieved every home will be a school, and every parent a qualified teacher; but meanwhile, for their own greater convenience, the parents pay into the common fund the taxes that alone have potency to cause school to keep. To the taxpayer a great saving can be made by the proposed plan; half the money now raised in the township to pay the salaries of a score of teachers, and of caretakers, and the cost of fuel, furniture, equipment and repairs for a dozen school-houses, would suffice to provide a superior staff of teachers in a much better equipped building in some central place. The abandoned school-houses would make excellent public halls for the convenience of the neighborhoods.

Better teachers could be secured by the higher salaries at the command of the united Board controlling the resources of the enlarged district. While the equal school-rates would be borne by a much extended portion of the township—if not, like other municipal taxes, by the township at large—the children of the poorer sections would be provided with a first-rate school such as now is quite beyond their reach.

To become a trustee for such a school might properly tempt the ambition of a worthy man, even more than to become Reeve of the township.

A teacher's residence would be within the possibilities; thus perhaps inducing a very desirable degree of greater permanence in the incumbency at least of the head-master. More competent persons would be encouraged to choose teaching as a life-long occupation. Many eminent men, I need scarcely remind *this* assembly, began their careers by teaching school, until opportunity came, or was won, for entering some better-paid profession. I do not say that this practice is altogether to be deplored, though it was sometimes bad for the small rural school that found itself in the sole charge of an able but inexperienced youth. The same youth employed in a graded school as assistant under a permanent principal of ripened skill, could have rendered better value to the community; and the youth himself would have obtained even a better start in life. The ambition of parents that their boys and girls should teach school for a time at least, does not deserve discouragement. The contemplated plan would tend to overcome the most serious objections to this prevalent custom, for it would not only lessen the number of temporary young teachers, but it would render remote their chance of ever happening to have sole charge of a school.

The Inspector could pay more frequent, more prolonged, more beneficial visits to such united schools.

A vastly superior system of sanitation would become feasible—and speedy improvement in that matter is imperative.

The establishment of two or three large graded Union Schools in every township would go far to solve the Fifth Form problem.

The graded school of a large district could command a far finer library than the many small schools can afford. The Principal might do excellent service as librarian of a good public library, whose volumes could be conveniently circulated by means of the older pupils. Such a school would soon become a centre whence would radiate social and intellectual influences not easy to overestimate.

Love for the little ones is the mightiest motive actuating mankind. Solely for their sake the troublesome burden of the schools is borne. Can any one doubt that a large, well-equipped school, officered by a competent and experienced staff, would afford to its pupils very much greater advantages—a broader, deeper, better culture than could ever be attained at a number of small schools, scattered and poor?

But distance from the homes of numbers of the pupils has hitherto prevented the growth of such larger schools. It is proposed to

overcome this obstacle by giving the trustees authority to provide, at the public expense, daily conveyance between the school-building and the distant parts of the district. This plan would place the children under the watchful eyes of their elders, morning, noon and after school—in fact, *all* the time that they are away from their parents' charge. Bad boys and girls, of whom there are generally some in every community, would have far less opportunity of imparting to their plastic school-mates intimations of immorality.

In country places winter roads would of necessity be better broken and kept open. The convenience of the people could be served also by the daily school conveyance carrying messages, mail, and perhaps, for a small fee, an occasional passenger.

But in every school section there is a teacher who pays some local ratepayer for board and lodging. Some of these local electors will perhaps be inclined to oppose any scheme that involves the elimination of their school. Yet might not such apply for the contract to carry the pupils? Not in old Ephesus alone abode Demetrius, the silversmith; human Reform in her forward march has frequently found herself confronted with Fashoda.

LIST OF MEMBERS

ONTARIO EDUCATIONAL ASSOCIATION

1899-1900.

Adams, Chas. F. ..... Sarnia.
Addison, Miss M. E., B.A. ..... Stratford.
Aldridge, Miss E. J. ..... Peterboro'.
Alexander, R. ..... Galt.
Alexander, Prof. W. J. ..... 110 Avenue Road, Toronto.
Allan, J. E. ..... Reaborn.
Allan, John ..... Paris.
Allan, Thos. ..... Durham.
Allin, M. ..... Peterboro'.
Amoss, T. A. ..... Marchmont.
Amoss, Mrs. T. A. ..... Marchmont.
Anderson, H. N. ..... Hurondale.
Anderson, John ..... Arthur.
Andrews, David ..... West Lorne.
Andrews, R. T., B.A. ..... 62 Homewood Avenue, Toronto.
Anglin, R. W., M.A. ..... Dutton.
Anning, Miss E. A ..... Belleville.
Armour, Miss Amy ..... Almonte.
Armour, Russell H. ..... Lindsay.
Armstrong, James ..... Crieff.
Arthur, Colin E., M.A ..... Cobourg.
Ashworth, John ..... Bracebridge.
Ashworth, Mrs. John ..... Bracebridge.
Aylesworth, Geo. A. ..... Newburgh, Addington County.

Baird, Miss Jean M. ..... Motherwell.
Ballard, W. H ..... Hamilton.
Balmer, Miss E. M., B.A. ..... Toronto.
Barnes, Chas. A. ..... London.
Bell, Archibald (Judge) ..... Chatham.
Bell, A. J., M.A., Ph.D. ..... Victoria College, Toronto.
Bell, Miss Lilla ..... Alliston.
Bell, Nellie ..... Alliston.
Bell, Miss Winnifred ..... Alliston.
Bell, W. M., B.A. ..... Paris.
Bennett, Allan ..... Bobcaygeon.
Bennett, J. ..... 550 Bathurst Street, Toronto.
Benson, E. B. ..... St. Thomas.
Bewell, H. ..... Mount Forest.
Bignell, Miss F. ..... Y. W. C. A., Ottawa.
Birchard, I. J., M.A., Ph.D. ..... 120 Jamieson Avenue, Toronto.
Black, James A ..... Chatham.
Blacklock, R. F. ..... Bailieboro'.

Blaney, R. J ..... 27 Howland Avenue, Toronto.
Blue, John Stuart ..... Diere Carton.
Bower, Miss Helen ..... Harriston.
Boyd, S. J. A ..... Belfast.
Brebner, John ..... Sarnia.
Brebner, D. A ..... Sarnia.
Brenton, Miss Clara ..... 188 Bruce Street, London.
Brethour, J. H., B.A. ..... Mount Forest.
Brick, Wm ..... Kingston.
Briden, W., B.A. ..... Ingersoll.
Brierley, Miss Ella M ..... Caledonia.
Brierley, Miss Fannie ..... Caledonia.
Brillinger, M. A. ..... Collingwood.
Broderick, G. E. ..... Lindsay.
Brough, T. A., B.A ..... Owen Sound.
Brown, C. E. ..... Hampton.
Brown, D. A. ..... Delmar.
Brown, J. A. ..... Whitby.
Brown, J. Coyle ..... Peterboro'.
Brown, John R. ..... Napanee.
Brown, J. W. ..... Hanover.
Brown, J. W. ..... Vandecar.
Brown, L., M.A. ..... Aylmer.
Brown, S. W., L.D.S. ..... Dunnville.
Brownlee, T ..... Little York.
Bruce, E. W., M.A. ..... 246 Borden Street, Toronto.
Bruder, W. J ..... Prescott.
Buchanan, Miss M. ..... Ingersoll.
Bunnell, Miss E. M., B.A ..... Brantford.
Burchill, Alfred M ..... Burk's Falls.
Burke, Alex. ..... Brighton.
Burritt, James H ..... Pembroke.
Burrows, F. ..... Napanee.
Burt, A. W., B..A. ..... Brantford.
Burwash, N., M.A., LL.D. ..... Victoria College, Toronto.

Caesor, L., B.A. ..... Kemptville.
Cameron, J. H., B.A. ..... University College, Toronto.
Cameron, John S. ..... Ingersoll.
Cameron, Miss Lillie J. ..... Port Elgin.
Cameron, Miss Lizzie J. ..... Essex Centre.
Campbell, A. L. ..... Fergus.
Campbell, D. ..... Orangeville.
Campbell, Miss Jean ..... 293 Wolfe Street, London.
Campbell, Miss Margaret M ..... Keene.
Campbell, N. M ..... St. Thomas.
Campbell, N. W. ..... Durham.
Carlyle, William ..... Woodstock.
Carnochan, Miss Janet ..... Niagara.
Carruthers, A., M.A. ..... University College, Toronto.
Carscadden, Thomas ..... Galt.
Chapman, W. F. ..... Toronto.
Charles, Miss Henrietta ..... Goderich.
Chase, Geo. A., B.A. ..... 36 Maitland Street, Toronto.
Cheswright, R. C. ..... Seaforth.
Chisholm, H. I., M.A. ..... Paisley.
Chisholm, W. I., M.A. ..... Paisley.
Chown, Geo. Y., B.A ..... Kingston.
Christie, Peter ..... Manchester.
Chrysler, M.A., B.A. ..... Toronto Junction.
Clapp, David ..... Harriston.
Clark, L. J ..... 104 Avenue Road, Toronto.
Clendenning, W. S ..... Walkerton.
Cloney, Miss S. L., M.A. ..... St. Catharines.
Cloutier, Victor ..... Ottawa.

Coates, Robert ..... Milton.
Cochrane, J. G ..... Jerseyville.
Coady, Professor, M.A ..... 603 Jarvis Street, Toronto.
Colbeck, F. C., B.A ..... Toronto Junction.
Colles, W. H. G ..... Chatham.
Colling, J., B.A ..... Lindsay.
Collver, Miss M. L ..... Simcoe.
Connor, J. W., B.A ..... Berlin.
Cook, Wm. A., B.A ..... Thorold.
Coombs, E., M.A., B.Pæd ..... Newmarket.
Copland, J. S., M.A ..... Brockville.
Coupland, Percy T. ..... St. Mary's.
Coutts, R. D., B.A ..... Georgetown.
Cowley, R. H. ..... Ottawa.
Craig, J. J ..... Fergus.
Craig, T. A ..... Kemptville.
Crawford, H. J., B.A ..... Parkdale Collegiate Institute, Toronto.
Crawford, J. T., B.A ..... Hamilton.
Creasor, John (Judge) ..... Owen Sound.
Crooker, Mrs. Oscar ..... Kearney.
Croskery, R. A., B.A ..... Prescott.
Cull, F. A ..... Guelph.
Cummings, Miss L. E ..... Woodstock.
Currie, Miss Louise N. ..... 90 Gerrard Street, Toronto.
Curry, Miss A. L ..... Minden.

Dale, W., M.A ..... St. Mary's.
Davidson, A. B. ..... Newmarket.
Davidson, J. J ..... Guelph.
Davidson, Miss S. Grant ..... 815 George Street, Peterboro'.
Davidson, Mrs. M. C ..... 183 Catharine Street South, Hamilton.
Davis, John S. ..... Caledonia.
Davis, Miss Minnie ..... 269 Princess Street, Kingston.
Davis, W. H ..... Hamilton.
Davison, James, B.A ..... Guelph.
Day, Isaac ..... Orillia.
Deacon, Colonel James ..... Lindsay.
Deacon, J. S ..... Milton.
Dearness, John ..... London.
DeLury, A. T., B A ..... University College, Toronto.
Dent, Miss Lilian M. ..... 17 St. James Avenue, Toronto.
Dickinson, J. A ..... 426 Pall Mall, London.
Dickson, J. D., B.A ..... Niagara Falls.
Dickson, J. E., B.A ..... Orillia.
Dickson, Mrs. J. E ..... Orillia.
Dix, David ..... Woodbridge.
Doan, Robert W ..... 216 Carlton Street, Toronto.
Dobbie, W. J., B.A ..... Guelph.
Dobie, Miss Annie ..... Owen Sound.
Dow, John Ball, B.A ..... Whitby.
Downs, Miss Lena A ..... 189 Wentworth Street, Hamilton.
Drayton, Miss Rose ..... 165 Oak Street, Toronto.
Dubbor, S ..... St. Thomas.
Duff, David ..... Jarvis.
Dulmadge, F. C ..... Ailsa Craig.
Dundas, A. A., B.A ..... Meaford.
Dunkin, Geo. H ..... Greenville.

Earngey, T. R ..... Georgetown.
Eastman, S. H., B.A ..... Meaford.
Eddy, Mrs. E. K. ..... Brooklin.
Edgar, Pelham ..... Victoria College.
Eldon, R. H ..... 343 Clinton Street, Toronto.
Elliot, Wm., B.A ..... Mitchell.
Elliott, E. H ..... Maple.

Elliott, Mabel ..... Wiarton.
Elliott, Joseph G ..... Kingston.
Elliott, T. E., B.A. ..... Weston.
Elliott, W. H., B.A. ..... Normal School, Toronto.
Ellis, W. H., M.A., M.B. ..... School of Practical Science, Toronto.
Ellis, W. S., B.A., B.Sc. ..... Kingston.
Embree, L. E., M.A ..... 33 Beatty Avenue, Toronto.
Evans, W. E. ..... Galt.
Everitt, W. S. ..... Thamesville.

Fairbairne, J. B ..... Bowmanville.
Fallis, L. K. ..... Elora.
Farewell, J. E., LL.B. ..... Whitby.
Fenton, W. J., B.A. ..... Brampton.
Ferguson, M. ..... Waterdown.
Ferguson, W. C., B.A. ..... London.
Fetterly, P. B. ..... Highgate.
Fischer, Peter ..... Waterloo.
Fletcher, J., M.A., LL.D. ..... University College, Toronto.
Forrest, William, M.D ..... 506 Parliament Street, Toronto.
Fotheringham, D ..... Toronto.
Fotheringham, G. B. ..... Ottawa.
Foucar, W. K., B.A ..... Barrie.
Fox, George M ..... Drayton.
Fraser, C. McLean, B.A. ..... Collingwood.
Fraser, Charles G ..... 83 Mackenzie Avenue, Toronto.
Fraser, Prof. W. H ..... University of Toronto.
Freeman, J. A., B.A. ..... Waterdown.
Frost, F. H., B.A. ..... Bowmanville.
Foy, F. D., B.A ..... Mitchell.

Gamble, Chas. L ..... Glen Williams.
Giffin, J. A., B.A., LL.D. ..... St. Catharines.
Giles, Miss ..... Paisley.
Giles, Miss E. ..... Brockville.
Gilfillan, James, B.A. ..... Bowmanville.
Gilfillan, J. S. ..... Lucan.
Gillespie, Peter ..... Peterboro'.
Gillis, F. C. ..... Minden.
Glassey, D.A., B.A ..... St. Mary's.
Goodwin, James ..... Grimsby.
Gordon, N ..... Orangeville.
Gordon, Rev. G. ..... Orangeville.
Gould, I. J. ..... Uxbridge.
Gourly, Richard, B.A ..... 148½ Strachan Avenue, Toronto.
Graham, Miss Hattie ..... Brockville.
Graham, John A. ..... Bunessan.
Graham, R. M. ..... London.
Grant, George ..... Orillia.
Grant, Mrs. George ..... Orillia.
Grant, Miss G. M. ..... Orillia.
Grant, James ..... Mosborough.
Gray, Henry ..... 16 Wright Avenue, Toronto.
Gray, Miss Georgie ..... Port Elgin.
Gray, N. R. ..... Wingham.
Gray, R. A., B.A. ..... London.
Green, W. J ..... Dresden.
Grier, Miss Ida M. ..... Thornbury.
Groves, W. E. ..... 127 Rose Avenue, Toronto.
Gundry, A. P ..... Ingersoll.

Hagerman, Miss Edna ..... Lynedoch.
Hagerman, Miss Myra ..... Lynedoch.
Hall, Miss Annie ..... South Monaghan.
Hallett, W. J. ..... Barrie.

Halley, Miss M. R. ..... Windsor.
Hamilton, W. J. ..... Cobourg.
Hammill, G., B.A ..... Collingwood.
Hanna, Robert ..... Elgin.
Hardie, William, B.A ..... Perth.
Hardy, E. A., B.A ..... Lindsay.
Hare, J. J., Ph.D. ..... Whitby.
Harris, Miss E ..... 183 Catharine Street, Hamilton.
Harrison, Mrs. M. ..... Pringer.
Hartman, Charles H. ..... Brantford.
Hay, J., B.A., B.D ..... Cobourg.
Heits, Edgar D. ..... Berlin.
Henderson, A. G ..... Whitby.
Henderson, Miss A. E. ..... Berlin.
Henderson, J., M.A. ..... St. Catharines.
Henry, T. M ..... Napanee.
Hicks, R. W. ..... 57 Wilson Avenue, Toronto.
Hill, E. L., B.A. ..... Guelph.
Hill, J. A ..... 27 Oak Street, Toronto.
Hogarth, J. W ..... Ailsa Craig.
Hogarth, E. S., B.A. ..... Collegiate Institute, Hamilton.
Houston, John A., M.A ..... Smith's Falls.
Howson, E. B., B.A. ..... 16 Brunswick Avenue, Toronto.
Howson, Miss Helen ..... Keene.
Huff, Miss H. E. ..... Bloomfield.
Hughes, Mrs. Ada Marean ..... 58 Henry Street, Toronto.
Hughes, Mrs. Jean ..... Woodbridge.
Hume, J. P., B.A. ..... Campbellford.
Husband, A. J., B.A. ..... Brockville.
Husband, Henry ..... Oakville.
Huston, W. I. ..... Ayton.
Hutton, M., M.A. ..... University College, Toronto.

Inglis, Miss M. E. ..... Goderich.
Innes, A. R. ..... Port Elgin.
Ireland, W. W., B.A ..... Niagara.
Irwin, William, B.A ..... Stratford.

Jardine, W. W., B.A ..... Omemee.
Jacques, M. M ..... Perth.
Jenkins, Miss E. ..... Collingwood.
Jenkins, R. S., B.A. ..... Orangeville.
Johnson, H. D ..... Strathroy.
Johnston, John ..... Belleville.
Johnston, John W. ..... East Toronto.
Johnston, William ..... Athens.
Jolliffe, O. J., B.A. ..... Ottawa.
Jones, Miss L. L ..... 374 College Street, Toronto.
Jordon, A. A. ..... Prescott.
Joy, W. L. ..... Toronto Junction.
Jupp, R. H. ..... Orillia.

Keddie, Miss H. M ..... Oshawa.
Kelly, M. J ..... Brantford.
Kennedy, Miss Una ..... Uxbridge.
Kidd, W. J., B.A. ..... 282 O'Connor Street, Ottawa.
Kilgour, J. T. ..... Preston.
Killoran, Miss K. C. ..... Seaforth.
Killoran, Miss Nancy ..... Windsor.
Kilmer, E. E. C. ..... Stratford.
Kirk, Geo ..... London.
Kirkman, Mrs. B ..... Seaforth.
Kirkwood, W. A., B.A. ..... St. Catharines.
Knight, J. H. ..... Lindsay.
Knowles, R. H ..... Hespeler.

Knowles, Mrs. R. H. ..... Hespeler.
Kuntz, Henry ..... Wellesley.

Laidlaw Miss Jean R. ..... 730 Waterloo Street, London.
Lane, J. S., B.A. ..... Chatham.
Lane, Miss M. ..... Chatham.
Lang, A. E., B.A. ..... Victoria College, Toronto.
Laschinger, S. ..... Elmira.
Lavel, Cecil F. ..... St. Thomas.
Lee, S. C., B.A. ..... Orangeville.
Lees, W. A. ..... 250 Main Street, Hamilton.
Leitch, John A. ..... Brantford.
Levan, I. M., B.A. ..... Woodstock.
Lewis, Fred W. ..... Stirton.
Libby, W., B.A. ..... Stratford.
Liddy, W. R., B.A. ..... Port Dover.
Lillie, J. T., B.A. ..... Port Elgin.
Little, J. G., B.A. ..... Ridgetown.
Little, R. A., B.A. ..... London.
Livingston, M ..... Forest.
Lloyd, F. N. ..... Barrie.
Locheed, L. T., M.A. ..... 456 Church Street, Toronto.
Lough, W. R. ..... Clinton.
Luke, M. E. ..... Oshawa.
Luton, J. T., B.A. ..... Belleville.

MacCabe, John A. ..... Normal School, Ottawa.
MacCabe, Mrs. J. A. ..... Normal School, Ottawa.
Macdonald, Miss Jessie ..... Orangeville.
MacDougall, H. S. ..... Richmond West.
MacDougall, L. J. ..... Richmond West.
Mackenzie, Miss Agnes E. ..... 77 Byron Avenue, London.
Mackenzie, Miss L. P. ..... Brantford.
MacKenzie, Miss Annie C. ..... Durham.
MacLaren, Miss Nettie ..... St. Catharines.
MacMurchy, Archibald, M.A. ..... 254 Sherbourne Street, Toronto.
MacMurchy, N., B.A ..... Elora.
Macpherson, A. W., B.A. ..... Peterboro.
Macpherson, F. F., B.A. ..... Hamilton.
Macpherson, J. A. ..... Beeton.
Macpherson, W. E., B.A. ..... Gananoque.
McAllister, Samuel ..... 99 Wilcox Street, Toronto.
McCaig, D. ..... Collingwood.
McCarthy, Miss M. ..... Madoc.
McColl, Miss Annie ..... St. Thomas.
McConnell, F. W. ..... Trenton.
McCool, J., B.A. ..... Collegiate Institute, London.
McCready, S. B. ..... Collegiate Institute, London.
McDiarmid, D. ..... Maxville.
McDonald, J., M.A. ..... Williamstown.
McDonald, Miss M. ..... Madoc.
McDougall, A. H., B.A. ..... 286 Kent Street, Ottawa.
McDougall, D. ..... Lindsay.
McDougall, N., B.A. ..... Parkhill.
McEachern, Neil ..... Jarvis Street C. I., Toronto.
McEachren, Neil S. ..... Angus.
McFayden, Donald ..... Hamilton.
McGeary, J. H., M.A. ..... St. Thomas.
McInnes, A. R. ..... Port Elgin.
McIntosh, Angus ..... Model School, Toronto.
McIntosh, W. D., B.A. ..... Carleton Place.
McIntyre, Alex. D., B.A. ..... Tilsonburg.
McIntyre, Miss Mary E. ..... Normal School, Toronto.
McKay, A. C., B.A. ..... McMaster University, Toronto.
McKee, A ..... Midland.

McKenzie, D. K. ..... St. Thomas.
McKenzie, W. F. ..... Marden.
McKee, Fred ..... Barrie.
McKee, George ..... Orillia.
McKee, Thomas ..... Barrie.
McKenna, Miss Teresa ..... St. Catharines.
McKibbon, W. R. ..... Consecon.
McKim, Thomas ..... Meaford.
McKim, W. A., B.A ..... Prescott.
McKinlay. Charles, L D.S ..... Georgetown.
McKinnon, Miss M ..... Port Elgin.
McKnight, R. ..... Owen Sound.
McLay, A., M.D ..... Woodstock.
McLean, John H ..... St. Thomas.
McLean, Miss Mary ..... Galt.
McLennan, A. J. ..... Campbellville.
McLellan, J. A., LL.D. ..... 308 John Street, Hamilton.
McMillan, A ..... 78 Major Street, Toronto.
McMillan, Hugh ..... Guelph.
McMurchie, J., B.A ..... Harriston.
McMurchie, Mrs ..... Hamilton.
McNeely, Miss L., B.A ..... Carleton Place.
McNicol, James, B.A. ..... Hagersville.
McNiece, James, B.A ..... Welland.
McPherson, A. ..... 3 Rebecca Street, Hamilton.
McQueen, Robert ..... Kirkwall.
McRitchie, A. R. ..... Caledonia.
McVicar, Archibald ..... Windsor.

Magee, Miss Isabel ..... 528 Dundas Street, London.
Mahaffy, Mrs. A ..... Bracebridge.
Mallory, F. S. ..... Burnley.
Mallory, Mrs. F. S. ..... Burnley.
Manley, Fred F., M.A. ..... 28 Maitland Street, Toronto.
Martin, Miss Alice ..... Cheapside.
Martin, Miss Lena ..... Cheapside.
Martin, S., B.A. ..... St. Mary's.
Marty, Miss A. E., M.A. ..... St. Thomas.
Marty, Miss S. E., M.A. ..... Collegiate Institute, Kingston.
Matchett, M. W ..... Peterboro'.
Matheson, D ..... Ottawa.
Mayberry, C. A., B.A., LL.B. ..... Stratford.
Meade, Robert ..... Brockville.
Meegan, J. J. ..... Regiopolis College, Kingston.
Meighan, Charles ..... Perth.
Meiklejohn, G. A. ..... Tweed.
Menger, W. O. ..... 67 Smith Avenue, Hamilton.
Merchant, F. W., M.A. ..... London.
Michell, F. L. ..... Perth.
Michell, W. C. ..... Deer Park.
Miller, G. A ..... Dresden.
Miller, Miss Letty ..... Graystock.
Mills, J. H., M.A. ..... Athens.
Mills, G. K., B.A. ..... Stratford.
Mills, W. D. ..... Durham.
Milne, J. W ..... 111 Winchester Street, Toronto.
Milner, W. S., M.A. ..... University College, Toronto.
Mitchell, Miss J. A ..... Cobourg.
Mitchell, J. W ..... Port Elgin.
Moore, T. J. ..... Guelph.
Moore, W. F. ..... Dundas.
Morgan, J. C., M.A. ..... Barrie.
Morgan, H. E ..... 91 East Avenue, Hamilton.
Morris, Miss F ..... 61 Cartier Street, Ottawa.
Morrow, J. D., B.A. ..... Glencoe.

Mosgrove, Edward.....Kirkfield.
Moshier, D. D., B.A.....Cayuga.
Mowbray, William, B.A.....Arthur.
Mulloy, C. W., B.A.....Aurora.
Mundy, E.....Oshawa.
Murch, Miss Ida.....Dresden.
Murphy, M.....Caldwell.
Murton, L. K.....Oshawa.
Murray, G. M.....Strathroy.
Murray, R. W.....12 Maitland Place, Toronto.
Murray, Thomas, B.A.....Owen Sound.
Musgrove, A. H.....Wingham.
Myer, A. N., M.A.....Beamsville.

Nairn, David.....Galt.
Nash, William.....Brampton.
Needler, G. H., Ph.D.....University College, Toronto.
Newlands, A. F.....Ottawa.
Nicol, Miss M.....Napanee.

Odell, Albert.....Cobourg.
Odell, J. W., B.A.....Cobourg.
Osborne, W. J.....Bloomfield.
Overend, Miss.....Orillia.

Palen, Mrs. J. S.....Wampoos.
Palen, Imogen.....Belleville.
Panton, Miss Jessie.....Oshawa.
Parsons, Miss Marion.....Goderich.
Parker, F. R., B.A.....Owen Sound.
Parlow, E. D.....Model School, Ottawa.
Parry, John.....Dunnville.
Passmore, S. F., M.A.....Brantford.
Paterson, Andrew, M.A.....38 Grant Avenue Hamilton.
Paterson, R. A., B.A.....Strathroy.
Patterson, G. C.....Embro
Patterson, Miss Nellie.....Burlington.
Patterson, W. J., B.A.....Carleton Place.
Pearson, E. C.....Weston.
Peene, Miss E. E.....Galt.
Penman, John.....Paris.
Phillips, Miss Ida.....421 Central Avenue, London.
Phillips, S.....Haliburton.
Pickard, Miss Annie.....Paisley.
Platt, G. D.....Picton.
Plewes, J. W.....Wallaceburg.
Porteous, Miss Jean.....366 York Street, London.
Porteous, Miss Marion.....366 York Street, London.
Pottinger, Miss S.....Sarnia.
Powell, G. K., B.A.....29 St. James Avenue, Toronto.
Power, John F., M.A.....Simcoe.
Precious, John H.....King City.
Prendergast, William.....43 Howland Avenue, Toronto.
Pretty, H.....Newmarket.
Proctor, Miss M. P.....Sarnia.
Pugsley, E., B.A.....Port Rowan.
Pye, Mrs.....Meaford.
Pye, Miss E.....Meaford.

Rand, W. E., B.A.....Clinton.
Rannie, William.....Newmarket.
Readman, Miss E.....287 Palmerston Avenue, Toronto.
Reazin, Henry.....Lindsay.
Reed, G. H., B.A., B. Pæd.....Markham.
Reid, J., M.A., LL.D.....Dundas.
Reid, T. A.....Owen Sound.

Rice, John ..... Aurora.
Riddell, F. P., B.A. ..... London.
Rioch, John M ..... Woodburn.
Ritchie, Geo. M. ..... 297 Markham Street, Toronto.
Robb, D ..... Brussels.
Robertson, Miss A ..... 34 Asken Street, London.
Robertson, D., M.D ..... Milton.
Robertson, H. S., B.A. ..... Seaforth.
Robertson, J. C., B.A. ..... Victoria College, Toronto.
Robertson, W. J., B.A., LL.B. ..... St. Catharines.
Robinson, Miss Hattie ..... St. Thomas.
Robson, Thomas C ..... Minden.
Robson, Miss Margaret ..... Minden.
Rodcliffe, S. J., B.A. ..... London.
Roe, C. C ..... Georgetown.
Rogers, J. C., B.A ..... Bradford.
Rogers, J. W. ..... 471 Dovercourt Road, Toronto.
Rose, Miss Nellie ..... Iroquois.
Ross, Mrs. M. B ..... Ottawa.
Rose, R. C., B.A. ..... Prescott.
Rowat, I. S. ..... Simcoe.
Rowe, J. S. ..... Markdale.
Roxborough, William E ..... Norwood.
Rudlen, George W., B.A. ..... Arnprior
Russell, Miss E. M ..... 72 Spadina Rd., Toronto.
Rutherford, J. R., M.D. ..... Aurora.
Rutherford, W. W., B.A ..... Aylmer.
Ryerson, C. S. ..... Orillia.
Ryerson, J., B.A. ..... Orillia.

Sager, David ..... Sterling.
Salmons, Miss M. E. ..... Hamilton.
Scott, Miss M. T. ..... Provincial Model School, Toronto.
Scott, W., B.A ..... Normal School, Toronto.
Scovell, H. R., B.A. ..... Norwood.
Seath, John, B.A. ..... 507 Huron Street, Toronto.
Seaton, E. T., B.A. ..... Cayuga.
Shantz, A. B. ..... Caledonia.
Sharp, W. J ..... Holstein.
Sheahan, John ..... Newark.
Shenick, Miss A ..... 237 Maria Street, Ottawa.
Shepherd, Mrs. Ella ..... Guelph.
Shields, A. M., B.A. ..... Campbellford.
Shortill, R. N ..... Ayr.
Shortt, A., M.A ..... Queen's University, Kingston.
Silcox, Sidney, B.A. ..... London.
Silverwood, A. E. ..... Lindsay.
Simpson, R. S ..... Collingwood.
Sinclair, S. B., B.A ..... Ottawa.
Sing, J. G ..... Meaford.
Skinner, Miss Kate, B.A. ..... Guelph.
Skelton, Miss Minnie ..... London.
Slaughter, Geo. W ..... Flesherton.
Slemon, E. T. ..... Oshawa.
Smith, Miss Claribel, B.A. ..... Smith's Falls.
Smith, E. B. ..... Ailsa Craig.
Smith, G. A., B.A ..... 190 Dunn Avenue, Toronto.
Smith, J. H., M.A ..... Ridgetown.
Smith, Joseph H ..... Hamilton.
Smith, Miss Kate ..... Port Dover.
Smith, L. C., B.A. ..... Oshawa.
Smyth, T. H., M.A., B.Sc. ..... Harbord Collegiate Institute, Toronto.
Snider, E. E., B.A ..... Arthur.
Snowdon, H. A. ..... Norwood.
Somerville, Miss M ..... Owen Sound.

Speirs, Robert M. ..... 559 Church Street, Toronto.
Spence, W. D. ..... St. Mary's.
Spotton, H. B., M.A ..... 426 Markham Street, Toronto.
Sproule, R. J. ..... Flesherton.
Sproule, E. W ..... Harrowsmith.
Squair, J., B.A. ..... University College, Toronto.
Stanley, T. D. ..... St. Mary's.
Starr, Miss H. J ..... Newmarket.
Steele, A., B.A ..... Orangeville.
Steele, Miss A. M. ..... Madoc.
Stephens, P. J ..... Smith's Falls.
Stevens, W. H., B.A ..... Lindsay.
Stevenson, A., B.A. ..... Woodstock.
Stewart, Thomas ..... Lindsay.
Stockdale, Thomas N. ..... Lang.
Stocking, Miss M. L. ..... Owen Sound.
Stocks, Miss J. A ..... 10 Bedford Road, Toronto.
Stone, S. G. ..... Seaforth.
Strang, H. I., B.A ..... Goderich.
Struthers, Miss Jean ..... Uxbridge.
Stuart, F. A., B.A ..... Lucan.
Suddaby, J. ..... Berlin.
Summerby, W. J ..... Russell.
Sunter, Miss E. ..... Meaford.
Sunter, Miss L. ..... Meaford.
Sutherland, Miss Belle ..... Ingersoll.
Sutherland, Miss Hettie ..... Ingersoll.
Symington, Miss M. I. ..... Windsor.
Syne, Miss Venetta ..... Thornbury.

Tamblyn, C. C. ..... Bowmanville.
Tamblyn, W. W. ..... Bowmanville.
Taylor, L. W. ..... Tottenham.
Taylor, Wilson, B.A ..... Chatham.
Taylor, Wm ..... Harriston.
Tennant, Miss Alice ..... Athens.
Thomas, E. L. ..... Peterboro'.
Thompson, Miss Aggie ..... Mount Brydges.
Thompson, Miss A. H. ..... Newburgh.
Thompson, Miss M. J., B.A. ..... Almonte.
Thompson, P. J., B.A. ..... Glencoe.
Thompson, R. A., B.A ..... Hamilton.
Thompson, W. W. ..... Campbellford.
Thomson, Miss L. M. ..... St. Mary's.
Tice, T. C ..... Madoc.
Tilley, W. E. ..... Bowmanville.
Torrance, R. L. ..... Guelph.
Tremier, James ..... Smithville.
Trinder, Miss M. E. ..... Simcoe.
Truscott, S. A. ..... Sydenham.
Tupper, James W., Ph.D ..... Western University, London.
Turner, J. B., B.A ..... Collegiate Institute, Hamilton.

Underhill, James A. ..... Port Perry.
Urquhart, Miss Christie ..... Belleville.

VanEvery, J. F., B.A. ..... Napanee.

Wadsworth, J. J ..... Simcoe.
Walker, Duncan, B.A. ..... Peterboro'.
Walsh, Miss Jennie ..... Millbrook.
Walsh, Rev. William ..... Brampton.
Ward, Miss Alena A ..... Lindsay.
Ward, Edward ..... Collingwood.
Ward, Mrs. E. ..... Collingwood.

Ward, Henry ..... 410 Bathurst Street, Toronto.
Ward, William ..... 131 Division Street, Kingston.
Wark, A. ..... Sarnia.
Warner, Miss M. R ..... Peterboro'.
Watters, William ..... Fordwich.
Weir, Miss A., B.A. ..... Port Hope.
Welch, E. A., LL.D. ..... Trinity University, Toronto.
Wells, Miss H. E. ..... Ancaster.
Werner, A. ..... Elmira.
Westland, Miss L. ..... 36 Craig Street, London.
Wetherell, J. E., B.A. ..... Strathroy.
White, Mrs. A. G. H. ..... 185 Carlton Street, Toronto.
Whiteford, David W ..... Hampden.
Whiting, J. E. ..... 136 Ossington Avenue, Toronto.
Wilkinson, William ..... Brantford.
Willson, Miss A. M. ..... 625 Spadina Avenue, Toronto.
Wilson, C. ..... Lyn.
Wilson, Murray ..... Woodville.
Wilson, M. Thomas, B.A. ..... Paris.
Wilson, William ..... Toronto Junction.
Wismer, J. A. ..... 16 Seaforth Avenue, Toronto.
Wood, J. W., M.D. ..... Kirkfield.
Wood, W. A. P., B.A. ..... Simcoe.
Woods, E. O. ..... Perth.
Woolverton, Algernon, M.D. ..... Hamilton.
Workman, Miss Annie J. ..... Lindsay.
Wright, A. W., B.A ..... Galt.
Wrong, Professor, M.A ..... University College, Toronto.

Yeates, A. M. ..... Brantford.
York, I. E. ..... Waterford.
Young, D ..... Guelph.
Young, D. ..... Galt.
Young, E. T. ..... 22 Blyth Street, Hamilton.
Young, Mrs. M. E. ..... 22 Blyth Street, Hamilton.

Zimmerman, W. ..... Hamilton.

Discipline

Is something with which everyone should be acquainted. A soldier without discipline would be a poor soldier indeed. It is, or should be, a prominent feature of every school curriculum.

We consider it of vital importance in our work, and endeavor, by means of good system or discipline, to inculcate habits of

Punctuality, Regularity, and Attention,

and every business man knows whether or not these are useful, desirable, in fact, necessary qualifications in those in his employ.

If you are thinking of giving your boy a business training, it might be well to examine the general facilities of a school which makes a strong point of discipline.

The **Central Business College, Toronto,** with its splendid equipment, nine regular teachers, forty typewriting machines, and every facility for producing good results, invites your consideration. Calendar free. Write—

W. H. SHAW, Principal.

THE

"Manufacturers"

LIFE INSURANCE COMPANY

Head Office, - TORONTO.

Paid to Policy-Holders—1898 - -	$116,729.68
Income—1898 - - - - -	516,166.33
Assets—1898 - - - - -	1,522,871.61
Insurance in Force—1898 - - -	13,072,724.00

Policies issued on all approved plans.

Only one condition—"Payment of Premiums."

For full information apply to any agent, or to

J. F. Junkin,

Managing Director.

The Map and School Supply Co.

LIMITED

31 KING STREET EAST, TORONTO

MANUFACTURERS AND IMPORTERS

Chemical Assay and Physical Apparatus

MAPS, GLOBES AND

General School Supplies. Pure Chemicals

MAP MOUNTING A SPECIALTY

Two Valuable Books for Teachers.

Methods in Teaching.

Edited by J. J. TILLEY.

This book, which has been prepared in accordance with the request of the Principals of County Model Schools, is now ready. It contains :

Analysis of Method, by J. J. Tilley.
Literature, by W. J. Alexander, Ph.D.
Language Training, by R. K. Row, B.A.
English Grammar, by W. H. Elliott, B.A.
Reading, by J. Dearness.
Geography, Physical and Political, by J. F. White.
Geography, Mathematical, by T. A. Kirkconell, B.A.
History, by W. Scott, B.A.
Arithmetic, by R. M. Graham.
Drawing, by A. C. Casselman.
Writing, by A. F. Newlands.

(Authorized by the Department of Education.)

No more important book has recently been published.

Crown 8vo, cloth, - $1.50.

Nothing but Names.

By H. F. GARDINER, M.A.,

Editor of the *Hamilton Times*.

This handsome volume is an inquiry into the origin of the county and township names of Ontario. It contains more than 560 pages, and may be said to be encyclopædic in its fulness of information. As a book of reference to people and places, it has a special and distinguished value, while the amount of local knowledge packed within its pages would be hard to match in any work of the kind. It has a most comprehensive index, and throws much light on the history of Ontario for the past one hundred years.

Large crown 8vo, cloth, gilt top, $2.50.

GEORGE N. MORANG & COMPANY, LIMITED

90 Wellington Street West, Toronto.

...ALL NEW...

3 Good Maps 3

Dominion of Canada

Showing Counties and Railways. Size, 84 x 50 inches. Scale, 44 miles to the inch. Adopted by all the most prominent School Boards in the country as being the only correct map. Price, $6.00.

Ontario

Showing the whole province in one continuous map, not in sections. The one long-felt want in the Public Schools of Ontario. Size 72 x 63 inches. Price, $6.00.

British Empire

The Howard Vincent Map, by T. B. Johnston. Showing the possessions, throughout the world, of the British people in 1899—their extent, population, revenue, commercial routes, with distances, Royal Navy stations and coaling stations over the world. Size, 72 x 63 inches. Price, on cloth and stained rollers, $8.00.

SPECIAL DISCOUNTS allowed to members of the O.E.A

The
Steinberger, Hendry Co.
Limited,
Map Publishers,
37 Richmond St. W.
Toronto, Ont.

Just the thing for the Professional Man

IS there anything which so completes an office or gives so business-like an appearance to correspondence, as a first-class typewriter? It may not occur to outsiders, but such is a fact all the same, that letters which are type-written *are invariably read and answered first.* Of all the typewriters on the market nothing can compare in any way with

The..... Underwood

The writing is visible from start to finish. A billing and invoicing device is incorporated in the machine. Write for catalogue.

CREELMAN BROS. TYPEWRITER Co.

OFFICES: Toronto, Montreal, Ottawa, Hamilton, London.

SELBY & COMPANY

23 Richmond St. West, Toronto

Educational Publishers

School and Kindergarten Furnishers

Agents in Canada for the

Milton Bradley Co.'s Kindergarten Goods and School Aids .....

Bouquet of Kindergarten and Primary Songs

NEARLY 3,000 SOLD

The best book published in Canada for Anniversary Entertainments, for School and Home use.

Cloth, 75c. - Paper, 50c.

We make Blackboards. Write us.

SELBY & CO. = Toronto

Everything Pertaining to

Photography

Kept in Stock or Supplied at Short Notice.

EAKINS & FERRIS

In Chemicals only the First Quality.

In Plates and Papers the Best Brands.

FREE USE OF DARK ROOM.

48 Richmond St. W., Toronto

School Supplies = =

Maps,
Globes,
Charts,
Desks,
and everything belonging to the School-room.

The best at the lowest possible price.

Our reputation for square dea[illegible]g, and supplying our customers with only

The est Slate Blackboards

during a period of fifteen years, warrant us in soliciting the patronage of

Every School Board

in Canada. Assuring you that we will serve you *better* than any other dealer, having our own quarry and the largest factory in the *world* we fear no competition.

E. N. MOYER & CO.

120 Victoria Street, - - - TORONTO.

Buffalo, N. Y.

University of Toronto

MEDICAL FACULTY

Professors, Lecturers and Demonstrators.

A. PRIMROSE, M.B., C.M. Edin., Professor of Anatomy, and Director of the Anatomical Department; Secretary of the Faculty.
H. WILBERFORCE AIKINS, B.A., M.B. Tor., Associate Professor of Anatomy.
F. N. G. STARR, M.B. Tor., Lecturer on Anatomy.
W. B. THISTLE, M.D. Tor.,
A. R. GORDON, M.B. Tor.,
R. D. RUDOLF, M.D., C.M. Edin.,
A. A. SMALL, M.B. Tor.,
K. C. MCILWRAITH, M.B. Tor.,
W. J. MCCOLLUM, M.B. Tor.,
CLARENCE L. STARR, M.B. Tor.,
} Assistant Demonstrators of Anatomy.
I. H. CAMERON, M.B. Tor., Prof. of Surgery and Clinical Surgery.
G. A. PETERS, M.B. Tor., F.R.C.S. Eng., Associate Professor of Surgery and Clinical Surgery.
A. PRIMROSE, M.B., C.M. Edin.,
B. SPENCER, M.B. Tor.,
L. M. SWEETNAM, M.B. Tor.,
H. A. BRUCE, M.B., Tor., F.R.C.S. Eng.,
W. OLDRIGHT, M.A., M.D. Tor.,
} Associate Professors of Clinical Surgery.
JOHN CAVEN, B.A., M.D. Tor., Prof. of Pathology.
JOHN AMYOT, M.B. Tor., Demonstrator of Pathology.
J. J. MACKENZIE, B.A. Tor., Lecturer on Bacteriology.
———, Professor of Medicine and Clinical Medicine.
A. MCPHEDRAN, M.B. Tor., Associate Professor of Medicine and Clinical Medicine.
H. T. MACHELL, M.D. Tor.,
W. B. THISTLE, M.B. Tor.,
} Lecturers on Diseases in Children and Clinical Medicine.
R. J. DWYER, M.B. Tor.,
G. BOYD, B.A., M.B. Tor.,
} Lecturers in Clinical Medicine.
JAMES M. MCCALLUM, B.A., M.D. Tor., Professor of Pharmacology and Therapeutics.
C. F. HEEBNER, Phm.B. Tor., Associate Professor of Pharmacology and Therapeutics.
UZZIEL OGDEN, M.D. Tor., Prof. of Gynæcology.
A. H. WRIGHT, B.A., M.D. Tor., Prof. of Obstetrics.
J. F. W. ROSS, M.B. Tor., Associate Professor of Gynæcology.
R. A. REEVE, B.A., M.D. Tor., Professor of Ophthalmology and Otology, Dean of the Faculty.
G. H. BURNHAM, M.D. Tor., F.R.C.S., Edin., Associate Professor of Ophthalmology and Otology.
G. R. MCDONAGH, M.D. Tor., Associate Professor of Laryngology and Rhinology.
W. OLDRIGHT, M.A., M.D. Tor., Prof. of Hygiene.
W. H. Ellis, M.A., M.D. Tor., Associate Professor in Toxicology.
BERTRAM SPENCER, M.D. Tor., Associate Professor of Medical Jurisprudence.
HON. DAVID MILLS, LL.B., Q.C., Legal Lecturer in Medical Jurisprudence.
DANIEL CLARK, M.D. Tor., Extra-Mural Professor of Medical Psychology.
R. RAMSAY WRIGHT, M.A., B.Sc., Edin., Professor of Biology.
A. B. MACALLUM, B.A., M.B. Tor., Ph.D. Johns Hopkins, Professor of Physiology.
R. R. BENSLEY, B.A., M.B. Tor., Assistant Demonstrator in Biology.
WM. H. PIKE, M.A., Ph.D., Prof. of Chemistry.
F. J. SMALE, B.A., Ph.D., Lecturer in Chemistry.
W. L. MILLER, B.A., Ph.D., Demonst'r of Chemistry.
F. B. KENRICK, B.A., Ph.D., Assistant Lecturer in Chemistry.
JAMES LOUDON, M.A., LL.D., Professor of Physics.
C. A. CHANT, B.A. Tor., Lecturer on Physics.

The regular course of instruction will consist of Four Sessions of eight months each, commencing September 30th.

There will be a distinct and separate course for each of the four years.

The lectures and demonstrations in the subjects of the First and Second years will be given in the Biological Laboratory and the lecture-rooms of the University.

Lectures and demonstrations in the subjects of the Third and Fourth years will be given in the building of the Medical Faculty, corner of Gerrard and Sackville Streets.

To meet the requirements of the Ontario Medical Council a course of instruction during a fifth year will be conducted. This will be entirely optional as far as the University of Toronto is concerned.

Clinical Teaching (largely bedside) in the Toronto General Hospital, Burnside Lying-in Hospital, St. Michael's Hospital, Hospital for Sick Children, and other medical charities of Toronto.

R. A. REEVE, B.A., M.D.,
Dean.

A. PRIMROSE, M.B.,
Secretary,
Biological Department, University of Toronto.

ESTABLISHED 1850. INCORPORATED BY ACT OF PARLIAMENT.

TRINITY MEDICAL COLLEGE, TORONTO.

FACULTY.

PROFESSORS.

WALTER B. GEIKIE, M.D., C.M., D.C.L., F.R.C.S.E., L.R.C.P., Lond.; Dean of the Faculty; Member of the Council of the College of Physicians and Surgeons of Ont.; Consulting Physician, Toronto General Hospital; Consulting Physician, Hospital for Sick Children.—Holyrood Villa, 52 Maitland St.
Professor of Principles and Practice of Medicine.

J. ALGERNON TEMPLE, M.D., C.M., M.R.C.S., Eng.; Gynæcologist Toronto General Hospital; Physician to the Burnside Lying-in Hospital.—205 Simcoe St.
Professor of Obstetrics and Gynæcology.

C. W. COVERNTON, M.D., C.M., M.R.C.S., Eng.; Lic. Soc. Apoth., Lond.; ex-Chairman and Member of the Provincial Board of Health.
Emeritus Professor of Medical Jurisprudence and Toxicology.

FRED LE M. GRASETT, M.B., C.M., Edin. Univ.; F.R.C.S.E; M.R.C.S., Eng.; Fell. Obstet. Soc., Edin.; Surgeon, Toronto General Hospital; Surgeon to the Hospital for Sick Children; Physician to the Burnside Lying-in Hospital; Member of the Consulting Staff, Toronto Dispensary.—208 Simcoe St.
Professor of Principles and Practice of Surgery and of Clinical Surgery.

W. T. STUART, M.D., C.M., Trin. Univ., and M.B., Tor. Univ., Professor of Chemistry, Dental College, Toronto. —195 Spadina Ave.
Professor of General and Practical Chemistry.

CHARLES SHEARD, M.D., C.M., F.T.M.C., M.R.C.S., Eng.; Medical Health Officer of the City of Toronto; Physician Toronto General Hospital; Consulting Physician to the Hospital for Sick Children.—314 Jarvis St.
Professor of Physiology and of Clinical Medicine.

G. STERLING RYERSON, M.D., C.M., L.R.C.P., L.R.C.S., Edin.; Surgeon to the Eye and Ear Dept., Toronto General Hospital.—60 College Ave.
Professor of Ophthalmology and Otology.

LUKE TESKEY, M.D., C.M., M.R.C.S., Eng.; Surgeon, Toronto General Hospital; Professor of Oral Surgery, Dental College, Toronto.—612 Spadina Ave.
Professor of Anatomy and of Clinical Surgery.

JOHN L. DAVIDSON, B.A., Tor. Univ.; M.D., C.M., M.R.C.S., Eng.; Physician Toronto General Hospital.—20 Charles St.
Professor of Clinical Medicine.

GEO. A. BINGHAM, M.D., C.M., Trin. Univ.; M.B., Tor. Univ.; Surgeon, Out-door Department, Toronto General Hospital; Surgeon to the Hospital for Sick Children and to St. Michael's Hospital.—68 Isabella St., cor. Church St.
Professor of Applied Anatomy, and Associate Professor of Clinical Surgery.

NEWTON ALBERT POWELL, M.D., C.M., Trin Univ., M.D., Bellevue Hos. Med. Coll., N.Y.; Professor of Surgery, Women's Medical College, Toronto; Surgeon Out-door Department, Toronto General Hospital; Surgeon to the Hospital for Sick Children.—Cor. College and McCaul Sts.
Professor of Medical Jurisprudence and Toxicology and Mental Diseases. Professor on Clinical Surgery and Surgical Appliances.

D. GILBERT GORDON, B.A., Tor. Univ.; M.D., C.M., Trin. Univ.; L.R.C.S. and P., Edin.; L.F.P. and S., Glasgow; Physician, Out-door Department, Toronto General Hospital.—646 Spadina Ave.
Professor of Sanitary Science and Associate Professor on Clinical Medicine.

E. B. SHUTTLEWORTH, Phar., D., Trin. Univ. F.C.S.; late Principal and Professor of Chemistry and Pharmacy, Ontario College of Pharmacy.—220 Sherbourne St.
Professor of Materia Medica and Pharmacy.

H. B. ANDERSON, M.D., C.M., F.T.M.C.; Pathologist to Toronto General Hospital; Physician to St. Michael's Hospital and to the Out-door Department, Hospital for Sick Children; Curator of the Museum.—241 Wellesley St.
Professor of Pathology, Bacteriology, and in Charge of the Trinity Microscopic Pathological Laboratory, Toronto General Hospital, and Lecturer on Clinical Medicine.

ALLAN BAINES, M.D., C.M., F.T.M.C., L.R.C.P., Lond.; Physician, Out-door Department, Toronto General Hospital; Physician to the Hospital for Sick Children.—194 Simcoe St.
Associate Professor of Clinical Medicine and Lecturer on Diseases of Children.

D. J. GIBB WISHART, B.A., Tor. Univ.; M.D., C.M., L.R.C.P., Lond.; Professor of Ophthalmology and Otology, Women's Medical College; Surgeon, Nose and Throat Department, Toronto General Hospital, St. Michael's Hospital, and Hospital for Sick Children.—47 Grosvenor St.
Professor of Laryngology and Rhinology, and Senior Demonstrator of Anatomy.

J. T. FOTHERINGHAM, B.A., Tor. Univ.; M.D., C.M., Trin. Univ.; Physician, Out-door Department, Toronto General Hospital, and the In-door Department, Hospital for Sick Children; Professor of Materia Medica, College of Pharmacy.—36 Carlton Street.
Professor on Therapeutics and the Theory and Practice of Prescribing, and Associate Professor of Clinical Medicine.

LECTURERS, DEMONSTRATORS, INSTRUCTORS AND ASSISTANTS.

C. A. TEMPLE, M.D., C.M., F.T.M.C.; Assistant Surgeon at St. Michael's Hospital, and Registrar Toronto General Hospital.—315 Spadina Ave.
First Senior Assistant Demonstrator of Anatomy.

C. B. SHUTTLEWORTH, M.D., C.M., F.T.M.C., Registrar, Toronto General Hospital; Lecturer on Chemistry, Women's Medical College.—300 Carlton Street.
Second Senior Assistant Demonstrator of Anatomy.

B. Z. MILNER. M.D., C.M., Surgeon, Out-door Department, Hospital for Sick Children; Lecturer on Surgery, Women's Medical College.—699 Spadina Avenue.

J. McMASTER, B.A., M.D., C.M., Principal School of Technicology.—116 McCaul Street.
Assistants in Practical Anatomy.

C. TROW, M.D., C.M., Trin. Univ., F.T.M.C.; L.R.C.P., Lond.; Surgeon to the Eye and Ear Department of Toronto General Hospital, and the Hospital for Sick Children.—57 Carlton St.
Clinical Lecturer on Diseases of the Eye and Ear.

W. H. PEPLER, M.D., C.M., F.T.M.C., Lond.; Physician, Out-door Department, Toronto General Hospital and the Home for Incurables; and Pathologist to Hospital for Sick Children.—Cor. John and Adelaide Sts.
Demonstrator in Pathology.

FREDERICK FENTON, M.D., C.M., F.T.M.C., Registrar, Hospital for Sick Children and Toronto General Hospital.—61 Charles Street.
Demonstrator of Histology.

H. C. PARSONS, B.A., M.D., C.M., M.R.C.S., Eng.; L.R.C.P., Lond.; Professor of Pathology, Women's Medical College; Pathologist to the Toronto General Hospital; Registrar, Hospital for Sick Children.—97 Bloor St., West.
Demonstrator of Bacteriology and Clinical Microscopy.

...THE...

Ontario Medical College

LIMITED.

Under the Distinguished Patronage of Her Excellency the
Aberdeen.

MEMBERS OF TEACHING STAFF

R. B. NEVITT, B.A., M.D., Trin., DEAN OF FACULTY. Professor of Clinical Surgery.
J. T. DUNCAN, M.D., Tor.; M.D., C.M., Trin. Professor of Anatomy.
AUGUSTA STOWE GULLEN, M.D., C.M., Vict. and Trin. Professor of Diseases of Children.
JAS. F. W. ROSS, M.D., Tor.; M.D., C.M., Trin.; L.R.C.P., Lond. Professor of Gynæcology.
D. J. GIBB WISHART, B.A., Tor.; M.D., C.M., McGill and Trinity, L.R.C.P., Lond., REGISTRAR OF FACULTY. Professor of Rhinology and Laryngology.
T. F. McMAHON, M.D., Tor.; M.D., C.M., Trin. Professor of the Principles and Practice of Medicine, and Professor of Clinical Medicine.
G. B. SMITH, M.B., Tor.; M.D., C.M., Vict. Professor of Therapeutics and Pharmacy.
J. M. MACCALLUM, B.A., Tor.; M.D., C.M., Vict.; L.S.A., Lond. Professor Ophthalmology and Otology.
N. A. POWELL, M.D., C.M., Trin.; M.D., Bellevue, N.Y. Professor of Surgery.
W. B. THISTLE, M.D., Tor.; M.D., C.M., Trin.; L.R.C.P., Lond. Assistant Professor of Diseases of Children (Clinical).
G. S. CLELAND, M.B., Tor.; M.D., C.M., Trin. Assistant Professor of Anatomy.
B. E. McKENZIE, B.A., M.D., McGill; M.D., C.M., Trin. Lecturer on Applied Anatomy, Assistant Professor of Surgery (Orthopedics).
R. SHAWE TYRRELL, M.B., Tor.; M.D., C.M., Trin.; L.R.C.P., Lond. Professor of Medical Jurisprudence.
L. M. SWEETNAM, M.D., Tor.; M.D., C.M., Vict. and Trin. Assistant Professor of Surgery (Clinical).
H. T. MACHELL, M.D., Tor.; L.R.C.P. and Lic. Mid. Edin. Professor of Obstetrics.
GRAHAM CHAMBERS, B.A., M.B., Tor.; M.D., C.M., Trin. Professor of Chemistry and Lecturer on Diseases of the Skin.
LELIA A. DAVIS, M.B., Tor.; M.D., C.M., Trin. Assistant Accoucheur, Demonstrator of Histology and Biology.
E. B. SHUTTLEWORTH, Phar. D., Trin., F.C.S. Lecturer on Bacteriology.
JENNIE GRAY, M.D., C.M., Trin. Lecturer on Gynæcology and Junior Demonstrator in Anatomy.
R. J. DWYER, M.D., C.M., Trin.; M.D., Bellevue, N.Y. Lecturer on Physical Diagnosis and Demonstrator of Pathology.
A. B. EADIE, M.D., C.M., Trin.; M.D., Bellevue, N.Y. Professor of Physiology.
BERTHA DYMOND, M.D., C.M., Trin. Assistant Accoucheur.
IDA W. LYND, M.D., C.M., Trin. Demonstrator of Materia Medica, Assistant in Anatomy, Assistant Accoucheur.
CHARLES B. SHUTTLEWORTH, M.D., C.M., Trin., F.T.M.C. Lecturer on Chemistry.
W. F. BRYANS, M.B., Tor. Lecturer on Sanitary Science.
HAROLD C. PARSONS, B.A., M.D., C.M., Trin.; M.R.C.S., L.R.C.P., Lond. Professor of Pathology and Clinical Microscopy.
E. LELIA SKINNER, M.B., Tor. Assistant in Anatomy, Assistant Accoucheur.
HERBERT A. BRUCE, M.B., Tor.; F.R.C.S., Eng. Assistant Professor of Surgery (Clinical).
W. J. McCOLLUM, M.B., Tor. Demonstrator of Practical Chemistry.
KATHERINE BRADSHAW, M.B., Tor. Demonstrator in Physiology and Assistant in Anatomy.
B. Z. MILNER, M.D., C.M., Trin. Lecturer on Surgery.
EZRA H. STAFFORD, M.B., Tor.; M.D., C.M., Vict. Lecturer on Psychology.

The regular course of instruction will consist of four sessions of eight months each, commencing September 15th.

Students may proceed to their degree before Trinity University, Toronto University, or before any other University that they may select.

Calendars and full information will be supplied upon application to

R. B. NEVITT, B.A., M.D., *Dean.*

D. J. GIBB WISHART, B.A., M.D., *Registrar.*

...erience Demonstrates THE Fact

That Total Abstainers are Better Risks for Life Insurance than Non-Abstainers.

The Insurance News,

of Manchester, England, a leading British authority, said editorially in its issue of March 15th, '99, that:

"It is now beyond demonstration that total abstainers, as a body, attain to a greater age than those who indulge in alcoholic beverages."

The Insurance and Finance Chronicle,

Our leading Canadian authority, said editorially on August 4th, '99:

"The superior vitality of total abstainers is generally admitted."

The Secepre Life Association of Great Britain

Reports that it had in force, at the close of 1898, 6750 policies for £1,120,000 in its Temperance Section, and 6350 policies for £1,161,000 in its General Section (a very even division). Its death losses during the previous fifteen years were 56.3 per cent. of the expectation in its Temperance Section, and 80.3 per cent. of the expectation in its General Section (a good showing in its General Section, but a very much better showing in its Temperance Section)

All other Companies making a similar classification of risks show similar results.

...THE...

Temperance and General Life Assurance Company

Is the Total Abstainers' Company in Canada. It has had an unparalleled mortality record. It is the Company for the best Agents and for the best Risks. Ask for "Our Advocate," the Company's Paper, and learn more about its advantages.

HON. G. W. ROSS, President. *H. SUTHERLAND, Man. Director.*

Head Office—GLOBE BUILDING, TORONTO.