Technical and Bibliographic Notes/Notes techniques et bibliographiques

The Institute has attempted to obtain the best original copy available for filming. Features of this copy which may be bibliographically unique, which may alter any of the images in the reproduction, or which may significantly change the usual method of filming, are checked below.

L'Institut a microfilmé le meilleur exemplaire qu'il lui a été possible de se procurer. Les détails de cet exemplaire qui sont peut-être uniques du point de vue bibliographique, qui peuvent modifier une image reproduite, ou qui peuvent exiger une modification dans la méthode normale de filmage sont indiqués ci-dessous.

- [ ] Coloured covers/ Couverture de couleur
- [ ] Covers damaged/ Couverture endommagée
- [ ] Covers restored and/or laminated/ Couverture restaurée et/ou pelliculée
- [ ] Cover title missing/ Le titre de couverture manque
- [ ] Coloured maps/ Cartes géographiques en couleur
- [ ] Coloured ink (i.e. other than blue or black)/ Encre de couleur (i.e. autre que bleue ou noire)
- [ ] Coloured plates and/or illustrations/ Planches et/ou illustrations en couleur
- [ ] Bound with other material/ Relié avec d'autres documents
- [ ] Tight binding may cause shadows or distortion along interior margin/ La reliure serrée peut causer de l'ombre ou de la distortion le long de la marge intérieure
- [ ] Blank leaves added during restoration may appear within the text. Whenever possible, these have been omitted from filming/ Il se peut que certaines pages blanches ajoutées lors d'une restauration apparaissent dans le texte, mais, lorsque cela était possible, ces pages n'ont pas été filmées.
- [ ] Additional comments:/ Commentaires supplémentaires:

- [ ] Coloured pages/ Pages de couleur
- [ ] Pages damaged/ Pages endommagées
- [ ] Pages restored and/or laminated/ Pages restaurées et/ou pelliculées
- [x] Pages discoloured, stained or foxed/ Pages décolorées, tachetées ou piquées
- [ ] Pages detached/ Pages détachées
- [x] Showthrough/ Transparence
- [ ] Quality of print varies/ Qualité inégale de l'impression
- [ ] Includes supplementary material/ Comprend du matériel supplémentaire
- [ ] Only edition available/ Seule édition disponible
- [ ] Pages wholly or partially obscured by errata slips, tissues, etc., have been refilmed to ensure the best possible image/ Les pages totalement ou partiellement obscurcies par un feuillet d'errata, une pelure, etc., ont été filmées à nouveau de façon à obtenir la meilleure image possible.

This item is filmed at the reduction ratio checked below/
Ce document est filmé au taux de réduction indiqué ci-dessous.

10X		14X		18X		22X		26X		30X	
								✓			
12X		16X		20X		24X		28X		32X	

THE ORIGINAL

ASTRONOMICAL OBSERVATIONS

MADE IN THE COURSE OF

A VOYAGE

TO THE

NORTHERN PACIFIC OCEAN,

FOR THE DISCOVERY OF

A NORTH EAST OR NORTH WEST PASSAGE:

WHEREIN

THE NORTH WEST COAST OF AMERICA AND NORTH EAST COAST OF ASIA WERE EXPLORED.

In His MAJESTY'S Ships the RESOLUTION and DISCOVERY,

IN THE YEARS MDCCLXXVI, MDCCLXXVII, MDCCLXXVIII, MDCCLXXIX, AND MDCCLXXX.

BY CAPTAIN JAMES COOKE, F.R.S. COMMANDER OF THE RESOLUTION, AND LIEUTENANT JAMES KING;

AND

MR. WILLIAM BAYLY,

LATE ASSISTANT AT THE ROYAL OBSERVATORY.

PUBLISHED BY ORDER OF THE COMMISSIONERS OF LONGITUDE, AT THE EXPENCE OF WHOM THE OBSERVATIONS WERE MADE.

LONDON:

PRINTED BY WILLIAM RICHARDSON, PRINTER;

AND SOLD BY P. ELMSLY, IN THE STRAND; AND MESS. MOUNT AND PAGE, ON TOWER-HILL;

BOOKSELLERS TO THE SAID COMMISSIONERS.

MDCCLXXXII.

NW
970P
C771
3d
B3
1782

INTRODUCTION.

THE discovery of a passage to the East Indies and China round the Cape of Good Hope was attended with such important advantages to the Portuguese, who claimed, and for a long time exercised, an exclusive right to that navigation, as to excite a strong desire in other maritime countries of Europe of opening to themselves a communication with those countries by some other means.

The discovery of the American continent, which also owed its rise to the same desire of possessing the riches of the East, appeared at first to be an unsurmountable barrier to those attempts, while the limits of that continent remained unknown. Several eminent Philosophers and Navigators flattered themselves that passages might be found either round its northern or southern extremity, or by the North of Europe and Asia: we find therefore that different expeditions were undertaken by the English, Spaniards, and Dutch, by those different ways. The first, for the discovery of a North West Passage, was made in 1497, by John Cabot, a native of Venice, in a ship belonging to Henry VII. fitted out at Bristol. After him, by the Captains Forbisher, Davis, Weymouth, Hudson, Button, Gibbons, Bylot, Fox, James, Gillam, Middleton, More, Smith, and others. The danger and difficulty attending those that went through the Streights of Magellan, or Cape Horn, to the South, and by Way-gats and Forbisher's Streights, to the North, confined the prospect of any advantageous passage into the Pacific Ocean to the large opening made by Hudson's Bay; but the voyages of James and Fox in the middle of the last century, and of Middleton and Ellis in this, have given little hope of any such passage to be found leading out of that bay. During the endeavours of these later navigators, the Russians, in 1648, Dishneff, Ankudenoff, and Alexeeff sailed out of the River Kolyma; in the years 1734, 1735, 1736, 1737, and 1738, the Lieutenants Moronieff, Prontshistsheff, Malgyin, Shuakoff, Offzin, Koskeleff, and others, made unsuccessful attempts from Archangel, and the rivers of Siberia; as did Shalaroff in the years 1761, 1762, and 1764,

31481

1764 *, made repeated trials for a navigable paſſage from Archangel, by the North of Siberia, into the Pacific Ocean, and with as little ſucceſs.

All further attempts for a ſhorter paſſage to the Eaſt were now dropt; for as ſufficient had been done to ſatisfy thoſe whoſe object had been commerce, ſuch enterprizes as took their riſe merely from a ſtrong deſire of gain were at an end; but a new ſpirit of diſcovery has of late years prevailed, which, owing its riſe to other motives, was conducted upon other principles, ſuch as were grounded upon a deſire to encreaſe and improve ſcience by extending our Knowledge of the Globe.

It is unneceſſary for me to ſay any thing concerning the two former Voyages performed by Captain Cooke, as they have been publiſhed by authority, and I imagine have given a full and entire ſatisfaction with reſpect to the South Seas, and make our knowledge of the globe in that quarter as complete as one could wiſh. To make it in all parts equally perfect, there wanted only a Voyage to explore the Northern Pacific Ocean; an opportunity naturally offered itſelf, when Omai, a native brought hither from the Society Iſlands, was to be carried home again; and upon Captain Cooke offering his ſervices the plan of the voyage was enlarged, and made to correſpond with his great abilities: he was to endeavour, after landing Omai, to find out the ſo much ſought for paſſage between the Northern Pacific and Atlantic Ocean, either by the North Eaſt or North Weſt; which would naturally lead him to explore the North Weſt coaſt of America, and North Eaſt of Aſia, hitherto ſo very imperfectly known, the diſtance between America and Aſia, as alſo the ſeas between them, and whether, in that part of the world, there was any approaching the North Pole.

It is not my buſineſs to ſay how far Captain Cooke has ſucceeded in ſatisfying our rational enquiries, in regard to theſe capital objects, for the account of theſe things is preparing for the Public; I have only to obſerve, that it was in the courſe of that Voyage the following Obſervations were made.

When His Majeſty's pleaſure was made known that a Voyage for the above purpoſes ſhould be undertaken, under the command of Captain Cooke, the Board of Longitude, purſuing the ſame conduct as in the former Voyages, reſolved upon ſending proper perſons on board the two Ships to make Aſtronomical and Philoſophical Obſervations.

Captain Cooke, in conjunction with Mr. King, one of his Lieutenants, undertook to comply with their inſtructions, on board the Reſolution, the ſhip Captain Cooke

* See Cox's Account of the Ruſſian Diſcoveries.

commanded;

commanded; and I engaged to do the ſame on board the Diſcovery, commanded by Captain Clerke: in the courſe of the Voyage, when, from the loſs of theſe commanders, Mr. King took the command of the Diſcovery, I removed on board the Reſolution, commanded by Captain Gore.

We were furniſhed with a proper Apparatus of Inſtruments of the beſt kind, and made by the beſt Artiſts. The following is a Schedule of thoſe I had; and, excepting the Tranſit Inſtrument, and two portable Barometers, which I alone had, they were the ſame in both ſhips.

THE SCHEDULE.

A portable Obſervatory.	
Kendal's last made Watch.	
An Aſtronomical Clock, — — — —	by SHELTON.
An Aſtron. Clock, — — — —	by ARNOLD.
An Aſtronomical Quadrant of one foot Radius, —	by BIRD.
A Tranſit Inſtrument of four feet, — — —	by Do.
A Gregorian Teleſcope of two feet Focus, — —	by Do.
An Achromatic Teleſcope of forty-ſix inches Focus, —	by DOLLOND.
Two Night Teleſcopes, — — — —	by Do.
A fifteen-inch Hadley's Sextant, — — —	by Do.
Five Thermometers, — — — —	by Do.
A Baſon for holding Quickſilver, — — —	by Do.
A fifteen-inch Hadley's Sextant, — — —	by RAMSDEN.
Two portable Barometers, — — — —	by Do.
A Bucket to hold a Thermometer for trying the heat of the Sea, at different depths,	by Do.
A Marine Barometer, — — — —	by NAIRNE.
A Marine Dipping Needle, with ſix ſteel bars, —	by Do.
An Hydroſtatical Balance, with two bottles, for weighing ſea water,	by Do.
Two ſmall Variation Compaſſes, — — —	by Do.
An Azimuth Compaſs of Knight's Conſtruction, —	by ADAMS.

All, excepting the Marine Dipping Needle and Marine Barometer, and a Balance for weighing ſalt water, have been accurately explained by Mr. Wales, in his Introduction to the Obſervations made in the Voyage before this; theſe three Inſtruments differing from thoſe we had in that Voyage, make it neceſſary to give a deſcription of them.

THE DIPPING NEEDLE.

This Inſtrument was made by Mr. Nairne (on a plan of the Rev. Mr. Mitchell, F. R. S.) improved by himſelf, and is compoſed of the following parts. (See Plate I.)

A is a hoop or ring of braſs $2\frac{3}{4}$ inches wide; *B* is a ſtrong ring of braſs graduated on one ſide, from the Horizon to the Zenith and Nadir, at 90°; this ring is moveable by means of the ſcrew *N*, till the index *P* in the Nadir points to 90°. *CC* two ſquare bars of braſs, with holes in the middle to receive two pins *e e*. In the ſmall ends of theſe pins are holes of a conical form to receive the conical points of the axis of the Needle *D*. *n n* are two ſmall ſcrews which prevent the pins *e e* from removing, when they are adjuſted at a proper diſtance a[illegible] is adjuſted by means of four ſmall ſcrews, [illegible] each ſcrew carrying two moveable balls. *g g* [illegible] Needle, when not in uſe; theſe are moveable by means [illegible] *x x x* are finger ſcrews that faſten the braſs ring which [illegible] whole inſtrument is ſuſpended on the ſtand *E*, by me[illegible] the hooks *r r*, whence it retains its vertical poſition at [illegible] the ſtand is divided into degrees, and the four cardinal points are alſo noted; the whole moves round with the Inſtrument. The index *a* is alſo moveable, which ſerves to direct the plane of the Inſtrument in the Magnetic Meridian, when once ſet to it, by means of a Compaſs, which is chiefly uſeful at land. The braſs ſcrews, *s s*, ſerve to ſecure the Inſtrument to the Binnacle, or ſome other convenient part of the Ship.

MR. NAIRN'S DESCRIPTION OF HIS MARINE BAROMETER.

The bore of the upper part of the glaſs tube of this Barometer is about three tenths of an inch in diameter, and four inches long. To this is joined a glaſs tube, with a bore about one-twentieth of an inch in diameter. The two glaſs tubes, being joined together, form the tube of this Barometer; and being filled with mercury, and inverted into a ciſtern of the ſame, the mercury falls down in the tube till it is counterbalanced by the atmoſphere.

In a common Barometer, the motion of the mercury up and down in the tube is ſo great at ſea that it is not poſſible to meaſure its perpendicular height; conſequently cannot ſhew any alteration of the weight of the atmoſphere: but in this Marine Barometer that defect is remedied. The inſtrument is fixed in gimmels, and kept in a perpendicular poſition by a weight faſtened to the bottom of it.

The

The perpendicular rising and falling of the mercury is measured by divisions on a plate divided into inches and tenths, and by a Vernies division into hundredths of an inch, which is fixed to the side of the tube.

THE BALANCE.

The Balance used for weighing Salt Water was of the common kind, with the addition of two bottles with small necks, on each of which was a mark; by holding the bottle so that the mark was nearly the height of the Eye, the same quantity of water might be poured into it, certain to less than one grain in weight.

Note, In the following Obſervations every line is a mean of three, four, five, ſix or more ſingle obſervations. Theſe means were taken by two perſons, and compared by myſelf; in doing which I took the greateſt care, whence it is hoped that very few miſtakes have eſcaped the corected.—The reſults annexed to the obſervations, as deduced by Captain Cooke and Officers, were carefully tranſcribed without any alteration whatever; as alſo ſuch remarks as I found with them.—The ſheets were all read until no error could be found; therefore I hope very few have eſcaped; but it is highly probable there will be ſome among ſuch a multiplicity of figures.

W. BAYLY.

CONTENTS.

ASTRONOMICAL OBSERVATIONS

MADE AT

DIFFERENT PLACES ON SHORE.

1776. ♂ June 11.	Received Mr. Kendal's laſt made Watch from the Royal Obſervatory. At noon it was 2′ 25″,97 too ſlow for mean time at Greenwich, and loſing at the rate of 2″,71 ſeconds per day on mean time. I then carried it on board the Diſcovery, and ſcrewed it firm to a bracket that was fixed to the bulkhead of the great cabin for that purpoſe.

Obſervations at Drake's Iſland in Plymouth Sound.

Being informed by the commanding officer that our ſtay would be uncertain, and that I muſt hold myſelf in readineſs for ſea; I did not ſet up the Clock and Obſervatory, but went on ſhore with the aſtronomical quadrant and the time-keeper.

The gunner of the fort let me have a room in his houſe adjoining to his garden, where I obſerved equal altitudes for the going of the watch, in order to ſee if it kept the ſame rate as at Greenwich.

1776.	Time per Watch of apparent noon uncorrect.	Half Interval of Obſervations.	Time per Watch at apparent Noon correct.	Watch too faſt for Mean Time.	Daily Rate of the Watch.	N° of Obſervations	Object obſerved.
	H. ′ ″	H. ′ ″	H. ′ ″	′ ″	″		
☉ July 7.	0 19 0, 87	4 54 33	0 19 7, 1	14 39, 31	Loſing	8	Sun.
♃ —— 11	0 19 28, 19	3 36 18	0 19 34, 9	14 31, 49	—1, 95	5	Sun.
♄ —— 13.	0 19 39, 00	4 48 48	0 19 47, 0	14 29, 05	1, 22	7	Sun.
♂ —— 30.	0 20 16, 14	4 32 2	0 20 32, 14	14 35, 63	+0, 38	11	Sun.

Between the 7th and 30th the watch was loſing at the rate of 0″,16 per day on mean time.

By comparing the reſult of the 7th with the compariſon at Greenwich, the watch (allowing its rate of gaining to be 2″,71 ſeconds per day) gave the longitude of Plymouth Sound 4° 33′ 56″ Weſt. But admitting that 4° 17′ is the true longitude Weſt, as deduced from former obſervations, it muſt have kept the rate of mean time during the interval.

Obſervations of a Total Eclipſe of the Moon, on Drake's Iſland in Plymouth Sound.

The Teleſcope uſed was an achromatic one of 3½ feet focus by Dollond, magnifying power 90 times. During the whole of this obſervation the ſky was very clear and free from clouds.

1776.	Time per Watch.	Mean Time.	
	H. ′ ″	H. ′ ″	
	10 8 30	9 53 54½	Firſt appearance of the penumbra } Very uncertain.
	10 11 6	9 56 30½	Beginning of the Eclipſe }
	11 11 40	10 57 4½	Beginning of the total darkneſs. } Theſe certain to a few ſeconds.
	12 45 30	12 30 54½	End of the total darkneſs. }
	13 45 0	13 30 24½	End of the Eclipſe. } Theſe uncertain.
	13 47 25	13 32 49½	Penumbra went off. }

Obſervations at Drake's Iſland continued.

1776.	Time per Watch. H. ′ ″	Mean Time. H. ′ ″	
	10 26 45	10 12 9¾	Kepler. Immerſion.
	10 33 30	10 18 54¾	Copernicus. Im.
	10 41 30	10 26 54¾	Ariſtotle. Im.
	10 43 35	10 28 59¾	Tycho. Im.
	13 5 18	12 50 42¾	Tycho. Em.
	13 19 37	13 5 1¾	Ariſtotle. Im.

By comparing the beginning and end of total darkneſs and the immerſion and emerſion of Tycho, with the ſame obſerved at Greenwich; a mean of the reſults give the longitude of Drake's Iſland, =4° 13′ 44″¾ Weſt.

1776. ♂ July 30. Occultations of two ſmall Stars behind the Moon during the time of total darkneſs at Drake's Iſland.

Time per Watch. H. ′ ″	Mean Time. H. ′ ″		
11 8 26	10 53 50, 5	Im.	This Star about the 7th Magnitude. It immerged near the Moon's South Limb.
11 39 2¾	11 24 27, 0	Em.	
11 25 17¾	11 10 42, 2	Im.	This about the 8th Magnitude. It immerged near the Moon's Eaſt Limb.
12 33 57¼	12 18 21, 6	Em.	

By comparing the above with the obſervations made at Greenwich, they give the longitude of Drake's Iſland =16′ 54″, or 4° 13′¾ Weſt, deduced from the immerſion of the ſecond ſtar.

Allowing the correction of the Moon's place deduced from the Nautical Almanack to be (0) in long. and 31″ ſubtractive from the Moon's South lat. and leſſening the Moon's diameter by 4″.

Dip of the Magnetic Needle obſerved at Drake's Iſland.

1776.	Dip of the N. end of the Needle with the Face of the Inſtrum. East.	West.	Mean.	N° of Obſervations	
	75° 20′	70° 16′	72 48	12	In obſerving the dip of the Needle, ten or more ſingle obſervations were always taken with the face of the Inſtrument to the Eaſt, and Weſt alternately; then the Poles of the Needle were changed, and the obſervations repeated.
	Poles changed.				
	73 4	73 35	73 29¾	12	
	Mean of the whole =		73 8¾		

Obſervations made at the Cape of Good Hope.

Equal Altitudes made by Capt. Cooke and Lieut. King for the going of the Time-keeper.

1776.	Time per Watch of apparent Noon uncorrect.	Half Interval of Obſervations.	Time per Watch at apparent Noon correct.	Watch ſlow for Mean Time.	Daily Rate of Watch.	N° of Obſervations.	Phenomena and Remarks.
	H. ′ ″	H. ′ ″	H. ′ ″	H. ′ ″	″		
♄ Oct. 26.	10 24 7,7	2 59 30	10 24 0,33	1 20 3,66		18	Sun.
☉ —— 27.	10 24 01,6	3 56 21	10 23 53,5	1 20 6,00	2,34	11	Sun.
☽ —— 28.	10 23 55,6	3 32 24	10 23 47,2	1 20 7,46	1,46	30	Sun.
♂ —— 29.	10 23 47,6	2 56 50	10 23 40,7	1 20 10,75	3,29	22	Sun.
☿ —— 30.	10 23 44,0	3 48 5	10 23 35,4	1 20 13,43	2,68	36	Sun.
♃ —— 31.	10 23 38,5	3 7 13	10 23 31,2	1 20 15,79	2,36	32	Sun.
☿ Nov. 6.	10 23 38,4	3 20 20	10 23 32,1	1 20 21,52	0,96	21	Sun.
♀ —— 8.	10 23 45,8	3 17 55	10 23 39,9	1 20 22,67	0,58	23	Sun.
♄ —— 9	10 23 48,5	4 14 58	10 23 41,9	1 20 26,30	3,64	24	Sun.
☽ —— 11.	10 24 0,7	4 33 42	10 23 53,1	1 20 29,42	1,35	36	Sun.
♀ —— 15.	10 24 24,1	3 1 42	10 24 19,4	1 20 41,18	2,69	8	Sun.
♄ —— 16.	10 24 33,8	3 59 27	10 24 28,2	1 20 44,39	3,21	24	Sun.
☉ —— 17.	10 24 44,8	4 8 50	10 24 39,6	1 20 45,91	1,52	23	Sun.
☽ —— 18.	10 24 55,0	4 8 3	10 24 49,5	1 20 48,89	2,99	17	Sun.
☿ —— 20.	10 25 17,5	3 39 55	10 25 13,2	1 20 54,17	2,64	24	Sun.
♃ —— 21.	10 25 31,0	4 20 59	10 25 26,8	1 20 56,18	2,01	22	Sun.

This Time-keeper N° 1. was too ſlow for mean time at Greenwich—3′ 31″,29 on the 11th of June at noon, and was loſing 1″,209 ſeconds per day on mean time.

By a mean of theſe 15 reſults, the daily rate of the time-keeper loſing on mean time is 2″,261 ſeconds. And on the 21ſt of November was ſlow for mean time 1ʰ 20′ 57″,66 at the Cape of Good Hope.

Equal Altitudes obſerved with an Aſtronomical Quadrant for finding the Rate of the Aſtronomical Clock, N° 1. by Captain Cooke and Lieutenant King.

1776.	Time per Clock at apparent Noon uncorrect.	Half Interval of Obſervations.	Time per Clock at apparent Noon correct.	Clock faſt for Mean Time.	Daily Loſs of Clock on Sidereal Time.	N° of Obſervations.	Phenomena and Remarks.
	H. ′ ″	H. ′ ″	H. ′ ″	′ ″	′ ″		
☿ Nov. 6.	11 46 57,5	3 21 22	11 46 51,2	2 57,71		20	Sun.
♀ —— 8.	11 52 44,3	3 18 17	11 52 38,4	8 35,81	1 7,1	24	Sun.
☉ —— 10.	11 58 30,1	4 21 47	11 58 22,9	14 8,30	1 10,49	24	Sun.
♄ —— 16.	12 16 19,4	4 22 5	12 16 13,0	31 0,39	1 7,85	47	Sun.
☉ —— 17.	12 19 20,1	4 30 51	12 19 13,9	33 48,84	1 8,15	34	Sun.
☽ —— 18.	12 22 20,6	4 32 56	12 22 14,5	36 36,08	1 9,36	26	Sun.
♂ —— 19.	12 25 20,7	3 18 30	12 25 16,3	39 23,83	1 8,85	22	Sun.
☿ —— 20.	12 28 26,1	4 9 24	12 28 20,8	41 13,50	1 6,93	28	Sun.
♃ —— 21.	12 31 30,0	4 46 9	12 31 23,8	45 7,90	1 8,31	36	Sun.

By a mean of theſe 8 reſults, the daily rate of the clock's loſing on ſidereal time is 1′ 8″,368.

Obſervations at the Cape of Good Hope continued.

Compariſons of the Watches N° 1, and N° 2. and of the Clocks N° 1. and N° 2.

1776.	Watches. Time by N° 1.	Watches. Time by N° 2.	Clocks. Time by N° 1.	Clocks. Time by N° 2.
	H. ′ ″	H. ′ ″	H. ′ ″	H. ′ ″
Nov. 11.	8 50 0	8 50 57¼		
12.	0 45 0	0 45 54¾		
13.	10 40 12¾	10 41 0		
14.	10 35 20¾	10 36 0		
15.	10 35 28¼	10 36 0	12 31 37½	15 25 0
16.	10 30 36¼	10 31 0	12 21 34	15 39 0
17.	10 22 43¼	10 23 0	12 21 29	15 35 0
18.	10 31 50	10 32 0	12 32 23	15 46 0
19.	10 26 55¼	10 27 0	12 31 0	15 44 43
20.	10 44 0	10 43 57½	12 49 0	16 12 47½
21.	10 21 0	10 20 51½	12 32 8	15 46 0
22.	10 27 0	10 26 46½		
23.	10 38 18	10 38 0		

N° 1. Signifies the Watch and Clock in the care of Capt. Cooke.
N° 2. The Watch and Clock in my care.

Lunar Obſervations taken on board the Reſolution at Anchor in Table Bay by Captain Cooke and Lieutenant King.

1776.	Time per Watch N°1.	Apparent Time.	Diſtance obſerved.	Altitude of the Sun and Stars.	Altitude of the Moon.	Sextant uſed.	Error of Sextant.	Barom.	Ther.	Obſerv.	Latitude in.	Longitude deduced.	Phenomena and Remarks.
	H. ′ ″	H. ′ ″	H. ′ ″	° ′	° ′		′ ″				° ′ ″	° ′ ″	
♀ Oct. 20	22 53 17	0 30 20,2	78 22 33	65 17	23 29 Ct.	B.	—1 1[illegible]	30,10	69	C		18 49 5[illegible]	Sun à ☽.
	22 53 17	0 30 20,2	78 20 40	65 17	23 29 Ct.	R. 1	+0 4[illegible]			[illegible]		18 50 18	Sun.
	22 57 50	0 32 53,0	78 22 2½	64 59	24 55 Ct.	R. 1	+2 4[illegible]			C		18 41 07	Sun.
	22 57 50	0 32 53,0	78 24 45	64 59	24 55 Ct.	B.	—1 12			K		18 20 07	Sun.
	23 23 11	0 58 14,0	78 36 2	62 41	29 33 Ct.	R. 3	—1 00			K		18 32 15	Sun.
	23 37 52	1 12 55,0	78 42 20	60 52½	32 58 Ct.	R. 2	—1 20			K		18 8 30	Sun.
	23 42 32	1 17 35,0	78 43 52	60 15	33 27 Ct.	R. 2	—0 20			C		18 22 0	Sun.
	0 12 1[illegible]	1 47 18	78 56 58	55 47	39 27 Ct.	R. 1	—0 39			C	South	17 58 4[illegible]	Sun.
	0 12 1[illegible]	1 47 18	78 57 6	55 47	39 27 Ct.	R. 2	—1 00			K	33 55 40	18 5 15	Sun.
	0 42 9	2 17 12	79 5 45	50 32	50 10 Ct.	D.	—0 30			M		18 4[illegible] 17	Sun.
	6 30 53	8 5 56	63 17 12	39 27 Ct	55 38 Ct.	D.	—0 30			K		18 27 00	α Pegaſi à ☽
	6 40 39	8 15 42	63 13 47	40 10 Ct	54 00 Ct.	D.	—0 30			C		18 3 00	α Pegaſi.
	6 40 39	8 15 42	63 12 50	40 10 Ct.	54 00 Ct.	R. 1	+0 40			K		19 7 30	α Pegaſi.
♄ —— 21.	22 57 14	0 32 27	90 43 17½	65 14	13 18 Ct.	R. 1	+0 20	30,11	74	K		19 10 4[illegible]	Sun à ☽.
	23 11 54	0 46 47	90 51 00	64 3	16 15 Ct.	R. 1	+0 20			C		19 12 4[illegible]	Sun.
	23 19 10	0 54 23	90 55 2½	63 20	17 20 Ct.	D.	+0 45			K		18 55 45	Sun.
	23 41 52	1 17 05	91 10 5	60 33	22 3 Ct.	B.	—2 45			C		18 46 30	Sun.
	23 41 52	1 17 05	91 10 3	60 33	22 3 Ct.	R. 2	—1 10			K		18 2 30	Sun.
	23 46 12	1 21 27	91 11 17	59 57	22 54 Ct.	B.	—1 10			C		18 26 4[illegible]	Sun.
	23 46 12	1 21 27	91 12 20	59 57	22 54 Ct.	R. 2	—2 45			K		18 42 00	Sun.
♂ Nov. 5	17 22 30	18 58 57	55 44 22	21 00 Ct.	48 23 { Z. D. U. L.	R. 1	+0 51	30, 4	74	C		19 0 30	Sun.
	18 25 4[illegible]	20 2 10	55 29 20	34 8 Ct.	43 12 U. L.	B.	—2 15			C		18 38 15	Sun.
☉ —— 17.	3 39 5[illegible]	3 20 13	74 0 58	43 25	30 30 U. L.	R. 1	+0 45	30,13	79	K		18 35 00	Sun. { At the Obſerva-
☿ —— 20	3 5 28	4 40 15	113 47 32	27 11	52 42 U. L.	B.	—1 02	29,96	80	C		18 39 45	Sun. { tory on Shore.
	3 5 28	4 40 15	113 46 57½	27 11	52 42 U. L.	R. 1	+0 48			K		18 10 0	Sun.
☿ —— [illegible]	3 36 1	5 10 48	113 59 27	20 56	47 7 U. L.	R. 1	+0 40			C		18 15 0	Sun.
	3 36 1	5 10 48	113 56 50	20 56	47 7 U. L.	D.	+2 32			K		18 20 0	Sun.
♃ —— 21.	12 50 42	9 4 07	56 43 5	70 6	34 4 L. L.	R.	+0 50	29,84	75	K		18 38 15	Aldebaran à ☽.
	12 8 4[illegible]	9 22 6	56 35 5	57 8	34 29 L. L.	D.	+1 55			K		18 57 45	Aldebaran à ☽.

A mean of theſe 29 ſets gives 18° 34′ 18″,3 Eaſt longitude.——N. B. C ſtands for Captain Cooke, and K for Lieutenant King, B for Bligh, and M for Mr. Mucky, Obſervers. B for Bird, D for Dollond, and R for Ramſden, makers of the Sextants uſed.——The figures 1, 2, &c. are put to diſtinguiſh the different Sextants made by the ſame makers.

Obſervations at the Cape of Good Hope continued.

Azimuths for finding the Variations of the Compaſs, by Captain Cooke.

1776.	Zen. Diſt. of the Sun's U. L.	Azimuths from the North.	Names of the Makers of Compaſſes.	Time of Obſervation.		No. of Obſ.	Variation Weſt.	Means.	Phenomena and Remarks.
	° ′ ″	° ′ ″					° ′ ″	° ′ ″	
♄ Nov. 9.	70 39 20	N 9 21 40 W	Greg.	Even.		4	20 4 40	21 56 10	Sun.
	70 11 45	8 42 30		Even.	½ round	4	23 47 40		
	69 19 45	15 30 0	Martin	Even.		4	21 12 20	21 50 40	Sun.
	69 8 15	14 5 0		Even.	½ round	4	22 29 0		
	68 39 30	14 57 30	N° 1. Knight	Even.		4	24 42 50	21 52 42	Sun.
	68 20 45	21 53 45		Even.	½ round	4	19 2 35		
	67 48 30	20 10 0	N° 2. Knight	Even.		4	21 52 40	21 40 17	Sun.
	67 28 30	22 41 15		Even.	½ round	4	21 27 55		
	66 59 14	25 42 30	Greg.	Even.		4	21 4 30	11 18 : 47	Sun.
	66 36 0	25 28 15		Even.	½ round	4	21 33 5		
	L. L.								
☉ — 10.	72 8 30	N 0 58 45 E	Greg.	Even.	½ round	4	20 57 45 W	21 51 34	Sun.
	71 53 0	0 13 44 E				4	22 45 24		
	71 23 30	6 26 15 W	Greg.	Even.	½ round	4	20 9 25	22 12 2	Sun.
	71 1 0	5 00 0				4	24 14 40		
	70 37 30	5 15 0	Greg.	Even.	½ round	4	26 25 40	22 28 42	Sun.
	70 9 30	15 50 20				4	18 31 45		
	69 36 30	14 38 45	Greg.	Even.	½ round	4	22 23 35	22 22 47	Sun.
	69 11 0	16 35 00				4	22 22 0		
		The foregoing Obſervations were made on board the Reſolution, and the following on ſhore at the Obſervatory.							
♀ — 15.	63 25 0	N 72 39 20 W	N° 1.	Even.	½ round	4	22 46 36	21 39 18	Sun.
	64 36 0	75 39 0				4	20 32 00		
	65 31 0	74 14 0	N° 2.	Even.	½ round	4	22 30 30	22 35 15	Sun.
	66 14 0	74 32 0				4	22 40 0		
	67 19 0	75 38 0	Martin	Even.	½ round	4	22 14 30	22 29 30	Sun.
	68 10 20	75 40 0				4	22 44 30		
	69 39 20	77 39 30	Greg.	Even.	½ round	4	21 49 14	21 50 17	Sun.
	70 36 30	78 04 0				4	21 51 20		
	74 45 0	55 54 0 E	N° 1.	Morn.	½ round	4	21 26 10	21 48 45	Sun.
	73 56 36	55 39 20				4	22 11 40		
	72 33 15	56 28 20	N° 2.	Morn.	½ round	4	22 1 20	22 15 25	Sun.
	71 52 45	56 38 20				4	22 29 30		
	70 37 0	56 10 20	Martin	Morn.	½ round	4	23 44 50	23 51 15	Sun.
	69 40 37	56 32 0				4	23 57 40		
	67 55 50	60 8 30	Greg.	Morn.	½ round	4	21 26 40	21 27 20	Sun.
	66 37 45	60 55 0				4	21 28 0		

A mean of all the above = 22° 6′ 35″ the variation Weſt.

Obſervations at the Cape of Good Hope continued.

Dips of the Needle obſerved on ſhore at the Obſervatory by Captain Cooke.

1776.	Facing Eaſt.	Facing Weſt.	
	° ′	° ′	
	45 11	45 28	Marked end South.
	44 39	45 07	Marked end North or Poles changed.

Mean of all 45° 6¼ the true dip.—Capt. Cooke remarked that each of the above numbers were a mean of a great many obſervations taken between the 12th and 18th of November.

☉ Nov. 10. On my arrival at the Cape of Good Hope found that Capt. Cooke had ſet up his Tent Obſervatory near the Fort, a place very much expoſed to the S. E. wind that blows very ſtrong at times, and brings ſuch clouds of ſand along with it as to render the inſtruments uſeleſs in a few minutes. Capt. Cooke adviſed me to ſet up my Tent Obſervatory near his, and not go to the uſual place, which I conſented to, for the convenience of comparing the Watches and Clocks with each other.—He alſo told me that he would go to ſea in ſeven or eight days at moſt.

☽ — 11. Went on ſhore with the Obſervatory and inſtruments, and ſet up my Obſervatory near that of Captain Cooke.—Set up my Aſtronomical Clock, and ſet it a going with the ſame length of pendulum as when going at Greenwich.

A caſk was filled with ſand for the Aſtronomical Quadrant to ſtand on.

Equal Altitudes for the Going of the Aſtronomical Clock and Watch, N° 2.

	Time of Noon per Clock uncorrect.	Half Interval of Obſervations.	Time per Clock at apparent Noon correct.	Clock faſt or ſlow for Sidereal Time.	Daily Rate of Clock.	N° of Obſervations.	Phenomena and Remarks.
	H. ′ ″	H. ′ ″	H. ′ ″	′ ″	′ ″		
				Slow			
♀ — 15.	15 6 41,4	4 26 40	15 6 31,6	18 45,4		29	Sun.
	15 6 40,5	3 6 3	15 6 30,5	18 46,5			

In the evening ſet the minute hand of the Clock forward juſt 20 minutes, without altering it otherwiſe.

				Faſt			
♄ — 16.	15 29 46,2	5. 0. 0	15 29 36,4	0 11,2	1 2,79	38	Sun.
				Slow	1 3,17	18	Sun.
☉ — 17.	15 32 51,7	5 4 30	15 32 42,4	0 51,9			
☽ — 18.	15 35 58,3	5 12 13	15 35 49,1	1 55,24	1 3,33	14	Sun.
♂ — 20.	15 42 13,2	4 14 24	15 42 4,5	4 1 56	1 3,16	12	Sun.
♄ — 21.	15 45 20,4	4 54 48	15 45 11,8	5 7,03	1 5,47	9	Sun.
♀ — 22.	15 48 30,2	4 56 12	15 48 21,8	6 10,00	1 2,97	10	Sun.
♄ — 24.	15 54 50,6	4 38 24	15 54 42,1	8 18,02	1 4,01	16	Sun.

The pendulum vibrated from 1° 35′ to 1° 37′.

Obſervations at the Cape of Good Hope continued.

Computations of the Rate of Going of the Aſtronomical Clock, and that of the Watch, N° 2. from the foregoing Obſervations, and their daily Compariſons.

1776.	Time by N° 2.	Time by the Clock.	Difference of Clock and Watch.	Clock gains of Watch per Day.	Interval of Comparisons.	Clock gains of Watch in 24 Hours.	Daily Rate of the Clock.	N° 2. loſes per Day on Sidereal Time.	N° 2. loſes per Day on Mean Time.
	H. ′	H. ′ ″	H. ′ ″	H. ′	H. ′	′ ″	′ ″	′ ″	″
Nov. 14.	22 26	15 4 42	16 38 42	3 03	24 3	3 2,62	1 3,48	4 6,10	9,50
15.	22 29	15 10 45	16 41 45	3 3	24 0	3 3,00	1 2,89	4 5,89	9,29
16.	22 29	15 33 48	17 4 48	3 1	23 51	3 2,14	1 3,17	4 5,31	8,71
17.	22 20	15 27 49	17 7 49	3 4	24 9	3 2,86	1 3,33	4 6,19	9,59
18.	22 29	15 39 53	17 10 53	3 0½	23 55	3 1,13	1 3,16	4 4,29	7,69
19.	22 24	15 37 53½	17 13 53½	3 4	24 16	3 1,97	1 3,16	4 5,13	8,53
20.	22 40	15 56 57½	17 16 57½	2 57½	23 38	3 0,69	1 4,22	4 4,91	8,31
21.	22 18	15 37 55	17 19 55	3 1	24 6	3 0,24	1 4,22	4 4,46	7,96
22.	22 24	15 46 56	17 22 56	2 59	24 16	2 57 10	1 4,01	4 1,11	4,61
23.	22 40	16 5 55	17 25 55		24 13	2 57,85	1 4,01	4 1,86	5,36
24.	22 53	16 21 54½	17 28 54½	2 59½					

Mean rate of the Clock loſing on Sidereal Time 1 3,564 ; and 7,965 { Watch loſing per Day on mean time.

The 24th at noon the Watch N° 2. was 1h 21′ 26″,56 too ſlow for mean time at the Cape.

Dip of the needle: the South Pole.

Mean of all taken on board the Diſcovery at anchor in Table Bay } = 46° 44′ 40 with the balanced needle.

Mean of all d° taken on ſhore with the balanced needle 46 43 30

Mean of all d° on board with the plain needle 46 16 28

Mean of all d° on ſhore with the plain needle 46 18 7½

Each of the above numbers were at leaſt a mean of 40 obſervations, with the poles changed one or more times in every ſet.

Obſervations made at Queen Charlotte Sound in New Zealand.

Equal Altitudes for the Going of the Clock and Watch, N° 2.

1777.	Time of Noon per Clock uncorrect.	Half Interval of Obſervations.	Time of Noon per Clock correct.	Clock ſlow for Sidereal Time.	Daily Rate of the Clock.	N° of Obſervations.	Phenomena and Remarks.
	H. ′ ″	H. ′ ″	H. ′ ″	′ ″	″		
♀ Feb. 14.	21 45 22,4	4 21 4	21 45 38,0	6 23,37	Loſing.	18	Sun.
☉ —— 16.	21 51 57,4	4 3 0	21 52 12,9	7 34,80	35,71	18	Sun.
♂ —— 18.	21 58 30,5	3 58 27	21 58 46,5	8 44,40	34,80	10	Sun.
♀ —— 21.	22 8 12,1	4 17 45	22 8 28,3	10 32,70	36,10	15	Sun.

The following times were by the Watch N° 2. the Clock being taken down.

♄ —— 22.	12 15 32,9	4 40 32	12 15 48,75				

From whence the Watch N° 2. was 11h 58′ 3″,1 ſlow for mean time the 22d at noon.
It was 11 56 45, 8 ſlow for mean time the 14th at noon.

Rate of loſing on mean time per day 9″,656.

The pendulum of the Clock N° 2. vibrated from 1° 28′ to 1° 36′ on each ſide of (O).

Obſervations at Queen Charlotte Sound continued.

Rates of the Aſtronomical Clock and Watch as deduced from the foregoing Obſervations.

1777.	Time per Watch N° 2.	Time per Clock N° 2.	Clock faſter than Watch.	Clock gets on Watch	Interval of Comparisons.	Clock gets on Watch in 24 H.	Rate of Clock loſing on Sidereal Time.	Watch loſing on Sidereal Time.	Watch loſing on Mean Time
	H. ′	H. ′ ″	H. ′ ″	′ ″	H. ′	′ ″	′ ″	′ ″	″
Feb. 14.	16 10	1 38 21½	9 28 21½	2 57½	20 29	3 37,9	+0 35,71	4 3,6	7,1
15.	12 39	22 10 19	9 31 19	3 32	24 4	3 31,4	+0 35,71	4 7,1	10,6
16.	12 43	22 17 51	9 34 51	3 30	24 0	3 30,0	+0 34,80	4 4,8	8,3
17.	12 43	22 21 21	9 38 21	3 27	23 26	3 32,0	+0 34,80	4 6,8	10,3
18.	12 9	21 50 48	9 41 48	3 8	21 35	3 29,0	+0 36,10	4 5,1	8,6
19.	9 44	19 28 56	9 44 56	4 2	27 35	3 30,9	+0 36,10	4 7,0	10,5
20.	13 19	23 7 58	9 48 58	3 29	23 28	3 33,6	+0 36,10	4 9,7	13,2
21.	12 47	22 39 27	9 52 27						
					Mean of all		+0 35,62		9,800 the Rates.

Equal Altitudes made at Queen Charlotte Sound, for the Going of the Watch N° 1. by Capt. Cooke and Lieut. King.

1777.	Time of Noon per Watch uncorrect.	Half Interval.	Time of Noon per Watch correct.	Watch ſlow for Mean Time.	Daily Rate of the Watch.	N° of Obſervations	Phenomena and Remarks.
	H. ′ ″	H. ′ ″	H. ′ ″	H. ′ ″	″		
♃ Feb. 13.	12 24 11,8	1 57 00	12 24 20, 0	11 50 18, 4	Loſing.	6	Sun.
♂ —— 18.	12 23 43,6	4 5 55	12 23 56,33	11 50 23, 0	0,92	12	Sun.
☿ —— 19.	12 23 33,5	4 23 21	12 23 47,14	11 50 26, 4	3,36	12	Sun.
♀ —— 21.	12 23 10,5	3 49 48	12 23 23,40	11 50 36, 1	4,82	12	Sun.
♄ —— 22.	12 23 0,5	3 33 13	12 23 13,05	11 50 37, 7	1,62	18	Sun.
	Equal Altitudes for the Going of the Clock N° 1.						
♀ —— 14.	21 44 46,9	4 2 11	21 44 59,12	7 2,17	Loſs.	12	Sun.
☉ —— 16.	21 51 11,5	3 50 24	21 51 23,60	8 23,64	40,73	15	Sun.
♂ —— 18.	21 57 36,6	3 41 11	21 57 48,48	9 42,10	39,23	18	Sun.
☿ —— 19.	22 0 46,6	4 4 2	22 0 59,31	10 21,97	39,87	18	Sun.
♃ —— 20.	22 3 57,4	2 56 26	22 4 8,22	11 3,06	41,08	14	Sun.
♀ —— 21.	22 7 3,6	4 19 32	22 7 17 20	11 43,33	40,27	20	Sun.

By a mean of theſe 5 reſults the daily rate of the Clock loſing on ſidereal time is 40″,239. The pendulum of N° 1. vibrated 1° : 35′ at a medium.

Obſervations at Queen Charlotte Sound continued.

Rate of the Watch N° 1. deduced from the foregoing Obſervations, and the Compariſons with the Clock N° 1.

1777.	Mean Time when Compariſon was made.	Time by Watch.	Watch ſlow for Mean Time.	Daily Rate nearly.	Daily Rate on Mean Time.
	H. ′ ″	H. ′ ″	H. ′ ″	″	″
Feb. 14.	20 15 54,60	8 25 38,5	11 50 16,1	1,67	1,43
15.	24 26 55,28	12 36 37,5	11 50 17,8	4,58	4,47
16.	24 41 1,71	12 50 39,35	11 50 22,3	0,34	0,32
17.	25 42 22,70	13 52 0,0	11 50 22,7	1,11	1,17
18.	24 12 23,81	12 22 0,0	11 50 23,8	3,78	3,75
19.	24 26 27,59	12 36 0,0	11 50 27,6	5,72	5,53
20.	25 16 51,82	13 26 18,5	11 50 33,3	4,78	4,64
21.	26 0 38,10	14 10 0,0	11 50 38,1		

By a mean of theſe refults the Watch N° 1. was loſing 3″,04 per day on mean time.

Mr. King computes, that on the 22d at noon it was 11^h 50′ 37″,4 too ſlow for mean time at Charlotte Sound.

Compariſons of the Clocks and Watches.

1777.	Time by Clock N°1.	Time by Watch N°1.	Time by Clock N°1.	Time by Clock N°2.	Time by Watch N°1.	Time by Watch N°2.
	H. ′ ″	H. ′ ″	H. ′ ″	H. ′ ″	H. ′ ″	H. ′ ″
Feb. 14.	17 45 45	8 25 38¼	18 32 0	18 32 27	3 35 0	3 28 27¼
15.	22 0 37	12 36 37½	22 3 0	22 3 40½	12 35 37½	12 29 0
16.	22 18 0	12 54 39¼	22 25 0	22 25 45	12 54 0	12 47 15⅓
17.	23 22 40¼	13 32 0	22 28 0	22 28 50	12 54 52¾	12 48 0
18.	21 35 52¾	12 22 0	21 59 0	21 59 54¾	12 28 00	12 20 59
19.	22 23 15	12 36 0	22 17 0	22 17 58¾	9 56 00	9 48 55
20.	23 7 1¾	13 26 18½			13 21 12¾	13 14 0
21.	23 54 10	14 10 0			14 9 0	14 1 40
					12 41 0	12 33 34

Diſtance of the Moon and Sun from Stars obſerved by Captain Cooke and Lieutenant King at Queen Charlotte Sound.

1777.	Time by the Watch N° 1.	Apparent Time.	Diſtances obſerved.	Alt. of the Sun & Stars, Sun's Center.	Z. D. ☽'s U. L.	Sextant uſed.	Error of Sextant.	Barometer.	Thermom.	Obſervators	Latitude in	Longitude deduced.	Phenomena and Remarks.
	H. ′ ″	H ′ ″	H. ′ ″	° ′	° ′		′ ″	″	°		° ′ ″	° ′ ″	
21 Feb. 13.	13 9 3	0 44 43	66 38 35	60 32	68 37	D.	+1 47	30,08	61	K	41 5 54 S.	174 51 5 E.	Sun à ☽.
	13 17 18	0 52 48	66 42 10	59 54	67 24	D.	+1 47	30,08	61	C	Ditto	174 15 30	Do.
	13 17 18	0 52 48	66 44 40	59 54	67 24	R. 2.	—0 10	30,08	61	K		173 57 30	Do.
	13 26 22	1 02 02	66 47 30	59 17	66 7	B.	+0 31	30,08	61	C		174 22 15	Do.
	13 26 22	1 2 2	66 49 05	59 17	66 7	R. 2.	—0 10	30,08	61	K		173 55 30	Do.
	13 32 44	1 8 14	66 51 20	58 29	65 8	R. 2.	0 0	30,08	61	C		174 4 45	Do.
	13 32 44	1 8 14	66 49 55	58 29	65 8	B.	+0 31	30,08	61	K		174 24 45	Do.

Obſervations at Charlotte Sound continued.

Lunar Obſervations by Captain Cooke and Lieutenant King continued.

1777.	Time by the Clock.	Apparent Time.	Diſtances obſerved.	Alt. of the Sun & Stars, Sun's Center	Z.D. ☽'s U. L.	Sextant uſed.	Error of Sextant.	Barometer.	Thermom.	Obſervators	Latitude in	Longitude. deduced.	Phenomena and Remarks.
	H. ′ ″	H. ′ ″	° ′ ″	° ′	° ′		′ ″		°		° ′ ″	° ′ ″	
♄ Feb. 15.	1 30 35	3 41 53	94 9 15	34 3	66 49	R. 1	+0 50	30,04	61½	K	41 5 54 S.	174 6 30 E.	Sun à ☽.
	1 50 56	4 2 12	94 18 0	30 20	64 43	R. 2	+0 30	30,04	61	K	Ditto.	173 45 0	Do.
	2 21 7	4 32 21	94 27 55	24 42	62 7	D. 1	+1 15	30,02	66	K		174 4 0	Do.
	2 32 43	4 45 55	94 33 5	22 9	61 7	B.	+0 25	30,06	66	K		174 19 50	Do.
♂ — 18.	5 36 18	7 37 27	36 45 17½	29 44	65 39	B.	+0 35	29,81	59	C		174 51 0	Aldebaran à ☽.
	5 36 18	7 37 27	36 45 7½	29 44	65 39	R.	+1 5	Ditto.		K		174 42 15	Do.
	5 43 25	7 44 33	36 47 39	29 12	65 16	R. 1	+1 5			C		174 40 15	Do.
	5 43 25	7 44 33	36 47 50	29 12	65 16	B.	+0 35			K		174 46 0	Do.
	5 53 30	7 58 9	36 50 17	28 21	64 47	D.	+1 50			C		174 57 14	Do.
	5 53 30	7 58 9	36 52 20	28 21	64 47	R. 2	+0 30			K		174 32 45	Do.
	6 1 33	8 5 51	36 55 0	27 41	64 29	R. 2	+0 30			C		174 39 00	Do.
	6 1 33	8 5 51	36 53 38	27 41	64 29	D.	+1 50			K		174 41 15	Do.
	6 10 30	8 11 37	43 20 25	16 31	64 10	R. 2	+0 30			C		174 28 15	Regulus à ☽.
	6 10 30	8 11 37	43 19 00	16 31	64 10	D.	+1 50			K		174 25 30	Do.
	6 17 59	8 19 6	43 16 20	17 32	63 57	D.	+1 50			C		174 10 45	Do.
	6 17 59	8 19 6	43 18 42	17 32	63 57	R. 2	+0 30			K		174 41 45	Do.
	6 30 25	8 31 27	43 12 58	19 30	63 41	R. 1	+1 05			K		174 1 0	Do.
	6 40 25	8 41 29	43 8 35	20 57	63 35	R. 1	+1 05			C		173 50 30	Do.
	6 40 25	8 41 29	43 9 37	20 57	63 35	B.	+0 35			K		173 57 45	Do.
♂ — 19.	5 35 40	7 33 41	49 40 25	29 45	59 24	B.	+0 35			C		174 26 30	Aldebaran à ☽.
	5 35 40	7 33 41	49 40 10	29 45	59 24	R. 1	+1 5	29,90	54½	K		174 23 15	Do.
	5 42 10	7 40 11	49 42 10	29 15	68 48	R. 1	+1 5			C		174 33 00	Do.
	5 42 10	7 40 11	49 42 42½	29 15	68 48	B.	+0 35			K		174 29 15	Do.
	5 53 32	7 51 31	30 32 45	13 58	67 47	B.	+0 35			K		173 52 15	Regulus à ☽.
	6 1 36	7 59 34	30 31 20	15 13	67 6	B.	+0 35			C		174 35 0	Do.
	6 1 36	7 59 34	30 29 17½	15 13	67 6	R. 1	+1 5			K		173 51 30	Do.
	6 12 38	8 10 35	49 51 57	16 29	66 6	D.	+2 5			C		174 42 15	Aldebaran à ☽.
	6 12 38	8 10 35	49 54 12	16 29	66 6	R. 2	+0 30			K		174 23 45	Do.
	6 18 37	8 16 33	49 56 6	25 52	65 51	R. 2	+0 30			C		174 32 15	Do.
	6 18 37	8 16 33	49 53 35	25 52	65 51	D.	+2 15			K		174 50 15	Do.
	6 24 15	8 22 10	30 23 45	18 41	65 26	R. 2	+0 30			C		174 40 15	Regulus à ☽.
	6 24 15	8 22 10	30 20 42	18 41	65 26	D.	+2 25			K		174 5 15	Do.
	6 28 56	8 26 51	30 19 55	19 23	65 10	D.	+2 15			C		174 49 45	Do.
	6 28 56	8 26 51	30 22 20	19 23	65 10	R. 2	+0 30			K		174 5 15	Do.

A mean of all theſe 41 ſets is 174° 23′ 32″ for the longitude Eaſt.
A mean of 16 ſets, taken to the Weſt, and reduced to Charlotte Sound by means of the Watch N° 1. gave 174° 35′ 17″ Eaſt.
A mean of 36 ſets, taken to the Eaſt, gave 174° 11′ 14″ Eaſt, when reduced to Charlotte Sound by N° 1.

Dip of the Magnetic Needle.

Eaſt.	Weſt.	Mean Dif.
° ′	° ′	° ′ ″
63 30	64 10	63 56 15
63 15	64 30	
Poles changed.		
64 15	63 15	63 42½
64 20	63 1	

A mean of all = 63 49 22 the dip of the S. end of the needle taken on ſhore at the Obſervatory.

Obſervations at Charlotte Sound continued.

Azimuths obſerved in Queen Charlotte Sound by Captain Cooke.

1777.	Altitudes of the Sun.	Azimuths obſerved.	Maker of the Compaſſes.		Variation.	Mean Variation.
	° ′	° ′			° ′ ″	° ′ ″
♂ Feb. 18.	14 44	N 78 18 E.	Greg.	½ round	13 9 40 E.	13 3 25
	15 19	78 9⅔			12 57 30	
	15 46	77 35	Knight N° 2.	½ round	13 8 20	13 3 10
	16 7⅔	77 25⅔			12 58 0	
	17 15⅓	77 13⅓	Martin.	½ round	11 14 0	11 33 15
	17 54	76 58⅓			11 52 30	
	26 26⅔	67 10	Knight N° 1.	½ round	13 42 20	13 2 10
	27 47½	67 18⅓			12 22 0	
	30 27	65 26⅔	Knight N° 2.	½ round	11 34 40	12 0 40
	34 47⅔	64 13⅔			12 26 40	
	31 37	61 15	Knight N° 1.	½ round	14 33 20	13 12 15
	32 14¼	63 17½			11 51 10	
	33 4¼	62 15	Knight N° 3.	½ round	11 59 20	12 44 5
	34 32¼	59 7½			13 23 50	

Mean = 12° 40′, the Variation Eaſt.

Lunar Obſervations.

1777.	Time per Clock N° 2.	Apparent Time.	Diſtance obſerved.	Alt. of the Sun & Stars.	Z. Diſt. ☽'s U.L.	Sextant.	Error of Sextant.	Barom.	Ther.	N° of Obſervat.	Latitude in	Longitude deduced.	Phenomena and Remarks.
	H. ′ ″	H. ′ ″	° ′ ″	° ′	° ′		′ ″		°		° ′ ″	° ′ ″	
♄ Feb. 15.	0 59 29,7	3 10 8,1	93 57 49,1	39 47	70 10	D	0 0	29,60	57½	6	41 5 54 S.	174 2 15 E.	Sun à ☽.
	1 34 19,7	3 45 53,4	94 12 0,0	33 20	66 11	D	0 0			6		173 53 21	Sun.
	2 6 48,7	4 17 18,2	94 23 11,6	27 31	63 2	R	+0 45			6		173 52 48	Sun.
♂ — 18.	5 49 24,8	7 49 35,3	36 50 8,0	28 48	64 41	D	+1 30	29,80	70	6		174 7 45	Aldebaran à ☽.
	6 3 17,0	8 3 25,7	43 23 30,0	15 13	64 9	R	+0 0			6		174 0 10	Regulus à ☽.
♃ — 19.	5 57 36,7	7 54 33,0	49 48 28,7	28 2	67 18	D	—0 1	29,94	69	6		174 28 45	Aldebaran à ☽.
	6 16 47,3	8 13 40,4	30 25 38,3	17 22	65 44	R	0 2			6		174 12 0	Regulus à ☽.

A mean of all gives 174° 5′ 18″ for the longitude Eaſt.
A mean of ſix ſets taken to the Weſt, and reduced to the Sound by means of the Watch N° 2. gives 174° 12′ 50″ Do.
By ſix taken to the Eaſt give the longitude when reduced to the Sound = 174° 23′ 30″ Eaſt.

Azimuths obſerved with a Compaſs of Dr. Knight's Conſtruction.

1777.	Zenith Diſt. of the Sun's U.L.	Azimuths obſerved.		Variation.
	° ′ ″	° ′ ″		° ′
♄ Feb. 15.	68 27 54	N 77 33 40 W	½ round	14 12 Eaſt.
	70 20 10	N 77 40 10 E		14 20
☽ — 17.	64 47 7	69 33 20		13 37
♃ — 20.	64 8 27	76 21 0	½ round	14 0
	52 12 0	55 1 0		13 17

Mean variation = 13° 54′ 36″ Eaſt

Observations at Queen Charlotte Sound continued.

Dip of the South End of the Magnetic Needle at Charlotte Sound.

Mark North. E.	Mark North. W.	Mark South. E.	Mark South. W.		
° ′ ″	° ′ ″	° ′ ″	° ′ ″		
62 0 36	67 30 48	64 24 40	64 39 24	On board.	Mean of all on board = 64° 39′ 24″.
62 5 24	67 17 24	64 37 12	64 35 12	On shore.	Mean of all on shore = 64 38 48 .

Observations made at Annamocka, one of the Friendly Islands.

Here I went on shore with my Astronomical Quadrant and Watch only, Captain Cooke not choosing to have the Observatory set up.

Equal Altitudes for the Going of the Watch N° 2.

1777.	Time of Noon per Watch uncorrect.	Half Interval of Observations.	Time of Noon per Watch correct.	Watch slow for Mean Time.	Daily Rate.	N° of Observations.	Phenomena and Remarks.
	H. ′ ″	H. ′ ″	H. ′ ″	H. ′ ″	′ ″		
☉ May 4.	9 42 44,1	2 40 6	9 44 49,1	2 11 41,7	Losing. 0 6,4	13	Sun.
☽ —— 5.	9 44 43,4	3 31 0	9 44 50,0	2 11 35,3	0 1,4	11	Sun.
♀ —— 7.	9 44 36,1	3 35 7	9 44 42,3	2 11 33,9	+0 3,5	12	Sun.
♄ —— 10.	9 44 21,2	3 6 18	9 44 27,7	2 11 37,4		8	Sun.
♄ June 7.	9 46 44,7	3 22 4	9 46 47,2	2 11 30,6		16	Sun.

By comparing the Observation of May 5th with that of June 7th, the Watch N° 2. gained 4″,70 in 33 days, or at the rate of 0″,145 per day on mean time.

May 4. A mean of three altitudes of the Sun's L. L. observed with different Hadley's Sextants was 53° 33′ 13″, the eye being 9 feet above the water—whence the latitude is 20° 15′ 04″ South.

A mean of the results of observations made May 5th, 6th, and 8th with the Astronomical Quadrant is 20° 14′ 23″ South.

Correction of the line of collimation 1′ 1″ additive; whence the mean of all four latitudes = 20° 15′ 18″¾ S.

All the Lunar Observations taken near this island, and reduced to it by means of the Watch N° 2. give its longitude = 185° 0′ 14″ East.

The variation of the compass observed — 8° 32′ on shore.

Dip of the South End of the Needle.

Mark North. E.	Mark North. W.	Mark South. E.	Mark South. W.	
° ′	° ′	° ′	° ′	
37 30	39 46	39 46	37 35	Mean 38° 41′ 45″ observed on board.
37 6	40 0	39 39	37 35	Mean 38 35 0 observed on shore.

From a number of observations it appeared to be high water on the full and change days at 18ʰ 50′ apparent time, or 5ʰ 10′ before the Moon passed the meridian. The water rose 5 feet 1,3 inch at greatest, which was the fourth tide after the change. In general the day tides rose higher

Observations at Annamocka continued.

than the night, by 4 and 5 inches. The flood came from the E. by S. nearly. The water flowed and ebbed 6 hours and 6 hours very regular. These observations were made at a point of the bay near the sea.

Equal Altitudes of the Sun for finding the Rate of the Watch N° 1. made by Captain Cooke and Lieutenant King at Annamocka.

1777.	Time of Noon per Watch, uncorrect.	Half Interval of Observations.	Time of Noon per watch, correct	Watch slow for Mean Time.	Daily Rate of Watch.	No. of Obs.	Phenomena and Remarks.
	H. ′ ″	H. ′ ″	H. ′ ″	H. ′ ″	′ ″		
☽ May 5.	11 21 20,4	3 7 24	14 21 27,3	12 34 57,6	Getting. 0 0,66	18	Sun.
♂ —— 7.	11 21 12,5	3 36 46	11 21 19,7	12 34 56,3	0 0,39	18	Sun.
♄ —— 10.	11 21 3,3	3 53 37	14 21 9,6	12 34 55,1	0 0,39	6	Sun.
♄ June 7.	11 22 54,4	3 30 54	11 22 55,4	12 35 12,8	—0 0,59	22	Sun.

Mr. King remarks that by the Observations on the 5th, 7th, and 10th, the Watch N° 1. was gaining 0″,52 seconds per day on mean time, and on the 7th slow for mean time 12h 34′ 56″,5: on the 7th of June it was slow for mean time 12h 35′ 12″8, and losing 0″54 per day on mean time.

He found the correction of the line of collimation of his Quadrant —1′ 30″. On the 8th of May observed the Zenith Distance of the Sun's lower limb 37° 6′ 30″ from whence he computes the latitude 20° 14′ 48″ South.

Lunar Observations at Annamocka by Captain Cooke and his Officers.

1777.	Time per Watch N° 1.	Apparent Time.	Distances observed.	Alt. of Sun and Stars. S.'s L. L.	Alt. of ☽'s Center.	Sextant used.	Error of Sextant.	Barom.	Ther.	Observ.	Latitude in.	Longitude deduced.	Phenomena and Remarks.
	H. ′ ″	H. ′ ″	° ′ ″	° ′	° ′		′ ″		°		° ′ ″	° ′ ″	
♄ May 3.	10 16 59	22 55 23	47 49 6	50 36½	59 26	R. 1	+1 45	30,07	79	C	20 15 0	184 39 30	☽ à Sun.
	10 16 59	22 55 23	47 51 33	50 36½	59 26	R. 2	+0 15			K		184 48 45	Do.
	10 34 13	23 12 38	47 45 37	52 6	55 57	R. 2	+0 15			C		185 22 45	Do.
	10 34 13	23 12 38	47 43 2	52 6	55 57	D.	+1 45			K		184 54 15	Do.
	10 48 3	23 26 54	47 38 34	52 58	53 47	B.	—0 5			C		184 46 0	Do.
	10 48 3	23 26 54	47 38 27	52 58	53 27	R.	+0 15			K		184 53 0	Do.
	10 54 47	23 32 56	47 36 28	53 18	52 33	R.	+0 15			C		185 10 15	Do.
	10 54 47	23 32 56	47 35 56	53 18	52 33	B.	—0 5			K		184 47 15	Do.
					☽'s U. L.								
♄ — 12.	14 21 39	3 0 48	63 26 40	31 44	42 7	D.	+1 40	30,04	79	C		185 23 30	Do.
	14 21 39	3 0 48	63 28 20	31 44	42 7	R. 1	+0 38			K		185 4 45	Do.
	14 21 39	3 0 48	63 27 47	31 44	42 7	R. 2	—1 45					184 46 15	Do.
	14 27 44	3 6 53	63 30 25	30 4	42 54	R. 1	+0 38			C		184 57 0	Do.
	14 27 44	3 6 53	63 29 2	30 4	42 54	D.	+1 40			K		185 6 45	Do.
	14 27 44	3 6 53	63 28 55	30 4	42 54	R. 3	+1 10			B		185 24 45	Do.
	14 43 17	3 22 26	63 32 13	27 8	44 22	B.	+2 50			C		185 10 30	Do.
	14 43 17	3 22 26	63 34 39	27 8	44 22	R. 2	+1 45			K		184 31 0	Do.
	14 43 17	3 22 26	63 33 58	27 8	44 22	R. 3	+1 10		79½	M		185 20 15	Do.
	14 52 7	3 31 16	63 36 57	25 23	45 7	R. 2	+1 45			C		184 34 15	Do.
	14 52 7	3 31 16	63 35 0	25 23	45 7	B.	+2 50			K		185 0 45	Do.
					☽'s L. L.								
	17 57 41	6 36 50	30 9 25	56 51	38 47	R. 1	+1 0	30,04	78	K		185 38 15	Regulus à ☽.
	17 57 41	6 36 50	30 10 57½	56 51	38 47	R. 2	+1 10			M		186 8 0	Do.
	18 7 59	6 47 8	30 5 55	56 53	37 37	R. 2	+1 30			K		186 8 0	Do.
	18 7 59	6 47 8	30 5 47½	56 53	37 37	R. 1	+1 0			M		184 29 30	Do.
	18 7 59	6 47 8	30 5 57½	56 53	37 37	R. 3	+1 0			B		184 58 0	Do.
					☽'s U. L.								
☉ — 23	15 45 11	4 23 11	76 4 54	14 51	46 56	R. 1	+0 30	30,04	79	C		184 27 45	☽ à Sun.
	15 45 11	4 23 11	76 3 24	14 51	46 56	D.	+2 0			K		184 21 33	Do.
	15 49 44	4 27 44	76 4 45	13 34½	47 20	D.	+2 0			C		184 16 45	Do.
	15 49 44	4 27 44	76 6 10	13 34½	47 20	R. 1	+0 30			K		184 17 45	Do.
					☽'s L. L.								
	18 21 25	7 19 25	70 51 35	52 7	41 35	D.	+2 0			C		185 26 15	Spica Virginis à ☽.
	18 21 25	7 19 25	70 54 25	52 7	41 35	R. 1	+0 30			K		186 1 0	Do.
	18 49 29	7 27 29	70 51 35½	54 11	40 35	R. 2	+0 30			C		186 4 0	Do.
	18 49 29	7 27 29	70 48 47	54 11	40 35	D.	+2 0			K		185 32 30	Do.

A mean of the above gives 185° 2′ 47″½ for the longitude of Annamocka East, or 174° 57′ 12″½ West.

Obſervations at Annamocka continued.

Azimuths obſerved by Captain Cooke.

1777.	Sun's Altitude. ° ′	Sun's Azimuth ° ′	Compaſs Maker.		Variation. ° ′ ″	Mean. ° ′ ″	
♄ May 12.	10 2½	N. 57 25 E.	Greg.	½ round	8 32 0	8 32 57	7° 52′ 47″. Variation E.
	12 12¼	56 18¾			8 33 55		
	14 20½	56 7½	Knight N° 2.	½ round	7 36 50	7 46 7	
	15 4	55 26¼			7 55 26		
	16 3¾	55 32½	Do. N° 3.	½ round	7 15 50	7 42 37	
	16 43	54 16½			8 9 25		
	17 38½	54 26¼	Do. N° 4.	½ round	7 25 45	7 18 23	These obſervations were made on board the ſhip at anchor.
	18 6	54 26½			7 10 1		
	19 6	52 56½	Martin.	½ round	8 3 45	8 3 52	
	19 35	52 30			8 13 0		

Dips of the Needle.

E. ° ′	W. ° ′	
37 35	36 57	The marked end North.
37 49	36 35	Marked end South; or poles changed.

The mean dip = 37° 14′, the South end.
Theſe obſervations were taken on ſhore by Captain Cooke.

Obſervations for the Latitude at Tongotaboo.

By Captain Cooke and Lieutenant King.

	Zen. Diſtance obſerved. ⊙ U. L. ° ′ ″	Zenith Diſtance correct. ° ′ ″	Declination correct. ° ′ ″	Latitude deduced. ° ′ ″	N° of Obſervations	Barom.	Therm.
♀ June 13.	46 6 0	44 22 21	23 14 6,7 N.	21 8 15,8	1	30,06	76
⊙ —— 15.	44 11 30	44 27 55	23 20 3,4	21 7 51,4	1	30,12	78
♃ —— 26.	44 15 0	44 31 21,4	23 23 15,7	21 8 5,7	1	30,17	80
♀ —— 27.	44 13 0	44 29 21,4	23 21 4,0	21 8 17,4	1	30,20	80
♄ —— 28.	44 10 30	44 26 51,5	23 18 28,3	21 8 23,2	1	30,11	80½
⊙ —— 29.	44 7 45	44 24 6,5	23 15 28,3	21 8 38,2	1	30, 9	80
July 1, 2, and 3.	41 29 0	41 29 35,4	20 20 54,5	21 8 40,9	3	30,11	74
	38 8 30	38 8 59,7	59 17 18,9 S.	21 8 19,2	3	30,10	75
	38 45 50	38 46 20,7	59 54 40,1	21 8 19,4	3	30,11	74½

Theſe obſervations were made on ſhore with an Aſtronomical Quadrant of one foot radius, by Bird.
The correction of the line of collimation was found to be — 15″ ſeconds.
The latitude of the Obſervatory = 21° 8′ 19″ S.

Obſervations at Tongotaboo continued.

Equal Altitudes for the Going of the Clock and Watch N° 1. by Capt. Cooke and Lieut. King.

1777.	Time of apparent Noon per Clock, uncorrect.	Half Interval of Obſervations.	Time of Noon per Clock, correct.	Clock ſlow for Sidereal Time	Daily Rate of the Clock.	No. of obſervations.	Phenomena and Remarks.
	H. ′ ″	H. ′ ″	H. ′ ″	′ ″	′ ″		
♄ June 14.	5 28 9,2	3 5 12	5 28 10,5	1 53,12	Loſing.	17	Sun.
♂ — 17.	5 35 36,4	3 15 6	5 35 37,3	6 54,01	1 40,30	14	Sun.
☿ — 18.	5 38 5,2	3 51 25	5 38 6,2	8 34,96	1 40,95	18	Sun.
♃ — 19.	5 40 34,2	3 51 32	5 40 34,5	10 15,59	1 40,63	14	Sun.
♀ — 20.	5 43 3,1	3 47 26	5 43 3,31	11 56,37	1 40,78	12	Sun.
♄ — 21.	5 45 32,3	4 20 21	5 45 32,32	13 36,81	1 40,44	6	Sun.
♃ — 26.	5 57 53,2	3 58 48	5 57 52,34	22 3,22	1 41,28	30	Sun.
♀ — 27.	6 0 21,5	4 10 16	6 0 20,50	23 44,06	1 40,84	17	Sun.
♄ — 28.	6 2 50,2	3 50 29	6 2 49,0	25 24,74	1 40,68	17	Sun.
♂ July 1.	6 10 16,3	3 50 49	6 10 14,0	30 24,89	1 40,05	18	Sun.

By a mean of all the above the Clock N° 2. was loſing on ſidereal time 1′ 40″,66 per day

From the above Obſervations, and the Compariſons of the Clock N° 1. with the Watch N° 1. its rate is reduced.

1777.	Time per Watch N° 1. at Compariſon with Clock.	Mean Time of Compariſon.	Watch too ſlow for Mean Time.	Watch loſing on Mean Time per Day.	
	H. ′ ″	H. ′ ″	H. ′ ″	″	
June 14.	11 29 26,75	24 3 30,68	12 34 3,93		
15.	11 42 0,0	24 16 4,22	12 34 4,22	—0,29	
16.	11 34 52,62	28 8 58,30	12 34 5,68	—1,47	
17.	11 20 34,75	23 54 42,66	12 34 7,91	—2,25	
18.	11 44 15,75	24 18 24,89	12 34 9,14	—1,21	
19.	12 11 55,75	24 46 6,35	12 34 10,59	—1,41	By a mean of theſe 17 reſults, the daily rate of Watch N° 1. loſing on mean time is 1″,783.
20.	12 4 38,75	24 38 51,29	12 34 12,54	—1,96	
21.	11 28 24,75	24 2 38,77	12 34 14,02	—1,52	
22.	11 20 8,0	23 54 23,40	12 34 15,40	—1,39	
23.	11 25 50,50	24 0 6,84	12 34 16,34	—0,93	
24.	11 36 31,0	24 10 50,0	12 34 19,0	—2,64	
25.	11 23 16,33	23 57 36,43	12 34 20,10	—1,11	
26.	11 31 57,75	24 11 21,30	12 34 23,55	—3,41	
27.	11 25 41,50	24 0 6,96	12 34 25,46	—1,93	
28.	11 35 22,0	24 9 49,86	12 34 27,86	—2,38	
29.	11 33 3 50	24 7 32,0	12 34 30,50	—2,64	
30.	11 38 45,25	24 13 18,54	12 34 33,29	—2,78	
July 1.	11 50 24,50	24 24 58,79	12 34 34,29	—1,0	The Watch ſlow for mean time 12° 33′ 33″,2.

Obſervations at Tongotaboo continued.

Obſervations of a Solar Eclipſe at Tongotaboo by Captain Cooke and Lieutenant King.

1777.	Time by Clock N° 2. H. ′ ″	Diameter of the enlightened Part. ′ ″
July 4.	6 18 30	27 40
	6 19 52	27 15
	20 38	27 10
	21 20	27 0
	21 52	27 0
	22 34	27 0
	23 14	26 46
	23 54	26 30
	24 44	26 15
	25 21	26 10
	26 1	26 10
	26 32	26 10
	27 14	26 0
	28 0	26 0
	40 40	22 0
	41 23	22 0
	46 47	20 30
	48 11	20 20
	51 19	20 0
	52 11	20 0
	54 51	19 40
	7 19 0	14 40

Sun's Eclipſe.

Captain Cooke's Remark.

The weather was thick and hazy, with ſmall rain for many days before, and the morning of the 4th was very rainy till between 8 and 9 o' clock, when the ſun appeared, and ſome altitudes were taken. The weather became cloudy, with rain at times, but as the clouds cleared away ſometimes the Teleſcopes were got ready, and Mr. King obſerved the beginning of the eclipſe at 6^h 6′ 37″ per Clock N° 1. 23^h 46′ 28″ apparent time. He uſed a Doſlond's 3½ feet Teleſcope, magnifying power 150 times.

The foregoing diameters of the enlightened part were obſerved by Mr. King with an Hadley's Sextant. Mr. King deduced the longitude from the beginning to be 184° 47′½ Eaſt of Greenwich, or 175° 12′½ Weſt.

Lunar Obſervations made by Captain Cooke and his Officers.

	Time per Watch N° 1. H. ′ ″	Apparent Time. H. ′ ″	Diſtances obſerved. ° ′ ″	Alt. of the Sun and Stars. ° ′	Altitude of the Moon. U. L. ° ′	Sextant uſed.	Error of Sextant. ′ ″	Barom.	Therm.	Obſerved	Latitude in. ° ′ ″	Longitude deduced. ° ′ ″	Phenomena and Remarks.
♂ June 10.	18 21 43	6 56 53	63 3 20	68 52	33 37	D.	+1 52	29,94	76	C	22 8 19	185 14 0 E.	☽ à Spica Virginis.
	18 21 48	6 56 53	63 5 47	68 52	33 37	R. 3	0 0			K		185 30 0	Do.
	18 27 24	7 2 29	63 3 21	70 2	32 53	R. 3	0 0			B		185 48 0	Do.
	18 27 24	7 2 29	63 1 9	70 2	32 53	D.	+1 52			K		185 38 0	Do.
				⊙ LL.	☽ Center								
24 — 12.	13 33 33	2 8 15	80 0 30	35 38	28 36	D.	+1 20	30, 0	78	M		185 13 15	☽ à Sun.
	13 33 33	2 8 15	80 1 18	35 38	28 36	R. 2	+0 38			K		184 39 45	Do.
	13 38 1	2 12 43½	80 3 22½	35 0	29 26	R. 2	+0 38			M		184 28 30	Do.
	13 38 1	2 12 43	80 2 40	35 0	29 26	D.	+1 20			K		184 0 30	Do.

Obſervations at Tongotaboo continued.

Lunar Obſervations continued.

1777.	Time per Clock N° 1.	Apparent Time.	Diſtances obſerved.	Alt of Sun & of ✱.	Altitude of the Moon's Center.	Sextant uſed.	Error of Sextant.	Barom.	Therm.	Obſerver	Latitude in	Longitude. deduced.	Phenomena and Remarks.
	H. ′ ″	H. ′ ″	° ′ ″	° ′	° ′		′ ″	″	°		° ′ ″	° ′ ″	
♄ June 14.	8 1 30	2 33 3	103 28 47	31 47½	20 50	R.	+0 30	30, 4	78½	K	21 8 19	184 48 45 E.	☽ à Sun.
	8 8 59	2 40 31	102 30 21	30 37	21 51	D.	+2 0			K		184 33 45	Do.
					Z.D ☽U.L.								Do.
	9 0 1	3 31 28	102 49 52	21 51	56 35	R. 2	+1 0			C			
	9 0 1	3 31 28	102 50 0	21 51	56 35	R. 1	+0 30			K		184 29 55	
	9 4 47	3 36 14	102 51 47	20 57	55 34	R. 1	+0 30			C		184 30 15	Do.
	9 4 47	3 36 14	102 51 40	20 57	55 34	R. 2	+1 0			K		184 21 0	Do.
	9 10 3½	3 41 45	102 50 58	19 46	54 21	D.	+2 0			K		184 8 30	Do.
☽ — 16.	12 23 38	6 49 54	64 55 48	39 9	26 51	B.	+2 14	30,15	76	C		184 47 30	Do.
	12 23 38	6 49 54	64 58 9	39 9	26 51	R. 1	+0 30			K		184 42 15	☽ à Regulus.
	12 34 4	7 0 15	65 1 37	37 3	24 57	R. 1	+0 30			C		184 42 0	Do.
	12 34 4	7 0 15	64 59 2	37 3	24 57	B.	+2 14			K		184 22 30	Do.
♃ — 26.	3 6 15	21 6 11	108 26 57	61 42	61 43	R. 1	+0 35	30,17	79	K		184 49 0	Do.
	3 15 57	21 15 52	108 22 42	59 31	64 1	R. 2	+1 0			K		184 52 15	☽ à Sun.
	3 25 42	21 25 36	108 17 40	57 56	66 11	B.	+1 6			K		185 9 0	Do.
	3 41 51	21 41 44	108 8 53	55 29	69 52	D.	+2 0			K		184 55 45	Do.
♀ — 27.	2 35 0	20 34 12	95 34 52	66 39	45 14	R. 1	+0 15	30,20	80	K		184 43 45	Do.
	2 44 25	20 41 56	95 30 27	65 16	46 47	R. 2	+1 0			K		185 24 0	Do.
	2 53 51	20 51 41	95 25 52	63 33	49 8	D.	+2 0			K		185 11 15	Do.
	3 45 42	21 44 6	95 4 45	55 15	60 41	B.	+1 50			C		185 11 30	Do.
	3 45 42	21 44 6	95 5 52	55 15	60 41	R. 1	+0 20			K		185 8 30	Do.
	3 52 15	21 48 59	95 3 30	54 24	62 2	B.	+0 20			C		185 23 45	Do.
	3 52 15	21 48 59	95 1 15	54 24	62 2	R. 1	+1 50			K		185 16 30	Do.
	4 3 21	22 0 34	94 54 50	52 48	64 42	D.	+2 0			C		184 58 30	Do.
	4 3 21	22 0 34	94 56 40	52 48	64 42	R. 2	+1 20			K		184 33 30	Do.
	4 8 2	22 5 32	94 54 10	52 10	65 48	R. 2	+1 20			C		185 5 0	Do.
	4 8 2	22 5 32	94 53 10	52 10	65 48	D.	+2 0			K		185 3 0	Do.
												144 49 30	Do.

A mean of the above results is 184° 52′ 25″ the longitude of the Obſervatory at Tongotaboo.
Captain Cooke remarks that a mean of 131 ſets of obſervations made among the Friendly Iſlands, and reduced by means of the Watch N° 1. give the longitude of Annamocka = 185° 11′ 18″ E. and that of the Obſervatory at Tongotaboo = 184° 55′ 18″ E. of Greenwich.

Azimuths obſerved at Tongotaboo by Captain Cooke.

1777.	Altitudes of the Sun.	Azimuths of the Sun.	Maker of the Compaſs.		Variation deduced.	Mean by each Compaſs.	Phenomena and Remarks.
	° ′	° ′			° ′ ″	° ′ ″	
June 20.	15 29	N. 46 41⅓ W.	Gregory N° 1.	½ round	9 13 20	8 31 50	Sun.
	16 3	46 56⅔			9 52 26		Do.
	16 43⅔	46 21⅔	Do. N°2.	½ round	9 20 20	9 50 40	Do.
	17 9	44 35			8 51 0		Do.
	18 1	46 36⅓	Knight N° 2.	½ round	8 16 40	8 46 40	Do.
	18 28	44 53½			9 16 40		Do.
	19 13	45 25⅔	Do. N°3.	½ round	8 29 20	9 28 50	
	19 36	43 11⅔			10 28 20		
	20 4	46 6⅔	Do. N°4.	½ round	7 13 40	8 31 30	9° 11′ 48″ East Var.
	20 21½	46 16⅔			9 49 20		
	21 13	42 41⅔	Martin.	½ round	9 44 20	9 37 20	
	21 32	42 41⅔			9 30 20		

The above were obſerved on board the ſhip at anchor.

Obſervations at Tongotaboo continued.

The following were taken on ſhore at the Obſervatory. The Sun's Zenith Diſtance obſerved with an Aſtronomical Quadrant.

1777.	Zen. Diſt. ☉'s U. L. ° ′	Azimuths of the Sun. ° ′	Maker of the Compaſſes.		Variation deduced. ° ′ ″	Mean of each Compaſs. ° ′ ″	Phenomena and Remarks.
June 23.	76 40½	N 47 26⅔ E	Gregory N° 1.	½ round	10 10 20	10 37 50	10° 22′ 23″ Eaſt.
	76 11⅔	47 50			10 5 0		
	75 13⅔	46 55⅓	Do. N° 2.	½ round	10 26 40	10 24 40	
	74 58	46 46⅔			10 22 40		
	72 42	45 35	Knight N° 5.	½ round	10 6 20	10 14 40	
	72 26⅓	45 8⅓			10 23 0		
	71 48⅓	45 28⅓	Do. N° 3.	½ round	9 35 40	10 13 50	
	71 33⅓	43 51⅔			11 2 0		
	70 58⅔	44 33⅓	Do. N° 4.	½ round	9 55 40	10 13 30	
	70 41	43 46⅔			10 30 20		
	69 12⅔	42 56	Martin.	½ round	10 20 40	10 26 50	
	68 54	42 23⅓			10 33 0		
	Alt. ☉'s L. L.						
27	24 7	60 58⅓ W	Gregory N° 1.	½ round	10 47 20	10 42 20	10° 3′ 13″½
	23 27	61 33⅓			10 37 20		
	22 33	61 46⅔	Do. N° 2.	½ round	10 15 40	9 57 0	
	22 8	61 50			9 38 20		
	20 0	64 8⅓	Knight N° 5.	½ round	11 14 0	10 22 50	
	19 32	63 43⅓			9 31 40		
	18 31	64 40	Do. N° 3.	½ round	10 2 40	10 18 10	
	17 55	65 36⅔			10 33 40		
	16 51	64 38⅓	Do. N° 4.	½ round	8 51 20	8 35 30	
	16 12	64 33⅓			8 19 40		
	14 50	67 55	Martin.	½ round	10 48 20	10 23 30	
	13 59	67 41⅔			9 58 40		
	The following were taken on board the Ship at anchor by Capt. Cooke.						
July 1.	18 53	N 64 0 W	Gregory N° 3.	½ round	9 15 20	9 46 30	10° 16′ 23″ Eaſt.
	17 57	65 21⅔			10 17 40		
	16 49	66 3⅓	Do. N° 2.	½ round	9 53 0	9 51 40	
	16 20⅔	66 20			9 50 20		
	15 27⅔	66 45	Knight N° 2.	½ round	9 41 0	9 40 40	
	15 10⅔	66 55			9 40 20		
	14 40⅔	69 10	Do. N° 3.	½ round	11 35 0	12 1 20	
	14 3⅓	70 25			12 27 40		
	13 28	68 10	Do. N° 4.	½ round	9 51 0	9 37 10	
	12 27⅓	68 58⅓			10 3 20		
	14 4	69 30	Martin.	½ round	10 21 40	10 21 0	
	11 8⅓	70 0			10 20 20		

A mean of all the variations is 9° 53′ 27″ Eaſt.

Obſervations at Tongotaboo continued.

Dips of the South End of the Needle obſerved on ſhore at the Obſervatory by Capt. Cooke.

1777.	Facing the Eaſt.	Facing Weſt.	Means.	
	° ′	° ′	° ′	
June.	38 45	39 30	39 7	Mark end North.
	38 50	39 40	39 15	
	38 40	39 20	39 0	Mean 39° 1′ dip.
	39 40	38 15	38 57	
	39 50	38 20	39 5	Mark end South.
	39 15	38 15	38 45	

Equal Altitudes for the Going of the Clock and Watch N° 2.

1777.	Time per Clock at apparent Noon, uncorrect.	Half Interval of Obſervations.	Time of Noon per Clock correct.	Clock ſlow for Sidereal Time.	Daily Rate loſing.	No. of Obſervations	Phenomena and Remarks.
	H. ′ ″	H. ′ ″	H. ′ ″	′ ″	′ ″		
♄ June 14.	5 29 14,1	3 13 16	5 29 14,8	0 49,2	Loſing. 1 37,8	16	Sun.
♂ — 17.	5 36 48,4	3 22 7	5 36 49,1	5 42,5	1 38,2	12	Sun.
☿ — 18.	5 39 19,8	3 44 25	5 39 20,2	7 20 7	1 37,8	16	Sun.
♃ — 19.	5 41 51,6	3 37 50	5 41 51,9	8 58,5	1 38,5	14	Sun.
♀ — 20.	~~5 42 22,9~~	~~3 51 18~~	~~5 42 23,0~~	~~10 37,0~~	~~1 38,5~~	~~10~~	Sun.
♃ — 26.	5 59 28,0	3 31 24	5 59 27,8	20 28,1	1 39,3	16	Sun.
♀ — 27.	6 1 57,9	3 49 50	6 1 57,6	22 7,4	1 39,7	14	Sun.
♄ — 28.	6 4 28,0	3 49 18	6 4 26,8	23 47,1	1 38,7	10	Sun.
♂ July 1.	6 11 58,2	3 41 48	6 11 56,3	28 43,2		16	Sun.

♄ — 5. In the morning obſerved the following altitudes of the Sun's center.

Time per Clock	Zenith Diſtance of the Sun.
H. ′ ″	° ′
3 23 23,3	61 44
3 31 11,0	60 25
3 40 25,7	58 54

From theſe the Clock is computed to be 35′ 22″,6 too ſlow for ſidereal time at noon, and loſing 1′ 39″,8 per day.

Some Obſervations of the Eclipſe of the Sun at Tongotaboo, July 5th. By W. B.

The morning was very rainy with a ſtrong wind at S. by E. a little after 8 A. M. it ceaſed raining, and the clouds cleared away ſoon after, which enabled me to get the above altitudes of the Sun. It then came cloudy, and I ſaw the Sun no more till 6^h 8′ 16″, or 23^h 50′ 31″ per Clock mean time, when I perceived the eclipſe was begun. By obſerving the progreſs it made in half a minute of time, I ſuppoſe it begun about 15 or 18 ſeconds before I ſaw it; therefore I call the beginning 5^h 8′ 0″ or 23^h 50′ 16″,0 mean time.

Obſervations at Tongotaboo continued.

I then applied the object glaſs Micrometer to my Teleſcope, and made the following Obſervations. Theſe cannot be well depended on, the Sun being covered with thin clouds nearly all the time.

Time per Clock.	Mean Time.	Micrometer Diviſions.	Nonius.	Deg. Min. &c.	
H. ′ ″	H. ′ ″	′		° ′ ″	
6 26 11	0 8 23,8	2,5½	+ 9½	16 41 29,1	Diſtances of the horns of the uneclipſed part.
29 4	11 16,3	2,7½	+ 1	17 53 11,7	
30 20	12 32,2	2,8	+ 9	18 18 35,2	
31 38	13 40,0	2,9	+ 0¾	18 51 29,0	
34 2	16 13,5	3,0	+ 8	19 36 8,0	
36 33	18 44,1	3,1½	+ 0½	20 28 47,3	
6 41 55	0 24 5,2	3,4½	+ 16	22 37 51,0	Verſed ſines of the uneclipſed part.
43 47	25 56,9	3,2½	+ 13	21 56 31,2	
46 36	28 45,5	3,2½	+ 21	21 3 45,2	
48 22	30 31,2	3,2	+ 19	21 1 55,0	
50 21	32 29,9	3,1½	+ 5	20 32 17,7	
52 47	34 55,4	3,0½	+ 14	20 0 18,5	
54 3	36 11,2	3, 0	+ 15	19 41 35,2	
56 34	38 41,9	2,9	+ 14	19 1 48,5	

The Sun was obſcured with clouds during the remainder of the day.

The time of the beginning, taken as above, gives the longitude of Tongotaboo 184° 40′ Eaſt of Greenwich.

A Table for reducing the Micrometer Scale to Degrees, &c.

Inches.	Degrees and Minutes, &c.	Tenths of an Inch.	Degrees, Minutes, &c.
	° ′ ″		° ′ ″
1	6 29 58	,1	0 39 0
2	12 59 56	,2	1 17 59½
3	19 29 54	,3	1 56 59
4	25 59 52	,4	2 35 59
5	32 29 50	,5	3 14 59
6	38 59 48	,6	3 53 59
		,7	4 32 59
		,8	5 11 58
		,9	5 50 58
		,05	0 19 39
1/100 or one division of the Nonius.		—	0 0 46¾

The value of the Micrometer Scale was found thus:

I firſt made two rods, each five feet long, taken from the Micrometer Scale, with which 100 feet was exactly meaſured on a flat ſand (where the ſea flowed over at times) at each end of the line a pile was drove into the ſand, and a point made on the upper ſurface of each, ſo that the two points were 100 feet aſunder. Over one of theſe points the center of the object glaſs of the teleſcope was placed (by allowing for its thickneſs). Over the other point, on the pile, the ſurface of a board was placed at the ſame height with the center of the Teleſcope, at right angles to the line joining them. On this board was paſted a ſheet of paper, with ſtrong black lines drawn on it, exactly five inches aſunder. By ſeparating the glaſſes until theſe lines covered each other, I found a mean of 50 meaſures to be 2,2 inches + 1½ diviſions of the Nonius; theſe meaſures agreed within one diviſion of the Nonius or ¾ of a ſecond.

Obſervations at Tongotaboo continued.

By meaſuring a ſmall ſpace I found the error of the Micrometer Scale to be plus ¾ of one of the Nonius diviſions. Then ſay, as: 100 f.: 5 f.:: 206265″ ſeconds (equal to radius): 859½ ſeconds = 14′ 19″½ the value of 2,204 inches of the Micrometer Scale, from whence the above table was made by even proportion.

July 17, The Sun's diameter meaſured 4, 8 inches + 20 Nonius = 31′ 27″ 25″½ by the above table.

The Teleſcope uſed was an achromatic one of 3½ feet focus by Dollond. The beginning with a magnifying power of 150 times; but all the meaſures were made with a magnifying power of 90 times.

Computation of the Rate of the Going of the Watch N° 2.

1777.	Time per Watch at Compariſon.	Time per Clock at Compariſon.	Watch ſlow for Clock.	Watch loſes on Clock per Day.	Interval of Comparisons	Watch loſes on Clock in 24 h. of W.	Clock loſes on Sider. Time per Day.	Watch loſes on Sidereal Time.	Watch varies on Mean Time.
	H. ′	H. ′ ″	H. ′ ″	′ ″	H. ′	′ ″	′ ″	′ ″	″
♀ June 13.	11 10	5 48 21	19 37 21						
♄ — 14.	10 7	5 46 40½	39 40½	2 19½	23 56	2 19,88	1 37,76	3 57,64	—1,14
☉ — 15.	9 59	5 41 1	42 0	2 20½	23 52	2 21,26	1 37,76	3 59,02	—2,52
☽ — 16.	10 7	5 51 23	44 23	2 22	24 8	2 21,24	1 37,76	3 59,00	—2,50
♂ — 17.	9 53	5 39 43	46 43	2 20	23 46	2 21,34	1 37,76	3 59,10	—2,60
☿ — 18.	10 20	6 9 6	49 6	2 23	24 27	2 20,42	1 38,20	3 58,62	—2,12
♃ — 19.	11 32	7 23 31	51 31	2 25	25 12	2 18,10	1 37,84	3 55,94	+0,56
♀ — 20.	10 29	6 22 43	53 43	2 12	22 57	2 18,04	1 38,46	3 56,50	+0,00
♄ — 21.	9 55	5 50 56	55 56	2 13	23 26	2 16,25	1 38,51	3 54,76	+1,74
☉ — 22.	9 58	5 56 12	58 12	2 16	24 3	2 15,71	1 38,51	3 54,22	+2,28
☽ — 23.	9 57	5 57 29½	20 0 29½	2 17½	23 59	2 17,59	1 38,51	3 56,10	+0,40
♂ — 24.	10 3	6 5 47½	2 47½	2 18	24 6	2 17,42	1 38,51	3 55,93	+0,57
☿ — 25.	9 58	6 3 5	5 5	2 17½	23 55	2 17,98	1 38,51	3 55,49	+1,01
♃ — 26.	10 3	6 10 27	7 27	2 22	24 5	2 21,52	1 38,51	4 0,03	—3,53
♀ — 27.	9 58	6 7 43+	9 43+	2 16+	23 55	2 16,73	1 39,32	3 56,05	+0,45
♄ — 28.	10 0	6 11 59	11 59	2 16—	24 2	2 15,55	1 39,74	3 55,29	+1,21
☉ — 29.	9 58	6 12 14½	14 14½	2 15½	23 58	2 15,69	1 38,87	3 54,56	+1,94
☽ — 30.	10 5	6 21 31½	16 31½	2 17	24 7	2 16,33	1 38,87	3 55,20	+1,30
♂ July 1.	10 15	6 33 48½	18 48½	2 17	24 10	2 16,04	1 38,87	3 54,91	+1,59
☿ — 2.	10 2	6 23 1½	21 1½	2 13	23 47	2 14,23	1 39,50	3 53,73	+2,77
♃ — 3.	10 21	6 44 19½	23 19½	2 18	24 19	2 16,17	1 39,50	3 55,67	+0,83
♀ — 4.	11 40	8 5 43	25 43	2 23½	25 19	2 16,00	1 39,50	3 53,50	+1,00
♄ — 5.	11 3	7 30 57	27 57	2 14	23 23	2 17,54	1 39,50	3 57,04	—0,54

A mean of the whole gave 0″,129 per day, the Watch getting on mean time.
July 5th, At noon the Watch N° 2. 14ʰ was 10′ 3″,7 too ſlow for mean time at Tongotaboo.

Obſervations at Tongotaboo continued.

Obſervations of Meridian Zenith Diſtances for the Latitude.

1777.	Merid. Zenith Diſtances. ° ′ ″	Latitude South. ° ′ ″	Barom.	Ther. °	Mean. ° ′ ″	Phenomena and Remarks.
♀ June 13.	44 4 27,3	21 7 0	30,14	79	21 7 4½	S. The Sun.
☉ — 15.	44 10 27,0	21 7 1	30,11	80½		
☽ — 16.	44 12 55,3	21 7 3	30,15	76		
♀ — 27.	44 11 32,1	21 6 55	30,20	80		
♄ — 28.	44 9 0,0	21 7 0	30,11	80		
☉ — 29.	44 6 16,0	21 7 27	30, 9	80		
☽ — 30.	41 27 38	21 7 17	30,18	84	21 7 28	Arcturus.
♂ July 1.	41 28 10	21 7 49	30,25	88		Arcturus. These N. of the Zenith.
3.	41 27 40	21 7 19	30,16	73½		Arcturus.
1.	37 17 41	21 10 2	30,25	88	21 9 37	β Crucis.
1.	38 44 13	21 9 30	30,25	88		
3.	38 43 53		30,16	73½		α Centauris. S. of the Zenith.
3.	46 39 37	21 9 19	30,16	73½		γ Triangulum.

From the above the correction of the line of collimation is $+1' 4''$ and the true lat. $= 21° 8' 20''$ S.

1777.	Z. D. ☉'s U. L. obſerved. ° ′	Azimuths obſerved. ° ′	Variation ° ′	
♂ June 17.	78 54	N. 49 47 E.	9 50	Mean variation 10° 24′ Eaſt.
	73 51	67 3 W.	10 47	
☿ — 18.	82 13	51 0 E.	10 22	
	72 36	66 19 W	10 37	

Dip of the South Pole of the Needle obſerved on ſhore.

Mark End North. E.	Mark End North. W.	Mark End South. E.	Mark End South. W.	
40° 37′	38° 32′	41° 36′	38° 26′	Mean dip 39° 48′.

Lunar Obſervations.

1777.	Time by the Clock. H. ′ ″	Apparent Time. H. ′ ″	Diſtances obſerved. ° ′ ″	Alt. of ☉'s L.L. ° ′	Z. Diſt of ☽'s U. L. ° ′	Sextant uſed.	Error of Sextant. ′ ″	Baro.	Ther. °	Obſerv	Latitude ° ′ ″	Longitude deduced. ° ′ ″	Phenomena and Remarks.
♄ June 14.	8 1 32	2 33 17	102 28 17	31 47	69 31	D.	+1 30	30,14	76	B	21 8 20	184 34 37	☽ a ☉.
	8 8 59	2 40 43,3	102 32 28¾	30 37	67 52	R. 1	+1 45					185 18 45	Do.
☽ — 16.	11 58 42	6 23 44	64 49 6	46 34	32 36	D.	+1 30	30,15	72			184 46 0	☽ à Regulus.
	12 24 16	6 49 16	36 20 33	52 27	27 13	D.	+1 30					185 16 7½	☽ à Antares.
♀ — 27.	3 7 52	21 6 13	108 28 7½	61 6	61 43	D.	+0 30	30,20	79			175 16 45	☽ à ☉.
	3 17 33	21 15 53	108 20 38,5	59 30	64 1½	R. 1	+0 45					185 16 45	Do.
♄ — 28.	2 38 17	20 34 12	95 34 2	66 39	45 14	D.	+1 7	30,10	72			185 23 52	Do.
	2 46 4	20 41 58	95 28 21	65 1¾	46 57	R.	+1 15					185 26 15	Do.

A mean of all theſe is 185° 9′ 53″ E.

A mean of all the lunar obſervations made among the Friendly Iſlands gave the longitude of the obſervatory at Tongotaboo, when reduced to it by the Watch, — — — — — — — — — = 184° 47¾′ Eaſt.

Annamocka is 17 miles of longitude Eaſt of the obſervatory o′. in — — — — — — 185 4¾ Eaſt.

Obſervations made at Otaheite, on Point Venus.

Equal Altitudes of the Sun.

1777.	Time of Noon per Clock, uncorrect.	Half Interval.	Time of Noon per Clock, correct.	Clock ſlow for Sidereal Time.	Daily Rate of Clock.	No of Obſervations	Phenomena and Remarks.
	H. ′ ″	H. ′ ″	H. ′ ″	′ ″	′ ″		
☉ Aug. 31.	10 30 1,2	4 37 34	10 29 54,5	7 48,34	Loſing. 1 46,59	18	Sun.
♂ Sept. 2.	10 33 43,7	4 10 30	10 33 37,4	11 21,58	1 46,47	18	Sun.
♃ —— 4.	10 37 26,1	4 40 24	10 37 19,5	14 54,26	1 46,50	17	Sun.
♀ —— 5	10 39 16,2	4 14 36	10 39 9,9	16 40,76	1 46,54	16	Sun.
♄ —— 6.	10 41 6,6	3 56 30	10 41 0,1	18 27,30	1 46,20	10	Sun.
☽ —— 8.	10 44 47,3	3 42 2	10 44 41,9	21 59,78	1 46,9	14	Sun.
☿ —— 10.	11 18 26,00	4 39 48	11 18 19,5	Faſt. 4 26,40		12	Sun. { Set the hand of the Clock 30′ forward.
♄ —— 13.	11 23 56,50	4 46 6	11 23 50,0	Slow. 0 50,40	1 45,6	17	Sun.
♂ —— 16.	11 29 24,50	4 48 0	11 29 18,1	6 8,8	1 46,1	18	Sun.
♃ —— 18.	11 33 4,00	3 52 36	11 32 58,1	9 39,6	1 45,4	14	Sun.
♄ —— 20.	11 36 45,19	4 27 12	11 36 39,1	13 9,51	1 44,9	16	Sun.

Computation of the Going of the Watch N° 2.

1777.	Time per Clock at Compariſon.	Time per Watch at Compariſon.	Watch ſlow for Clock.	Clock gains on Watch.	Interval of Comparisons.	Clock gains on Watch in 24 hours.	Clock loſes on Sidereal Time.	Watch loſes on Sidereal Time.	Watch gets on Mean Time.
	H. ′ ″	H. ′	H. ′ ″	′ ″	H. ″	′ ″	′ ″	′ ″	″
♄ Aug. 29.	10 45 1	8 26	2 19 1						
☉ —— 30.	10 47 10	8 26	2 21 10	2 9,0	24 0	2 9,00	1 46,86	3 55,86	— 0,46
☽ —— 31.	10 50 9½	8 27	2 23 9½	1 59½	24 1	1 59,42	1 46,86	3 46,22	—10,28
♂ Sept. 1.	10 43 15½	8 18	2 25 15½	2 6	23 51	2 6,77	1 46,86	3 53,63	— 2,87
☿ —— 2.	10 49 23	8 22	2 27 23	2 7½	24 4	2 7,16	1 46,86	3 54,02	— 2,48
♃ —— 3.	10 45 29	8 16	2 29 29	2 6	23 54	2 6,51	1 46,56	3 53,07	— 3,43
♀ —— 4.	10 40 34	8 9	2 31 34	2 5	23 53	2 5,57	1 46,36	3 51,93	— 4,57
♄ —— 5.	10 47 40	8 14	2 32 40	2 6	24 5	2 5,57	1 46,50	3 53,07	— 4,43
☉ —— 6.	10 48 45¾	8 13	2 35 45¾	2 5¾	23 59	2 5,83	1 46,54	3 52,37	— 4,13
☽ —— 7.	10 49 50	8 12	2 37 50	2 4¾	23 59	2 4,33	1 46,47	3 50,80	— 5,70
♂ —— 8.	10 54 57	8 15	2 39 57	2 7	24 3	2 6,77	1 46,55	3 53,32	— 3,18
☿ —— 9.	10 52 3	8 10	2 42 3	2 6	23 55	2 6,43	1 46,62	3 53,05	— 3,45
♃ —— 10.	11 25 7	8 11	3 14 7	32 4	24 1	2 3,92	1 46,62	3 50,54	— 5,96
♀ —— 11.	11 29 12½	8 13	3 16 12½	2 5½	24 2	2 5,33	1 46,31	3 51,64	— 4,84
♄ —— 12.	11 25 19	8 7	3 18 19	2 6½	23 54	2 7,10	1 45,72	3 52,82	— 3,68
☉ —— 13.	11 28 27	8 8	3 20 27	2 8	24 1	2 7,92	1 45,60	3 53,52	— 2,98
☽ —— 14.	13 35 46	10 13	3 22 46	2 19	24 5	2 19,17	1 45,60	4 4,77	+ 8,27
♂ —— 15.	11 32 42	8 8	3 24 42	1 56	21 55	2 6,84	1 46,13	3 52,97	— 3,53
☿ —— 16.	11 37 50	8 11	3 26 50	2 8	24 3	2 7,77	1 45,72	3 53 49	— 3,01
♃ —— 17.	11 33 58	8 5	3 28 58	2 8	23 54	2 8,51	1 45,41	3 53 92	— 2,08
♀ —— 18.	11 57 8	8 26	3 31 8	2 10	24 21	2 8,19	1 45,15	3 53,33	— 3,17
♄ —— 19.	11 41 14	8 8	3 33 14	2 6	23 42	2 7,53	1 44,94	3 52,47	— 4,03
☉ —— 20.	11 53 23	8 18	3 35 23	2 9	24 10	2 8,14	1 44,64	3 52,78	— 3,72

Mean rate of the Watch =3″359 getting on mean time—The 20th at noon it was 15 52′ 2″,7 too ſlow for mean time at Otaheite.

Obſervations at Otaheite continued.

Lunar Obſervations made on Point Venus.

1777.	Time per Clock.	Apparent Time.	Diſtances obſerved.	Alt. of ☉ and Stars ☉ L. L.	Z. Diſt. of the Moon's U. L.	Sextant uſed.	Error of Sextant.	Barom.	Therm.	Obſerver.	Latitude in.	Longitude deduced.	Phenomena and Remarks.
	H. ′ ″	H. ′ ″	° ′ ″	° ′	° ′		′ ″		°		° ′ ″	° ′ ″	
☽ Sept. 7.	9 42 56	23 0 9,8	54 54 25	61 53	66 9	D.	+0 0	30,07	82	B	17 29 16	210 30 30 E.	☽ à Sun.
	9 56 31	23 13 45	55 2 53	63 54	63 14	R. 1	−2 25					210 23 30	Do.
♂ — 8.	10 46 16	0 1 35	66 10 31	66 28	61 1	D.	+0 45	30,05	84			210 27 15	Do.
	11 4 35	0 19 53	66 19 21	65 57	56 36	R. 1	−1 45					210 38 45	Do.
♂ — 9.	11 55 21	1 8 45	77 33 11	61 18	55 21	D.	−1 52	30,15	8[illegible]			210 52 45	Do.
	12 6 9	1 19 32½	77 34 59	59 36	52 47	R. 1	0 0					210 12 45	Do.
	18 4 18	7 17 13	56 9 42	31 10	59 20	D.	−2 52					210 32 45	☽ à α Aquilæ.
☿ — 10.	13 25 21	2 11 52	88 58 5	51 14	52 28	R. 1	−0 0	30,20	89			210 54 15	☽ à Sun.
	13 32 53	2 19 23,3	[illegible] 2 30	49 45	50 46	D.	−1 47					210 53 15	Do.
♀ — 12.	20 32 48	9 10 1,6	37 39 52	30 22	68 2	R. 1	0 0	30,17	77			210 28 45	☽ à Antares.
☉ — 14.	18 45 18	7 19 7	63 27 27½	53 56	29 24	R. 1	0 0					210 21 0	Do.
	A mean of all theſe is = 210° 34′ 8″ Eaſt.												
15.	Immerſion of a ſmall ſtar behind the Moon's dark limb at 1h 22′ 12″½, or 13h 53′ 44″,6 apparent time, — — — — — — — — — — —												29th in Capricorn per Flamſted.

Obſervations for the Latitude.

1777.	Obſerved Zen. Diſtance ☉'s U. L.	Latitude.	Barom.	Therm.	Phenomena and Remarks
	° ′ ″	H. ′ ″		°	
♀ Aug. 29.	26 34 46	17 28 37	30,18	88	Sun.
☿ Sept. 3.	24 46 28	28 1	30,18	84½	Sun.
♀ — 5.	24 2 16	28 12	30,21	85	Sun.
♄ — 6.	23 40 14	28 32	30,19	88	Sun.
☉ — 7.	23 17 20	28 9	30,08	83½	Sun. } Mean 17° 28′ 15″½ South.
♂ — 9.	22 32 21	28 22	30,15	88½	Sun.
☿ — 10.	22 9 25	28 10	30,20	90	Sun.
♄ — 11.	21 46 30	28 9	30,20	89	Sun.
♃ — 13.	21 0 37	28 6	30,20	88	Sun.
♂ — 16.	19 51 27	28 17	30,20	88	Sun.
	Stars obſerved to the North of the Zenith.				
4, 5, 6.	39 52 22	17 28 55	30,17	77	α Arietis. } Mean 17° 28′ 54″ South.
	33 30 42	28 43			Aldebaran.
	63 11 33	28 35			Capella.
	27 33 42	28 51			γ Aquilæ.
	25 46 25	29 2			α Aquilæ.
	23 21 10	29 21			β Aquilæ.

Obſervations at Otaheite continued.

Obſervations for the Latitude continued.

Stars obſerved to the South of the Zenith.

1777.	Obſerved Zen. Diſtance ☉'s U. L.	Latitude.	Barom.	Therm.	Phenomena and Remarks.	
	° ′ ″	° ′ ″				
Auguſt.	60 58 23	17 30 54	30, 17	73	β Hydra.	From whence the line of collimation is erroneous 32 ſeconds.
	30 24 30	30 36			β Phœnix.	
6, 7, 8.	40 50 30	30 52			α Eridani.	
	45 8 3	30 20			α Hydræ.	
	49 11 43	29 16			δ Paon.	Mean 17° 19′ 58″ South.
	39 54 27	29 23			α Paon.	
	30 32 10	29 15			α De. l. Indian.	
	49 27 38	29 9			β Paon.	
	48 49 34	29 5			γ Paon.	

A mean of the whole 17° 29′ 6″ the true Latitude South.

Dip of the South End of the Needle.

Mark End North.		Mark End South, or Poles changed.		
E.	W.	E.	W.	
° ′	° ′	° ′	° ′	
31 45	28 16	29 36	29 48	Mean 29° 49′¾ with the plain Needle.
29 8	28 40	30 26	30 46	Mean 29 45′ with the balanced Needle.

Azimuths taken on Point Venus.

1777.	Zen Diſt. ☉. U.L.	Azimuth. obſerved.	Variation.	Phenomena and Remarks.	
	° ′	° ′	° ′		
♂ Sept. 2.	71 32	N. 81 2 W.	5 57 E.	Sun.	A mean of theſe 5° 44′ 24″ Eaſt variation.
♃ —— 4.	76 36	72 22 E.	5 30	Sun.	
	75 54	83 55 W.	6 7	Sun.	
♄ —— 6.	70 48	82 27	5 21	Sun.	
♂ —— 9.	80 31	75 42 E.	5 47	Sun.	

During my reſidence at Otaheite, I made daily obſervations on the tides with my inſtrument placed at the Rock (C). September firſt (the day of the change) it was high water at noon nearly; the water roſe 12,2 inches perpendicular that day; but the ſecond it roſe 14,5 inches, which was the greateſt riſe during my ſtay.

The time of high water did not exceed 3 hours from noon, at any time; the day and night tides were nearly the ſame as to quantity and time both.

Obſervations at Otaheite continued.

Obſervations made at Otaheite by Captain Cooke and Lieutenant King.

Equal Altitudes of the Sun.

1777.	Time of Noon per Clock, uncorrect.	Half Interval.	Time of Noon per Clock, correct.	Clock ſlow for for Sidereal Time.	Daily Rate of Clock.	N° of Obſervations.	Phenomena and Remarks.
	H. ′ ″	H. ′ ″	H. ′ ″	′ ″	′ ″		
☉ Aug. 31.	10 30 13,4	4 25 4	0 30 6,7	7 36,7	Loſing. 1 45,55	30	Sun.
♂ Sept. 2.	10 33 57,7	4 18 5	10 33 51,0	11 7,8	1 45,76	24	Sun.
☿ —— 3.	10 35 49,4	4 14 49	10 35 42,9	12 53,6	1 47,46	17	Sun.
♃ —— 4.	10 37 39,3	4 33 52	10 37 32,8	14 41,0	1 46,15	16	Sun.
♀ —— 5.	10 39 30,2	4 5 20	10 39 23,8	16 27,2	1 45,80	22	Sun.
♄ —— 6.	10 41 21,2	4 0 6	10 41 14,8	18 13,0	1 46,29	18	Sun.
☽ —— 8.	10 45 1,8	3 46 1	10 44 55,2	21 45,6		17	Sun.

Mr. King remarks, that, during the above the Index at the bottom of the pendulum ſtood at 28 or (0). On the 9th the Clock was ſtopped, and the index placed at N° 2. when the mark on the braſs was exactly at the top of the bob, the ſame as when going at Greenwich.

The Clock was alſo ſet nearer to ſidereal time.

☿ —— 10.	11 18 42,8	4 35 54	11 18 36,2	Clock faſt. 4 43,17	1 43,72	14	Sun.
♄ —— 13.	11 24 19,0	4 53 48	11 24 12,4	Clock ſlow. 0 27,98	1 44,35	22	Sun.
☉ —— 14.	11 26 10,1	4 50 12	11 26 3,6	2 12,33	1 44,26	12	Sun.
♂ —— 16.	11 29 52,6	4 57 40	11 29 46,0	5 40,86	1 44,10	18	Sun.
♀ —— 19.	11 35 26,1	3 53 14	11 35 20,2	10 52,91	1 43,70	12	Sun.
♄ —— 20.	11 37 18,1	4 30 4	11 37 12,0	12 36,61		10	Sun.

Computation of the Rate of the Watch N° 1.

1777.	Time of Compariſon per N° 1.	Mean Time of Compariſon.	N° 1. ſlow for Mean Time.	Daily Rate, loſing.
	H. ′ ″	H. ′ ″	H. ′ ″	″
☉ Aug. 31.	9 58 43½	24 17 58,4	14 19 15,0	
☽ Sept. 1.	9 50 32¼	24 9 48,3	14 19 16,1	1,10
♂ —— 2.	9 42 20¾	24 1 38,2	14 19 17,4	1,37
☿ —— 3.	9 47 8	24 6 26,7	14 19 18,7	1,30
♃ —— 4.	9 38 57	23 58 18,3	14 19 21,3	2,57
♀ —— 5.	9 39 44½	23 59 7,9	14 19 23,4	2,06
♃ —— 6.	9 47 32¾	24 6 56,4	14 19 23,7	0,32
☉ —— 7.	9 40 21½	23 59 46,6	14 19 25,1	1,43
☽ —— 8.	9 41 10	24 0 36,6	14 19 26,6	1,47
♂ —— 9.	9 44 57¾	24 4 25,7	14 19 28,2	1,63
☿ —— 10	9 57 44¼	24 17 13,3	14 19 29,0	0,84
♃ —— 11.	9 42 31	24 2 2,2	14 19 31,2	2,14
♀ —— 12.	9 40 16¼	23 59 49,9	14 19 33,7	2,48
				1,85

Obſervations at Otaheite continued.

Computation of the Rate of the Watch N° 1. continued.

1777.	Time of Comparison, per N° 1.	Mean Time of Comparison.	N° 1. ſlow for Mean Time.	Daily Rate of Watch, loſing.	Phenomena and Remarks.
	H. ′ ″	H. ′ ″	H. ′ ″	″	
♄ Sept. 13.	9 31 1	23 58 36,5	14 19 35,5		
☉ —— 14.	9 37 17½	23 57 24,4	14 19 37,0	1,46	
☽ —— 15.	9 39 33	23 59 11,9	14 19 38,92	1,94	
♂ —— 16.	9 41 19	24 0 59,5	14 19 40,5	1,60	From theſe compariſons, the daily rate of the Watch N° 1. is loſing 1″,54 on mean time.
☿ —— 17.	9 36 4¾	23 55 47,6	14 19 42,8	2,33	
♃ —— 18.	9 58 49	24 18 33,2	14 19 44,2	1,33	
♀ —— 19.	9 42 37	24 2 21,8	14 19 44,8	0,73	
♄ —— 20.	9 43 23¾	24 3 8,9	14 19 45,6	0,85	

Lunar Obſervations made at Otaheite by Captain Cooke and Lieutenant King.

1777.	Time per Clock N° 1.	Apparent Time.	Diſtances obſerved.	Alt. of ☉ & ✱s. ☉'s L. L.	Z. Diſt. of ☽'s U. L.	Sextant uſed.	Error of Sextant.	Barom.	Therm.	Obſervers	Latitude in.	Longitude deduced.	Phenomena and Remarks.
	H. ′ ″	H. ′ ″	° ′ ″	° ′	° ′		′ ″		°		° ′ ″	° ′ ″	
♄ —— 6.	9 28 10	10 45 9	54 50 55	59 45	69 38	R. 4	—0 55	30,20	79	C	17 29 6	210 26 15	☽ à Sun.
	9 28 10	10 45 9	54 50 42	59 45	69 38	R. 1	—1 15			K		210 43 40	Do.
	9 36 13	10 53 12	54 54 17	60 55	67 46	R. 1	—1 15			C		210 34 30	Do.
	9 36 13	10 53 12	54 54 38	60 55	67 46	R. 4	—0 55			K		210 13 0	Do.
	9 52 14	11 9 32	54 56 15	63 2	64 2	R. 2	+2 25			C		211 4 16	Do.
	9 52 14	11 9 32	54 38 15	63 2	64 2	D.	+0 45			K		210 41 56	Do.
	9 59 21	11 16 18	55 0 50	63 50	62 23	D.	+0 45			C		210 42 45	Do.
	9 59 21	11 16 18	54 58 35	63 50	62 23	R. 2	+2 20			K		211 10 40	Do.
	10 14 20	11 31 16	55 6 16	65 11	57 26	B.	+0 15			C		211 12 45	Do.
	10 14 20	11 31 16	55 9 12	65 11	57 26	R. 1	—1 45			K		210 42 0	Do.
	10 20 43	11 37 38	55 11 40	65 36	57 22	R. 1	—1 45			C		210 36 0	Do.
	10 20 43	11 37 38	55 8 22	65 36	57 22	B.	+0 15			K		211 10 15	Do.
☽ —— 8.	10 59 31	0 14 35	66 18 12	66 8	57 58	R. 4	—1 15	30,08	80	C		210 2 0	Do.
	10 59 31	0 14 35	66 17 50	66 8	57 58	R. 1	—1 50			K		210 34 15	Do.
	11 8 24	0 23 27	66 21 12	65 44	55 56	R. 1	—1 50			C		210 25 45	Do.
	11 8 24	0 23 27	66 22 2	65 44	55 56	R. 4	—1 25			K		209 50 30	Do.
	11 27 56	0 41 40	66 24 2	64 14	50 53	D.	+1 40			C		210 19 30	Do.
	11 27 56	0 41 40	66 23 0	64 14	50 53	R. 2	+2 15			K		210 34 36	Do.
	11 33 34	0 48 36	66 25 25	63 39	50 6	R. 2	+2 15			C		210 36 45	Do.
	11 33 34	0 48 36	66 25 35	63 39	50 6	D.	+1 40			K		210 50 45	Do.
	11 53 47	1 8 46	66 33 27	62 2	45 29½	B.	+0 30			C		211 7 45	Do.
	11 53 47	1 8 46	66 37 2	62 2	45 29½	R. 1	—1 50			K		210 25 45	Do.
	12 0 8	1 14 57	66 38 52	61 6	43 53	R. 1	—0 50			C		210 21 15	Do.
	12 0 8	1 14 57	66 34 50	61 6	43 53	B.	+1 30			K		211 12 30	Do.
♂ —— 9.	11 15 4	0 29 7	77 17 40	65 55	64 33	R. 4	—2 0	30,05	75	C		211 17 30	Do.
	11 15 4	0 29 7	77 18 40	65 55	64 33	R. 2	—2 0			K		210 47 45	Do.
	11 21 1	0 34 23	77 20 48	65 26	63 12	R. 2	—2 0			C		210 37 40	Do.
	11 21 1	0 34 23	77 20 37	65 26	63 12	R. 4	—2 0			K		210 39 0	Do.
	11 38 14	0 51 35	77 23 57	62 40	59 16	B.	+0 45			C		210 58 35	Do.
	11 38 14	0 51 35	77 24 0	62 40	59 16	R. 2	+1 25			K		210 17 30	Do.
	11 44 48	0 58 9	77 26 41	62 49	57 45	R. 2	+1 25			C		210 14 25	Do.
	11 44 48	0 58 9	77 26 20	62 49	57 45	B.	+0 45			K		210 59 15	Do.
	0 1 22	1 14 43	77 33 28	60 28	53 56	R. 2	+1 65			C		210 43 30	Do.
	0 1 22	1 14 43	77 32 45	60 28	53 56	D.	+1 30			K		210 20 15	Do.
	0 9 22	1 22 43	77 35 10	59 12	52 6	D.	+1 34			C		210 33 30	Do.
	0 9 22	1 22 43	77 35 17½	59 12	52 6	R. 2	+1 55			K		210 21 30	Do.
☿ —— 10.	1 7 9	1 48 36	88 53 0	54 53	56 40	∴ 1	—2 0	30,15	7[illegible]	K		210 32 30	Do.
	1 22 11	2 3 27	88 54 20	51 58	53 15	R. 2	+2 50			K		210 34 15	Do.
	1 55 41	2 36 55	89 7 5	45 10	45 36	B.	—1 0			K		211 2 45	Do.
	2 9 25	2 50 37	89 10 17	42 29	42 28	D.	+1 0			K		210 41 45	Do.
	2 17 34	2 58 46	89 16 42	40 19	40 36	R. 4	—2 0			K		210 16 15	Do.
☉ —— 14.	6 45 42	7 19 44	63 27 26	53 56	29 22	D.	+1 0	30,1[illegible]	[illegible]	C		210 22 30	☽ à Antares.
	6 45 42	7 19 44	63 30 55	53 56	29 22	R. 1	—2 0			K		210 18 20	

Obſervations at Otaheite continued.

Lunar Obſervations made on board the Reſolution, at Anchor in Matavai Bay, by Captain Cooke and Lieutenant King.

1777.	Time per Watch N° 1.	Apparent Time.	Diſtance obſerved.	Alt. of ☉ & ✱'s ☉'s L.L.	Z. Diſt. of ☽'s U. L.	Sextant uſed.	Error of Sextant.	Barom.	Therm.	Obſerver.	Latitude in.	Longitude deduced.	Phenomena and Remarks.
	H. ′ ″	H. ′ ″	° ′ ″	° ′	° ′		′ ″		°		° ′ ″	° ′ ″	
☽ Sept. 22.	4 43 54	19 11 20	106 1 25	17 0	38 53	R. 1	−2 25	30,17	75	C	17 29 6	210 52 0	☽ a Sun.
	4 49 46	19 17 12	105 55 7	18 25	37 59	R. 3	+1 10			C		210 33 30	Do.
	5 2 56	19 30 22	105 52 20	21 32	35 41	R. 4	−1 15			C		210 10 25	Do.
	5 14 9	19 41 35	105 46 12	23 51	35 44	R. 2	+2 25			C		210 52 45	Do.
♂ — 23.	6 3 11	20 31 1	92 30 10	35 54	33 49	R. 1	−2 25	30,16	76	C		210 37 15	Do.
	6 8 17	20 36 7	92 23 57	37 3	32 57	R. 3	+0 46			C		210 5 0	Do.
	6 26 37	20 54 27	92 17 30	41 20	29 44	R. 2	+2 25			C		210 47 0	Do.
	6 39 42	21 7 32	92 15 55	44 19	28 14	R. 4	−1 32			C		210 35 30	Do.
☿ — 24.	7 27 24	21 55 28	79 14 2	55 12	28 45	B.	+0 37			C		210 1 0	Do.
	7 27 24	21 55 28	79 17 17	55 12	28 45	R. 1	−2 20	30,10	80	K		210 10 10	Do.
	7 31 53	22 0 6	79 16 7	56 9	27 57	R. 1	−2 20			C		210 27 25	Do.
	7 31 53	22 0 6	79 12 2	56 9	27 57	B.	+0 37			K		209 52 0	Do.
	7 54 16	22 22 29	79 6 15	60 47	23 53	R. 4	−1 45			C		210 7 30	Do.
	7 54 16	22 22 29	79 3 57	60 47	23 53	D.	0 0			K		209 56 0	Do.
	8 43 30	23 12 43	78 42 19	69 41	14 12	D.	0 0			C		209 58 45	Do.
	8 43 30	23 12 43	78 44 2	69 41	14 12	R. 4	−1 45			K		210 6 27	Do.
	8 50 31	23 18 23	78 38 35	70 28	12 58	R. 3	+1 0			C		210 3 45	Do.
	8 50 31	23 18 23	78 28 2	70 28	12 58	R. 2	+2 0			K		210 19 30	Do.
	8 53 52	23 22 5	78 36 25	70 53	12 18	R. 2	+2 0			C		210 17 45	Do.
	8 53 52	23 22 5	78 37 2	70 53	12 18	R. 3	+1 0			K		210 5 55	Do.
♃ — 25.	6 58 14	21 26 49	67 4 32	49 0	42 30	R. 4	−1 20	30,12	10	C		210 41 0	Do.
	6 58 14	21 26 49	67 5 12	49 0	42 30	R. 1	−2 15			K		210 34 5	Do.
	7 1 48	21 30 23	67 4 35	49 49	42 2	R. 1	−2 15			C		210 47 30	Do.
	7 1 48	21 30 23	67 3 27	49 49	42 2	R. 4	−1 20			K		210 41 50	Do.
	7 14 33	21 43 8	66 56 45	52 39	40 17	D.	0 0			C		210 2 15	Do.
	7 14 33	21 23 8	66 55 37	52 39	40 17	R. 2	+2 0			K		210 26 0	Do.
	7 18 9	21 46 44	66 54 47	53 27	29 45	R. 2	+2 0			C		210 37 0	Do.
	7 18 9	21 46 44	66 55 10	53 27	29 45	D.	0 0			K		209 54 0	Do.
	7 36 43	22 5 18	66 48 37	57 28	36 58	B.	+0 30			C		209 55 30	Do.
	7 36 43	22 5 18	66 49 57	57 28	36 58	R. 3	+0 35			K		210 28 15	Do.
	7 42 21	22 10 56	66 48 30	58 40	36 5	R. 3	+0 35			C		210 29 45	Do.
	7 42 21	22 10 56	66 46 50	58 40	36 5	B.	+0 30			K		209 48 15	Do.

A mean of the above 75 ſets gave the longitude = 210° 29′ 8″½ Eaſt.

Azimuths obſerved at Matavai Bay by Captain Cooke.

1777.	Altitude of the Sun.	Azimuth of the Sun.	Maker of the Compaſſes.		Variation deduced.	Mean by each.	Phenomena and Remarks.
	° ′	° ′			° ′ ″	° ′ ″	
♄ Sept. 6.	18 53	N 82 33 W	Gregory N° 1.		6 0 0	5 53 0	Mean 5° 34′ 17″ Eaſt.
	18 18	82 33		½ round	5 46 0		
	17 11	83 0	Do. N° 2.		5 46 20	5 52 30	
	14 29	83 56		½ round	5 58 50		
	10 50	84 58	Knight N° 2.		5 20 40	5 11 20	
	9 25	85 10		½ round	5 2 0		
	8 45	84 45	Do. N° 3.		4 23 20	4 22 40	
	7 44	85 5		½ round	4 22 0		
	6 37	86 20	Do. N° 4.		5 14 0	5 32 50	
	5 27	87 21		½ round	5 51 40		
	4 43	87 51	Martin.		6 6 40	6 33 20	
	4 19	88 23		½ round	6 30 0		

Obſervations at Otaheite continued.

Azimuths obſerved by Captain Cooke.

1777.	Zen. Diſt. of the Sun's U. L.	Azimuths from the North.	Names of the Makers of the Compaſſes.		Variation deduced.	Mean Variation.	Phenomena and Remarks.
	° ′	° ′			° ′ ″	° ′ ″	
♄ Sept. 6.	82 53	N 75 33 E	Gregory N° 1.	½ round	5 43 40	5 53 50	5° 33′ 55″ Variation E.
	81 50	74 56			6 4 0		
	81 12	75 15	Do. N° 2.	½ round	5 32 40	5 21 0	
	80 21	75 20			5 9 20		
	78 52	74 43	Knight N° 2.	½ round	5 15 20	5 27 0	
	78 25	74 20			5 33 40		
	77 46	74 17	Do. N° 3.	½ round	5 18 0	5 25 0	
	77 20	73 53			5 32 0		
	76 38	73 21	Do. N° 4.	½ round	5 48 20	5 27 20	
	76 12	73 55			5 6 20		
	75 17	73 3	Martin.	½ round	5 36 40	5 49 20	
	74 55	72 30			6 2 0		
♂ —— 9.	Z. D. ☉'s L. L.						
	81 24	N 76 8 E	Gregory N° 1.	½ round	5 42 0	5 55 40	5° 41′ 36″ Variation E.
	81 6	75 35			6 9 20		
	80 32	75 47	Do. N° 2.	½ round	5 45 40	5 36 12	
	80 2	75 55			5 26 45		
	78 57	75 48	Knight N° 1.	½ round	5 10 40	5 24 0	
	78 38	75 15			5 37 20		
	78 5	75 27	Do. N° 4.	½ round	5 12 0	5 19 30	
	77 44	75 8			5 25 0		
	76 59	73 58	Martin.	½ round	5 19 40	6 12 40	
	76 8	73 57			6 5 40		
♄ —— 13.	Altitude L. L.						
	23 58	N 84 3 W	Gregory N° 1.	½ round	6 31 40	6 32 20	5° 56′ 4″ Variation E.
	21 52	84 27			6 33 0		
	17 8	86 0	Do. N° 2.	½ round	5 46 0	5 50 20	
	16 51	86 15			5 54 40		
	15 41	86 3	Knight N° 1.	½ round	5 17 0	5 13 30	
	14 48	85 58			5 10 0		
	13 44	86 38	Do. N° 4.	½ round	5 17 0	5 39 30	
	13 12	87 42			6 0 2		
	12 38	88 18	Martin.	½ round	6 23 20	6 24 40	
	12 3	88 30			6 26 0		

A mean of all the above Variations = 5° 41′ 28″ Eaſt.

Obſervations at Otaheite continued.

Dips of the Magnetic Needle obſerved by Captain Cooke.

E. ° ′	W. ° ′		Mean.	
29 23½	28 58½	Mark end North	29 3 20	Theſe obſerved with the balanced Needle.
28 8⅓	29 43⅓	Mark end South		
27 20	27 50	Mark end North	29 21 52½	Thoſe with the plain Needle.
30 50	31 27½	Mark end South		

Obſervations made at Huaheine by Capt. Cooke and Lieut. King.

Equal Altitudes of the Sun.

1777.	Time of Noon per Clock uncorrect.	Half Interval of Obſervations.	Time of Noon per Clock, correct.	Clock too ſlow for Sidereal Time.	Daily Rate of Clock.	N° of Obſervations.	Phenomena and Remarks.
	H. ′ ″	H. ′ ″	H. ′ ″	′ ″	′ ″		
♄ Oct. 18.	13 14 15,0	4 17 52	13 14 11,07	17 55,86	Loſing.	19	Sun.
♂ —— 21.	13 19 51,9	4 57 12	13 19 47,53	23 38,01	1 54,05	16	Sun.
☿ —— 22.	13 21 44,3	5 8 29	13 21 39,65	25 33,44	1 55,43	7	Sun.
♃ —— 23.	13 23 37,3	5 45 24	13 23 32,05	27 29,27	1 55,83	9	Sun.
	Captain Cooke remarks, that finding the above rate to differ more than it ought from its rate at Otaheite, he ſtopped the Clock, and examined the bob of the pendulum, but could not perceive any alteration; the index remaining at N° 2. he put it forward about 40 minutes, and ſet it going again.						
				Faſt.			
♀ —— 24.	14 5 27,4	5 18 9	14 5 22,4	10 32,14	1 55,06	12	Sun.
☽ —— 27.	14 11 12,1	4 11 46	14 11 8,9	4 46,95	1 55,45	20	Sun.
♂ —— 28.	14 13 8,5	4 6 38	14 13 5,5	2 51,50		9	Sun.

Computation of the Rate of the Watch N° 1.

1777.	Time per Watch at Compariſon.	Mean Time of Compariſon.	Watch ſlow for Mean Time.	Daily Rate of the Watch.	Phenomena and Remarks.
	H. ′ ″	H. ′ ″	H. ′ ″	″	
♀ Oct. 17.	9 57 30	24 12 5,79	14 14 35,79	Loſing. 3,65	
♄ —— 18.	42 25½	23 57 4,90	14 14 39,40	2,86	
☉ —— 19.	33 21	23 48 3,24	14 14 42,24	2,06	
☽ —— 20.	44 15½	23 58 59,91	14 14 44,31	1,85	
♂ —— 21.	36 12	23 50 58,15	14 14 46,15	2,37	
♀ —— 22.	30 9	23 44 37,51	14 14 48,51	2,12	By a mean of theſe the Watch is loſing 2″, 3 per day on mean time.
♃ —— 23.	26 6½	23 40 57,12	14 14 50,62	0,43	
♀ —— 24.	39 7	23 53 58,05	14 14 51,05	2,12	
♄ —— 25.	31 4	23 45 57,16	14 14 53,16	2,71	
☉ —— 26.	31 59¾	23 46 55,62	14 14 55,87	1,61	
☽ —— 27.	33 56¼	23 48 53,73	14 14 57,48	3,52	
♂ —— 28.	47 50¼	24 2 51,29	14 15 1,04		

Obſervations at Huaheine continued.

Lunar Obſervations at Huaheine by Captain Cooke and Lieutenant King.

1777.	Time per Clock.	Apparent Time.	Diſtance obſerved.	Z. D. of Sun & Stars ☉ U. L.	Z. D. of ☽'s U. L.	Sextant uſed.	Error of Sextant.	Barom.	Therm.	Obſervers	Latitude in.	Longitude deduced.	Phenomena and Remarks.
	H. ′ ″	H. ′ ″	° ′ ″	° ′	° ′		′ ″		°		° ′ ″	° ′ ″	
♂ Oct. 21.	10 1 41	20 40 37	110 24 42½	48 15	20 33	D.	+0 15	30,15	76	K	16 42 49 S.	208 7 15	☽ a Sun.
	10 13 47	20 52 23	110 23 20	44 59	18 25	R. 1	—2 15			K		208 40 0	Do.
	10 24 14	20 59 52	110 15 55	43 43	16 54	R. 2	+2 10			K		208 52 15	Do.
	10 28 45	21 7 24	110 12 47	41 55	15 23	B.	0 0			K		208 14 15	Do.
☿ —22.	9 36 2	20 12 45	97 53 50	54 44	36 8	R. 1	—2 10	30,15	77	K		208 47 15	Do.
	9 46 33	20 23 14	97 46 17	52 22	34 25	D.	+0 25			K		208 36 45	Do.
	9 58 23	20 35 3	97 42 20	49 32	32 26	R. 2	+2 10			K		208 8 45	Do.
	10 8 47	20 45 26	97 38 42	47 2	30 36	B.	+0 15			K		208 18 30	Do.
♃ —23.	11 5 21	21 0 8	85 11 3	43 25	38 36	B.	+0 30	30,14	75	C		208 8 53	Do.
	11 5 21	21 0 8	85 15 49	43 25	38 36	R. 1	—2 30			K		208 53 53	Do.
	11 10 1	21 4 54	85 14 47	42 20	37 55	R. 1	—2 30			C		209 5 30	Do.
	11 10 1	21 4 54	85 9 30	42 20	37 55	B.	+0 30			K		208 0 0	Do.
	11 22 18	21 17 12	85 7 10	39 24	35 49	R. 2	+2 0			C		209 39 0	Do.
	11 22 18	21 17 12	85 6 37	39 24	35 49	D.	+0 25			K		208 35 0	Do.
	11 26 15	21 21 9	85 4 56	38 28	35 9	D.	+0 25			C		208 28 15	Do.
	11 26 15	21 21 9	85 6 37	38 28	35 9	R. 2	+2 0			K		209 3 30	Do.
♀ —24.	13 16 49	23 1 36	72 27 50	13 17	26 2	D.	+0 20	30,17	74	C		208 44 15	Do.
	13 16 49	23 1 36	72 30 52	13 17	26 2	R. 1	—2 35			K		208 45 30	Do.
	13 24 57	23 17 22	72 28 30	11 26½	24 23	R. 1	—2 35			C		209 2 30	Do.
	13 24 57	23 17 22	72 24 7	11 26½	24 23	D.	+0 20			K		208 13 15	Do.

Azimuths obſerved by Captain Cooke and Lieutenant King.

1777.	Altitudes of the Sun.	Azimuths obſerved.	Compaſs Maker.		Variation deduced.	Mean.	Phenomena and Remarks.
	° ′	° ′			° ′ ″	° ′ ″	
♂ Oct. 21.	21 0	N 78 40 W	Greg.		6 0 0	5 53 52	4° 53′ 17″ Eaſt.
	20 1	78 46		½ round	5 47 45		
	18 4	80 7	Knight N° 2.		3 44 30	3 52 7	
	17 2	79 36		½ round	3 59 45		
	13 57	76 51	Martin.		5 54 45	5 57 7	
	13 3	76 32		½ round	5 59 30		
	The above were obſerved on board the ſhip at anchor.						
	The following were obſerved on ſhore.						
♃ — 23.	Z. D. ☉'s U. L.						
	73 33	S 87 39⅓ E	Gregory N° 1.		5 20 20	5 20 0	5° 16′ 44″ Eaſt.
	73 12⅔	87 53		½ round	5 19 40		
	72 27⅔	87 50	Do. N° 2.		5 13 40	5 9 30	
	72 3	87 48⅓		½ round	5 6 0		
	70 46⅓	87 55	Knight N° 2.		4 52 20	4 50 10	
	70 23	87 56⅔		½ round	4 48 0		
	69 43⅓	88 48⅓	Do. N° 3.		5 29 0	5 35 40	
	69 22⅓	89 6⅔		½ round	5 42 20		
	69 47	88 33⅓	Do. N° 4.		5 0 0	5 1 50	
	68 16	88 45		½ round	5 3 40		
	63 31⅔	90 15	Martin.		5 19 0	5 42 50	
	62 59	91 10		½ round	6 6 40		

Obſervations at Huaheine continued.

Azimuths obſerved by Captain Cooke and Lieutenant King continued.

1777.	Altitude of the Sun's L. L.	Azimuths obſerved.	Compaſs uſed.		Variation deduced.	Mean.	Phenomena and Remarks.
	° ′	° ′			° ′ ″	° ′ ″	
♀ Oct. 24.	27 28⅔	S 79 43 W	Gregory N° 1.		5 18 40	5 27 10	4° 54′ 33″ Eaſt.
	27 13⅔	79 36⅔		½ round	5 25 40		
	26 29⅓	80 0	Do. N° 2.		4 54 0	4 51 30	
	26 30	80 0		½ round	4 49 0		
	29 4	80 28⅓	Knight N° 2.		4 1 0	4 31 0	
	24 44⅔	79 23⅓		½ round	5 1 0		
	24 1⅔	79 30	Do. N° 3.		4 43 20	5 12 20	
	23 33	78 26⅔		½ round	5 41 20		
	22 58⅓	80 20	Do. N° 4.		3 37 0	4 29 0	
	22 37	78 36⅔		½ round	5 15 0		
	21 45⅔	79 0	Martin.		4 33 40	4 56 20	
	20 52	78 8½		½ round	5 14 0		

A mean of all the above reſults is 5^h 1′ 31″ Eaſt.

Equal Altitudes for the Rate of the Clock N° 2.

1777.	Time of Noon per Clock uncorrect.	Half Interval of Obſervations.	Time at Noon per Clock correct.	Clock ſlow for Sidereal Time.	Daily Rate of Clock, loſing.	N° of Obſervations.	Phenomena and Remarks.
	H. ′ ″	H. ′ ″	H. ′ ″	′ ″	′ ″		
♄ Oct. 18.	13 14 33,6	4 31 35	13 14 30,0	17 37,11	1 45,8	11	Sun.
☿ —— 22.	13 22 28,2	5 14 30	13 22 33,0	24 40 50 Faſt	1 45,8	15	Do.
♃ —— 23.	13 54 40,0	5 5 36	13 54 35,4	3 33,70	1 43,8	13	Do.
♀ —— 24.	13 56 44,9	5 0 2	13 56 40,5	1 49,92 Slow	1 45,5	18	Do.
☽ —— 27.	14 2 58,4	4 12 45	14 2 55,3	3 26,70	1 44,9	16	Do.
♂ —— 28.	14 5 5,4	4 5 25	14 5 2,4	5 11 60	1 44,6	17	Do.
♃ —— 30.	14 9 21,2	3 17 48	14 9 19,1	8 40,90		11	Do.

Set the minute hand 30′ forward.

The pendulum vibrated from 1° 34½′ to 1° 37′.

Obſervations at Huaheine continued.

Computations of the Going of the Watch N° 2.

1777.	Time per Watch at Comparison.	Time per Clock by Comparison.	Watch slow for Clock.	Clock gains on Watch.	Interval of Comparisons.	Clock gains of Watch in 24 H.	Clock loses on Sidereal Time.	Watch loses on Sidereal Time.	Watch gets on Mean Time.
	H. ′	H. ′ ″	H. ′ ″	′ ″	H. ′	′ ″	′ ″	′ ″	″
Nov. 16.	8 10	13 19 45	5 9 45						
17.	8 27	13 38 54	5 11 54	2 9	24 17	2 7,50	1 46,26	3 53,76	2,74
18.	8 12	13 26 0	5 14 0	2 6	23 45	2 7,32	1 46,26	3 53,58	2,92
19.	8 5	13 21 6	4 16 6	2 6	23 53	2 6,60	1 46,26	3 52,86	3,64
20.	8 8	13 26 13½	5 18 13½	2 7½	24 3	2 7,24	1 46,26	3 53,50	3,00
21.	8 5	13 25 21	5 20 21	2 7½	23 57	2 7,76	1 46,26	3 54,02	2,48
22.	8 0	13 22 29	5 22 29	2 8	23 55	2 8,44	1 45,60	3 53,04	3,46
23.	8 4	13 58 38	5 54 38	2 9	24 4	2 8,65	1 45,80	3 54,45	2,05
24.	8 4	14 0 47	5 56 47	2 9	24 0	2 9,00	1 43,80	3 52,20	4,30
25.	8 3	14 1 55	5 58 55	2 8	23 59	2 8,08	1 44,80	3 52,88	3,62
26.	8 2	14 3 4	6 1 4	2 9	23 59	2 9,08	1 45,53	3 54,61	1,89
27.	8 1	14 4 11	6 3 11	2 7	23 59	2 7,08	1 45,20	3 52,28	3,22
28.	8 8	14 13 19½	6 5 19½	2 8½	24 7	2 7,90	1 44,90	3 52,80	3,70
29.	8 1	14 8 26½	6 7 26½	2 7	23 53	2 7,61	1 44,70	3 52,31	4,19
30.	8 1	14 10 33	6 9 33	2 6½	24 0	2 6,50	1 44,65	3 51,15	5,35
								Mean rate	3,326 { Getting per day on mean time.

Meridian Zenith Diſtances of the Sun and Stars.

1777.	Zenith Diſtances to the North.	Barom.	Therm.	Latitude deduced.	Phenomena and Remarks.
	° ′ ″		°	° ′ ″	
☽ Oct. 20.	6 25 12	30,17	87	16 41 34	Sun's U. L.
♂ — 21.	6 3 35	30,19	85	16 41 42	Sun.
♃ — 23.	5 0 20	30,20	86	16 42 10	Sun. Mean = 16° 41′ 46¼″ South.
♂ — 28.	3 16 28	30,17	88	16 41 41	Sun.
	Stars.				
♄ — 25.	62 24 20	30,15	78	16 41 13	Capella.
	8 13 22			16 41 41	Rigel.
	45 4 30			16 41 23	β Tauri.
	24 2 20			16 41 44	α Orion.
	0 16 5			16 41 23	Sirius.
	6 8 40			16 41 43	α Cygni.
	15 18 10			16 42 1	α Aquarii.
	14 3 30			16 43 52	Fomalhaut S.
	30 41 55			16 41 34	α Pegaſi.

By obſerving Stars on each ſide of the Zenith I found the correction for the line of collimation to be 1′ 8″ additive to the reſult of obſervations north of the Zenith, but ſubtractive from thoſe to the ſouth of the Zenith. Whence the true lat. is = 16° 42′ 49″ S.

Obſervations at Huaheine continued.

Lunar Obſervations.

1777.	Time per Watch N° 2.	Apparent Time.	Diſtances obſerved.	Z. Diſt. Sun's U. L.	Alt. of Moon's U. L.	Sextant uſed.	Error of Sextant.	Barom.	Therm.	Obſervers	Latitude in.	Longitude in.	Phenomena and Remarks.
	H. ′ ″	H. ′ ″	° ′ ″	° ′	° ′		′ ″		°		° ′ ″	° ′ ″	
♂ Oct. 21.	10 0 57,5	20 38 44	110 27 44	48 45⅓	20 54⅔	D.	+1 0	30,15	79		16 42 49	209 11 0	☽ a Sun.
	10 13 27,6	20 51 10	110 18 52	45 45	18 29	R.	+3 7					208 35 0	Do.
☿ — 22	10 7 41,8	20 13 26	97 48 18	54 44	36 8	R.	+2 45	30,14	80			208 39 30	Do.
	10 17 34,1	20 23 18	97 48 2	52 22	24 25	D.	0 0					208 53 0	Do.
♃ — 23.	10 56 18,6	20 59 53	85 13 7	43 31	38 39	D.	0 0	30,18	81			208 38 45	Do.
	11 1 17,8	21 4 52	85 8 8	42 20	37 54	R.	+2 0					208 0 0	Do.
♀ — 24	13 8 19,0	23 9 37	72 25 31	13 17	26 2	R.	+2 0	30,15	82			208 20 0	Do.
	13 17 37,2	23 18 54	72 23 44	11 33	24 19	B.	+1 0					208 43 45	Do.
											A mean of the above =	208 37 37	Eaſt, or 151° 22′ 23″ Weſt.

Azimuths obſerved with a Compaſs of Knight's Conſtruction.

1777.	Altitudes of ☉'s L. L.	Azimuths obſerved.	Variation.	
	° ′	° ′	° ′ ″	
♃ Nov. 16.	15 42	S 79 58 W	5 7 0 E	
♀ — 17.	14 58	79 32	5 16 0	
	Z.D. ☉ s U.L			
♂ — 21.	73 15	N 88 36 E	4 47 20	Mean variation 5° 1′ 59″ E.
☿ — 22.	70 55	88 52	5 12 6	
♃ — 23.	61 42	S 80 37 W	4 58 31	
	75 33	86 37 E	4 51 0	

Dip of the South Pole of the Needle.

Mark end North.		Mark end South		
E.	W.	E.	W.	Mean.
° ′	° ′	° ′	° ′	
27 26	30 40	28 35	28 37	28 49¼ Plain Needle.
27 33	29 26	31 53	26 59	28 57¾ Balanced Needle.

A mean of the two = 28° 53′ 37″ for the dip.

The water roſe and fell 10¾ inches, at moſt, at full and change, and 6,1 inches at the quadratures, on the full and change days it was high water 10 minutes before noon, or at 11^h 50′ apparent time. The time of high water did not vary more than two hours during a revolution of the Moon, it being at higheſt ſome time between 11 in the morning and 1 in the afternoon, or a kind of ſolar tide.

The obſervations were made between October 14th and 30th, when the Sun was near the Zenith.

Obſervations made at Ulietea.

Equal Altitudes of the Sun.

Time by Clock N° 2.

1777.	Time of Noon per Watch uncorrect.	Half Interva of Obſerva-tions.	Time of Noon per Clock correct.	Clock ſlow for Sidereal Time.	Daily Rate of the Clock.	N° of Ob-ſervations.	Phenomena and Remarks.
	H. ′ ″	H. ′ ″	H. ′ ″	′ ″	′ ″		
				Slow.	Loſing.		
☽ Nov. 6.	14 37 10,4	2 27 7	14 37 9,4	8 27,9	1 52,5	9	Sun.
♂ —— 7.	14 39 20,7	4 54 0	14 39 17,3	10 20,4	1 52,8	18	Do.
☿ —— 8.	14 41 28,0	4 56 24	14 41 24,8	12 13,2		17	Do.
♃ —— 9.	In the morning ſet the minute hand of the Clock forward 20 minutes, but did not alter it otherwiſe.						
				Faſt.			
♄ —— 11.	15 7 22,4	5 11 30	15 7 19,1	1 33,6		18	Do.
	The Clock loſt 35 ſec. more than it ought, between the 8th and 10th, as appears by its compariſons with Captain Cooke's Clock. Probably owing to my moving the minute hand forward.						
				Slow.			
☉ —— 12.	15 9 32,0	5 0 4	15 9 29,0	0 20,5	1 54,1	14	Do.
☽ —— 13.	15 11 44,2	4 39 18	15 11 41,7	2 12,8	1 52,3	13	Do.
☿ —— 15.	15 16 10,3	4 48 28	15 16 7,6	5 59,4	1 53,3	17	Do.
♀ —— 17.	15 20 40,3	4 34 25	15 20 38,1	9 44,6	1 52,6	15	Do.
♄ —— 18.	15 22 57,2	4 33 30	15 22 55,1	11 36,9	1 52,3	16	Do. Pendulum vibrated from
☿ —— 22.	15 32 11,4	5 34 54	15 32 10,1	19 6,9	1 52,5	17	Do. 1° 35′ to 1° 37′½
	Time per Clock ✱ paſſed Merid.		5 22 58,8	20 10,2	1 52,6	3	α Orion.
♃ —— 23.	15 34 33,6	4 36 12	15 34 31,4	20 58,6	1 51,7	17	Sun.
♀ —— 24.	15 36 54,3	5 13 48	15 36 52,1	22 51,8	1 53,2	18	Do.
	In the evening ſet the minute hand of the Clock forward 30 min. but did not alter it otherwiſe.						
				Faſt.			
♄ —— 25.	Time per Clock, ✱ paſſed the Meridian.		5 8 7,1	4 14,6	1 52,6	6	Rigel.
☉ —— 26.	16 11 37,9	4 41 32	16 11 36,5	3 22,1	1 53,5	18	Sun.

Mean rate 1′ 52″,77 loſing on Sidereal Time.

♂ —— 7. Imm. of $\left\{\begin{matrix}\pi\\ \rho\end{matrix}\right\}$ Capr. at ☽'s dark L. $\left\{\begin{matrix}\text{H. ′ ″}\\ 23\ 51\ 32\tfrac{1}{2}\\ 0\ 47\ 5\tfrac{1}{2}\end{matrix}\right\}$ per Clock, or $\left\{\begin{matrix}\text{H. ′ ″}\\ 9\ 11\ 26\tfrac{1}{2}\\ 10\ 6\ 54,7\end{matrix}\right\}$ ap. time.

The Teleſcope was a Dollond's 3½ feet, magnifying power 150 times. The time certain to leſs than a ſecond.

♄ —— 25. Immerſion of the third Satellite of Jupiter at $6^h\ 48'\ 35''$ per Clock, or $14^h\ 37'\ 53''$ apparent time.

The Teleſcope uſed was a Dollond's 3½ feet, magnifying power 150 times.

Observations at Ulietea continued.

Computations of the Rate of the Watch N° 2.

1777.	Time per Watch at Compar.	Time per Clock at Comparison.	Watch slow for Clock.	Clock gains on Watch.	Interval of Comparisons.	Clock gains on Watch in 24 H.	Clock loses on Sidereal Time.	Watch loses on Sidereal Time.	Watch gets on Mean Time.
	H. ′	H. ′ ″	H. ′ ″	′ ″	H. ′	′ ″	′ ″	′ ″	″
Nov. 6.	8 6	14 41 7	6 35 7						
7.	8 5	14 42 7	6 37 7	2 0,0	23 59	2 0,08	1 52,50	3 52,58	+3,92
8.	8 3	14 42 6½	6 39 6½	1 59,5	23 58	1 59,65	1 52,85	3 52,50	+4,00
9.	8 10	15 13 55½	7 3 55½						
10.	8 11	15 13 33¼	7 2 33¼						
11.	8 4	15 8 32½	7 4 32½	1 59,25	23 53	1 59,81	1 54,10	3 53,91	+2,59
12.	8 10	15 16 33	7 6 33	2 0,5	24 6	2 0,02	1 52,30	3 52,32	+4,18
13.	8 8	15 16 32	7 8 32	1 59,0	23 58	1 59,16	1 53,30	3 52,46	+4,04
14.	8 4	15 14 32	7 10 32	2 0	23 56	2 0,32	1 53,30	3 53,62	+2,88
15.	8 4	15 16 32	7 12 32	2 0	24 0	2 0,00	1 53,30	3 53,30	+3,20
16.	8 5	15 19 34	7 14 34	2 2	24 1	2 1,92	1 52,60	3 54,52	+1,98
17.	8 13	15 29 37	7 16 37	2 3	24 8	2 2,36	1 52,60	3 54,96	+1,54
18.	8 11	15 29 39	7 18 39	2 2	23 58	2 2,16	1 52,30	3 54,46	+2,04
19.	8 4	15 24 39	7 20 39	2 0	23 53	2 0,56	1 52,50	3 53,06	+3,44
20.	8 11	15 33 43	7 22 43	2 4	24 7	2 3,44	1 52,50	3 55,94	+0,56
21.	8 6	15 30 47	7 24 47	2 4	23 55	2 4,40	1 52,50	3 56,90	—0,40
22.	8 10	15 36 51	7 26 51	2 4	24 4	2 3,68	1 52,50	3 56,18	+0,32
23.	8 10	15 38 54	7 28 54	2 3	24 0	2 3,00	1 51,70	3 54,70	+1,80
24.	8 10	15 40 56½	7 30 56½	2 2½	24 0	2 2,50	1 53,20	3 55,70	+0,80
25.	8 10	16 12 58	8 2 58	2 1½	24 0	2 1,50	1 53,05	3 54,55	+1,95
26.	8 9	16 14 1	8 5 1	2 3	23 59	2 3,08	1 53,05	3 56,13	+0,37

A mean of all is =2″,1783. By comparing the 7th and 26th the Watch got 43″ in 19 days, or 2″, 263 per day.

Lunar Observations.

1777.	Time per Clock.	Apparent Time.	Distance observed.	Z. Dist. of the Sun and Stars.	Z. D. of ☽'s U. L.	Sextant used.	Error of Sextant.	Barom.	Therm.	Observer.	Latitude in.	Longitude deduced.	Phenomena and Remarks.
	° ′ ″	° ′ ″	° ′ ″	° ′	° ′		′ ″		°		° ′ ″	° ′ ″	
♃ Nov. 6.	19 54 27	5 16 55	62 29 19	75 1½	76 40	D.	+1 30	30,12	86	B.	16 45 42 S.	208 11 45	☽ à Sun.
	20 5 22	5 27 49	62 30 18	77 31½	74 28	R.	+2 45					208 4 52	Do.
				Alt. L. L.									
♀ — 7.	18 58 4½	4 18 24	73 52 40	28 9	14 42	D.	+1 30	29,95	84			208 14 30	Do.
	19 5 36	4 25 56	73 51 57	26 25	13 5	R.	+3 0					208 31 30	Do.
♀ — 21.	13 23 22	21 51 25	91 59 48	30 19	62 47	D.	+0 45	29,98	84			208 35 30	Do.
	13 29 17	21 57 19	91 55 15	28 56	64 2	R.	+2 30					208 26 0	Do.
				Z.D.U.L									
♄ — 22.	10 57 5	19 23 2	81 4 2	65 5	29 50	R.	+0 15	30,00	84			209 2 15	Do.
	11 3 31	19 29 28	81 0 48	63 42	30 12	D.	+2 30					208 57 15	Do.
☉ — 23.	11 21 53	19 45 25	69 34 43	59 45	24 43	R. 2	—2 0	30,10	84			209 8 0	Do.
	11 29 9	19 52 40	69 27 37	58 4	24 51	R. 1	+2 20					208 32 45	Do.
	11 40 38	20 4 8	69 27 5	55 25	25 14	D.	+0 40					208 55 55	Do.
☽ — 24.	12 16 16	19 7 28	58 11 0	54 37	20 13	R. 1	+2 15	30,11	84			208 33 15	Do.
	12 21 32	19 12 34	58 11 33	53 23	20 4	D.	+1 20					209 2 45	Do.
	12 24 32	19 15 34	58 13 23	52 42	19 42	R. 2	—2 0					208 38 30	Do.

A mean of the whole =208° 30′ 45″ East, or 151° 29′ 15″ West.

Obſervations at Ulietea continued.

Obſerved Zenith Diſtances of the Sun and Stars.

1777.	Zenith Diſtances of the Sun and Stars.	Latitude deduced.	Barom.	Therm.	Phenomena and Remarks.
	° ′ ″	° ′ ″	°	°	
Nov. 9.	0 24 20	16 45 53	29,90	84	Sun.
12.	0 42 10	16 45 48	30,05	88	Do.
13.	0 57 0	16 47 4	30,05	90	Do.
22.	3 7 27	16 46 46	30,07	83	Do.
23.	3 20 20	16 46 30	29,99	88	Do.
24.	3 32 22	16 46 47	29,90	86	Do.
25.	3 44 35	16 46 31	29,90	85	Do.
	Zenith Diſtances of Stars.				
22.	39 8 16	16 45 15	30,01	77	α Arietis.
	32 46 35	16 44 27			Aldebaran.
	8 16 20	16 44 48			Rigel.
	45 7 25	16 44 23			β Tauri.
	44 5 5	16 44 34			α Orion.
	44 35 25	16 44 32			α Andromeda.
23.	61 43 57	16 47 0			β Hydræ.
	26 44 48	16 45 59			α Phœnix.
	31 8 34	16 47 29			β Phœnix.
	27 41 4	16 46 49	30,01	77½	γ Phœnix.
	41 35 49	16 46 41			α Eridani.
	45 53 19	16 46 28			α Hydræ.

Mean $= 16° 46' 28''$.

A mean $= 16° 44' 40''$ S. by Stars North of the Zenith.

A mean $= 16° 46' 44''$ S. by Stars S. of the Zenith. Whence the correction of the line of collimation $= 1' 2''$ additive to the reſult of Stars obſerved to the North of the Zenith, and the true Latitude $= 16° 45' 42''$ S.

Azimuths obſerved.

1777.	Altitude of ☉'s L. L.	Azimuths obſerved.	Variation.	Phenomena and Remarks.
	° ′	° ′	° ′	
Nov. 10.	16 52 Z.D. U.L.	S 70 14 W	6 24 E	Sun.
11.	78 36	81 31 E	6 30	Do.
	78 46	68 26 W	6 20	Do.
12.	73 45	82 0 E	6 6	Do.
	77 31	68 43 W	6 31	Do.

Mean variation $= 6° 22' 12''$ Eaſt.

Obſervations at Ulietea continued.

Dip of the South Pole of the Needle.

Mark End North. E.	Mark End North. W.	Mark End South. E.	Mark End South. W.		
° ′	° ′	° ′	° ′		
29 36	28 20	26 44	33 26	Plain Needle —mean 29° 31′⅓	Mean dip 29° 28′ 18″.
31 20	28 13	29 2⅓	29 5	Balanced Needle —mean 29 25,1	

During my reſidence on ſhore, I made conſtant obſervations on the tides. The water roſe and fell 5 inches at the quadratures, and 9¾ inches at full and change. The time of high water varied from 10 in the morning to one in the afternoon, and that in the two following days, which ſeemed owing to different winds; for in general it was high water 9 or 10 minutes before the Sun was on the Meridian; from whence it ſhould ſeem that the Sun had great influence on the water, it being near the zenith of the place.

Equal Altitudes of the Sun by Captain Cooke and Lieutenant King.

1777.	Time of Noon per Clock, N° 1. uncorrect.	Half Interval.	Time of Noon per Clock, correct.	Clock ſlow for Sidereal Time.	Daily Rate of Clock.	N° of Obſervations	Phenomena and Remarks.
	H. ′ ″	H. ′ ″	H. ′ ″	′ ″	′ ″		
Nov. 7.	14 39 52,7	4 29 0	14 39 50	9 47,27	Loſing. 1 57,73	23	Sun.
♄ —— 8.	14 41 55,5	4 25 40	14 41 53	11 45,00	1 57,59	24	Do.
☉ —— 9.	14 43 57,5	2 6 27	14 43 57	13 42,59	1 58,90	10	Do.
♂ —— 11.	14 48 8,1	5 1 6	14 48 5	17 40,40	1 59,64	17	Do.
☿ —— 12.	14 50 12,7	5 10 31	14 50 9	19 40,04	1 58,05	23	Do.
♀ —— 14.	14 54 26,7	4 55 30	14 54 24	23 36,15	1 57,94	13	Do.
♄ —— 15	14 56 35,0	4 39 39	14 56 32,6	25 34,10	2 0,02	17	Do.
☽ —— 17.	15 0 50,4	4 36 29	15 0 48,2	29 34,15	1 59,66	18	Do.
♂ —— 18.	15 2 59,7	4 33 33	15 2 59,0	31 33,81	1 59,00	17	Do.
♄ —— 22.	15 11 49,4	5 26 13	15 11 46,6	39 29,82	1 59,13	13	Do.
☽ —— 24.	15 16 18,5	5 28 23	15 16 15,7	43 28,09	1 58,47	18	Do.
☿ —— 26.	15 20 50,8	4 30 59	15 20 49,4	47 25,04		21	Do.

Obſervations at Ulietea continued.

Compariſons of the Clock and Watch N° 1. at the Friendly Iſlands.

At Otaheite.

1777.	Time by the Clock N° 1.	Time by the Watch N° 1.	Mean Time of Compariſon.	Watch ſlow for Mean Time.	Rate of the Watch.
	H. ′	H. ′ ″	H. ′ ″	H. ′ ″	″
☉ Aug. 31.	10 48	9 58 43½	24 17 58,47	14 19 14,97	Loſing.
☽ Sept. 1.	10 42	9 50 32¼	24 9 48,31	14 19 16,06	1,10
♂ —— 2.	10 36	9 42 20¾	24 1 38,17	14 19 17,42	1,37
☿ —— 3.	10 43	9 47 8	24 6 26,72	14 19 18,72	1,30
♃ —— 4.	10 37	9 38 57	23 58 18,31	14 19 21,31	2,57
♀ —— 5.	10 40	9 39 44½	23 59 7,87	14 19 23,37	2,06
♄ —— 6.	10 50	9 47 32¾	24 6 56,44	14 19 23,69	0,32
☉ —— 7.	10 45	9 40 21½	23 59 46,61	14 19 25,11	1,43
☽ —— 8.	10 48	9 41 10	24 0 36,58	14 19 26,58	1,47
♂ —— 9.	10 54	9 44 57½	24 4 25,70	14 19 28,20	1,63
☿ —— 10.	11 39	9 57 44¼	24 17 13,28	14 19 29,03	0,84
♃ —— 11.	11 26	9 42 31	24 2 2,19	14 19 31,19	2,14
♀ —— 12.	11 26	9 40 16¼	23 59 49,92	14 19 33,67	2,48
♄ —— 13.	11 27	9 39 1	23 58 36,52	14 19 35,52	1,85
☉ —— 14.	11 28	9 37 47⅔	23 57 24,38	14 19 36,98	1,46
☽ —— 15.	11 32	9 39 33	23 59 11,92	14 19 38,92	1,94
♂ —— 16.	11 36	9 41 19	24 0 59,52	14 19 40,52	1,60
☿ —— 17.	11 33	9 36 4¾	23 55 47,59	14 19 42,84	2,33
♃ —— 18.	11 58	9 58 49	24 18 33,19	14 19 44,19	1,33
♀ —— 19.	11 44	9 42 37	24 2 21,81	14 19 44,81	0,73
♄ —— 20.	11 47	9 43 23¼	24 3 8,90	14 19 45,65	0,84

At Huaheine.

♀ Oct. 17.	13 39	9 57 30	24 12 5,79	14 14 35,79	
♄ —— 18.	13 26	9 42 25½	23 57 4,90	14 14 39,40	3,65
☉ —— 19.	13 19	9 33 21	23 48 3,24	14 14 42,24	2,86
☽ —— 20.	13 32	9 44 15⅔	23 58 59,91	14 14 44,31	2,06
♂ —— 21.	13 26	9 36 12	23 50 58,15	14 14 46,15	1,85
☿ —— 22.	13 22	9 30 9	23 44 57,51	14 14 48,51	2,37
♃ —— 23.	13 20	9 26 6½	23 40 57,12	14 14 50,62	2,12
♀ —— 24.	14 15	9 39 7	23 53 58,05	14 14 51,05	0,43
♄ —— 25.	14 9	9 31 4	23 45 57,16	14 14 53,16	2,12
☉ —— 26.	14 12	9 31 54¾	23 46 55,62	14 14 55,87	2,71
☽ —— 27.	14 16	9 33 56¼	23 48 53,73	14 14 57,48	1,61
♂ —— 28.	14 31	9 47 50	24 2 51,29	14 15 1,04	3,52

Obſervations at Ulietea continued.

Compariſons of the Clock and Watch N° 1. at Ulietea.

1777.	Time by the Clock N° 1.	Time by the Watch N° 1.	Mean Time of Compariſon.	Watch ſlow for Mean Time.	Rate of the Watch.
	H. ′	H. ′ ″	H. ′ ″	H. ′ ″	″
♀ —— 7.	14 41	9 31 30	23 45 6,05	14 13 36,05	2,40
♄ —— 8.	14 41	9 29 29	23 43 7,45	14 13 38,45	2,21
☉ —— 9.	14 47	9 33 28½	23 47 8,17	14 13 39,67	2,45
☽ —— 10.	14 46	9 30 29	23 44 11,11	14 13 42,11	2,25
♂ —— 11.	14 53	9 35 28½	23 49 12,88	14 13 44,38	2,67
☿ —— 12.	14 52	9 32 29	23 46 16,03	14 13 47,03	1,02
♃ —— 13	14 59	9 37 29	23 51 17,05	14 13 48,05	0,62
♀ —— 14.	14 59	9 35 30¼	23 49 18,92	14 13 48,67	0,64
♄ —— 15.	14 58	9 32 51	23 46 20,31	14 13 49,31	1,45
☉ —— 16.	15 0	9 32 33	23 46 23,76	14 13 50,76	0,70
☽ —— 17.	15 6	9 36 35	23 50 26,46	14 13 51,46	1,06
♂ —— 18.	15 7	9 35 37½	23 49 30,02	14 13 52,52	2,06
☿ —— 19.	15 4	9 30 38¼	23 44 33,47	14 13 54,57	1,86
♃ —— 20.	15 10	9 34 38½	23 48 34,93	14 13 56,43	1,02
♀ —— 21.	15 7	9 29 42¼	23 43 39,78	14 13 57,45	1,03
—— 22.	15 11	9 34 41¼	23 45 40,13	14 13 58,88	0,87
☉ —— 23.	15 17	9 35 42¾	23 49 42,10	14 13 59,35	1,25
☽ —— 24.	15 19	9 35 44	23 49 44,60	14 14 0,60	1,04
♂ —— 25.	15 20	9 34 45	23 48 46,64	14 14 1,64	2,70
☿ —— 26.	15 24	9 36 43½	23 50 47,84	14 14 4,34	

By a mean of theſe 50 reſults the Watch N° 1. is loſing 1″, 69 per day on mean time.

Compariſons of the Clocks and Watches at the Society Iſlands.

1777.	Compariſons of the Clocks N° 1.	Compariſons of the Clocks N° 2.	Compariſons of the Watches N° 1.	Compariſons of the Watches N° 2.
	H. ′ ″	H. ′ ″	H. ′ ″	H. ′ ″
Aug. 31.	10 51 48	10 52 0	10 5 0	8 30 55⅔
Sept. 1.	10 45 0	10 44 47¼	9 55 0	8 21 0
2.	10 51 0	10 50 47	9 59 55½	8 26 0
3.	10 47 0	10 46 46¼	9 53 50	8 20 0
4.	10 42 13¼	10 42 0	9 46 0	8 12 16
5.	10 49 13½	10 49 0	9 50 37¼	8 17 0
6.	10 52 0	10 51 46¾	9 51 31¾	8 18 0
7.	10 52 0	10 51 46	9 49 0	8 15 34¾
8.	10 52 0	10 51 46¼	9 47 20¼	8 14 0
9.	10 54 0	10 53 46¾	9 47 0	8 13 46¼
10.	11 39 0	11 38 45	10 0 0	8 26 52¼
11.	11 26 0	11 25 42¼	9 44 0	8 10 59¾
12.	11 29 0	11 28 40	9 44 55	8 12 0
13.	11 34 0	11 33 38¼	9 46 50¼	8 14 0
14.	13 34 24¼	13 34 0		
15.	11 34 26	11 34 0	9 43 0	8 10 39¾

Obſervations at Ulietea continued.

Compariſons of the Clocks and Watches at the Society Iſlands.

1777.	Compariſons of the Clocks. N° 1.	Compariſons of the Clocks. N° 2.	Compariſons of the Watches. N° 1.	Compariſons of the Watches. N° 2.
	H. ′ ″	H. ′ ″	H. ′ ″	H. ′ ″
Sept. 16.	11 39 27½	11 39 0	9 45 36	8 13 0
17.	11 36 0	11 35 31¼	9 40 0	8 7 28¾
18.	11 59 30	11 59 0	10 1 27	8 29 0
19.	11 44 0	11 43 29	9 44 22	8 12 0
20.	11 55 0	11 54 28	9 52 18¼	8 20 0
		At Huaheine.		
Oct. 16.	13 20 55¼	13 21 0	9 43 15	8 13 0
17.	13 41 47½	13 42 0	10 0 2	8 31 48
18.	13 28 40	13 29 0	9 46 5¾	8 16 0
19.	13 24 0	13 24 28¼	9 40 0	8 10 1
20.	13 32 0	13 32 36¼	9 45 53½	8 16 0
21.	13 27 0	13 27 44¼	9 38 49	8 9 0
22.	13 23 0	13 23 53¾	9 32 44	8 3 0
23.	13 31 56	13 13 0	9 39 40	8 10 0
24.	14 16 41¼	14 8 0	9 42 0	8 12 25
25.	14 9 0	14 0 27¼	9 33 0	8 3 28¼
26.	14 15 23	14 7 0	9 36 26¾	8 7 0
27.	14 16 0	14 7 47	9 35 20½	8 6 0
28.	14 31 0	14 23 57	9 49 14	8 20 0
29.	14 18 0	14 10 4	9 33 0	8 3 53
30.	14 19 0	14 11 12	9 31 59¼	8 3 0
		At Ulietea.		
Nov. 7.	14 44 0	14 43 28	9 36 0	8 7 50½
8.	14 45 0	14 44 31½	9 35 0	8 6 56½
9.	14 56 0	15 15 25	9 43 58	8 16 0
10.	14 55 0	15 14 8½	9 45 0	8 17 7
11.	14 50 46½	15 10 0	9 35 0	8 7 12
12.	14 58 40¾	15 18 0	9 40 42¾	8 13 0
13.	15 0 0	15 19 25	9 39 36¼	8 12 0
14.	15 0 0	15 19 30¾	9 38 0	8 10 27½
15.	14 59 0	15 18 36	9 35 0	8 7 32
16.	15 4 0	15 23 43	9 38 24	8 11 0
17.	15 11 0	15 30 50	9 43 0	8 15 38
18.	15 12 0	15 31 57	9 42 0	8 14 41
19.	15 6 56¾	15 26 0	9 36 0	8 8 46½
20.	15 14 48¾	15 35 0	9 41 0	8 13 49¾
21.	15 12 0	15 32 18½	9 36 0	8 8 49⅓
22.	15 17 36	15 32 0	9 40 0	8 12 52½
23.	15 21 0	15 41 30	9 42 0	8 14 54
24.	15 21 0	15 41 36½	9 39 4	8 12 0
25.	15 24 18	16 15 0	9 40 0	8 12 59½
26.	15 25 0	15 15 47½	9 39 55¼	8 13 0

Obſervations at Ulietea continued.

Zenith Diſtances of Stars obſerved by Captain Cooke and Lieutenant King.

1777.	Zenith Diſtance obſerved.	Corrected Zenith Diſtance.	Barom.	Therm.	Declination.	Latitude deduced.	No of Obſervations.	Object obſerved.
	° ′ ″	° ′ ″		°	° ′ ″	° ′ ″		
Nov. 20.	30 41 0	30 42 54	30,00	81	13 57 6,5	16 45 47,6	2	γ Pegaſi.
	61 42 15	61 45 30½			78 30 48,7	16 45 18,2	3	β Hydræ.
	31 7 45	31 9 39½			47 54 58,5	16 45 19,1	2	β Phenix.
	41 34 25½	41 36 36			58 21 51,2	16 45 15,2	3	α Eridani.
	45 51 35	45 53 53½			62 39 31,4	16 45 37,8	2	α Hydræ.
	19 1 20	19 2 59½			2 17 39,6	16 45 20,0	1	γ Ceti.
	24 24 27	24 26 13			41 12 1,6	16 45 48,6	2	θ Eridani.
	35 23 30	35 25 30½			18 40 23,1	16 45 7,4	1	ε Taurus.
	32 46 45	32 48 41½			16 2 52,4	16 45 49,2	2	Aldebaran.
	8 15 40	8 17 8			8 28 29,4	16 45 37,7	2	Rigel.
	22 52 10	22 53 54			6 7 56,6	16 45 57,4	2	γ Orion.
	37 43 30	37 45 34	30,00	81½	20 59 23,9	16 46 1,2	2	ζ Taurus.
	24 4 50	24 6 35½			7 21 0,5	16 45 35,1	2	α Orion.
	35 27 0	35 49 1			52 35 1,0	16 46 0,0	2	α Canopis.
	26 13 20	26 15 8			43 0 50,3	16 45 42,2	2	ι Argo.
	25 27 20	25 29 7			8 43 22,6	16 45 44,6	2	β Canis Minor.
	22 30 7½	22 31 51			5 46 3,0	16 45 48,8	2	Procyon.
	39 5 45	39 7 51			22 22 25,4	16 45 25,9	2	δ Pollux.
	22 35 15	22 36 58½			39 22 56,1	16 45 57,5	2	ζ Argo.
	29 54 0	29 55 53			46 41 2,8	16 45 10,0	2	γ Argo.
	25 45 30	25 47 17½			42 32 22,5	16 45 5,0	2	λ Argo.
	51 59 30	52 2 3			68 47 58,6	16 45 55,8	2	ϵ Argo.
24.	1 13 40	1 31 16	29,97	84	18 16 6,0	16 44 50,0	1	Sun.
25.	3 44 0	4 1 41	29,95	83	20 47 24,0	16 45 43,0	1	Sun.

All theſe obſervations of Stars were made between the 20th and 25th.
A mean of the above 24 reſults gives the latitude 16° 45′ 22″,4 South.

	Time per Clock.	Apparent Time.	
	H. ′ ″	H. ′ ″	
Nov. 7.	0 47 36	10 6 54,2	Cooke } Immerſion of ρ Capricorni by the Moon.
	0 47 35½	10 6 53,7	King }
			Capt. Cooke uſed Dollond's 3½ feet Teleſcope, magnifying 150 times. Mr. King uſed a 2 feet Reflector by Bird, magnifying 90 times. The air was very clear and the immerſion inſtantaneous.
25.	5 27 20	14 37 54	} Imm. 3d Satellite of Jupiter { Capt. Cooke with Bird's two feet, magnifying 90 times.
	5 57 40	14 37 44	{ Lieut. King with Dollond's 3½ f. d° 150 times.

This obſervation doubtful to 10 ſeconds.

Obſervations at Ulietea continued.

Lunar Obſervations by Captain Cooke and Lieutenant King.

1777.	Time per Clock. H ′ ″	Apparent Time. H. ′ ″	Diſtance obſerved. H. ′ ″	Alt. of the ☉'s L. L. ° ′	Z. D. of the ☽'s U. L. ° ′	Sextant uſed.	Error of Sextant. ′ ″	Barom.	Therm. °	Obſerverſ	Latitude in. ° ′ ″	Longitude deduced. ° ′ ″	Phenomena and Remarks.
♀ Nov. 7.	7 47 6	5 6 50	74 3 42	16 49	5 39	B.	+1 0	29,90	73	C	16 45 40	208 12 45	☽ a Sun.
	7 47 6	5 6 50	74 7 55	16 49	5 39	R. 1	+0 15			K		207 43 15	Do.
	7 51 39	5 11 29	74 3 42	15 45	5 14	R. 1	+0 15			C		207 39 30	Do.
	7 51 39	5 11 29	74 7 55	15 45	5 14	B.	+1 0			K		208 23 25	Do.
♀—21.	13 47 8	22 35 29	91 41 7	20 28	17 45	D.	+0 42	30,00	80	C		208 23 15	Do.
	13 47 8	22 35 29	91 43 52	20 28	17 45	R. 1	−2 52			K		208 13 0	Do.
	13 51 1	22 39 23	91 42 27	19 5	16 51	R. 1	−2 52			C		207 52 45	Do.
	13 51 1	22 39 23	91 38 49	19 5	16 51	D.	+0 42			K		208 12 30	Do.
♄—22.	12 24 8	21 10 25	80 34 7½	49 46	43 29	D.	0 0	30,07	83	C		208 42 6	Do.
	12 24 8	21 10 25	80 33 51	49 46	43 29	R. 1	0 0			K		208 32 15	Do.
	12 31 23	21 17 38	80 33 45	51 28	44 48	R. 1	0 0			C		208 53 30	Do.
	12 31 23	21 17 38	80 33 45	51 28	44 48	D.	0 0			K		208 34 40	Do.
	12 45 41	21 31 55	80 26 35	54 48	47 28½	B.	0 0			C		208 6 45	Do.
	12 45 41	21 31 55	80 29 20	54 48	47 28½	R. 2	−1 30			K		208 43 13	Do.
	12 49 4	21 35 18	80 28 22	55 30	48 7	R. 2	−1 30			C		208 51 35	Do.
	12 49 4	21 35 18	80 25 27	55 30	48 7	B.	0 0			K		208 8 0	Do.
	13 4 7	21 50 29	80 23 12	59 9	51 5	R. 4	−2 20			C		208 23 15	Do.
	13 4 7	21 50 29	80 21 7	59 9	51 5	R. 3	−0 45			K		208 7 15	Do.
	13 8 37	21 54 49	80 20 35	37 49	51 56	R. 3	−0 45			C		208 36 0	Do.
	13 8 37	21 54 49	80 26 52	37 49	51 56	R. 4	−2 20			K		208 21 40	Do.
☉—23.	13 27 41	22 11 35	68 50 22	64 5	44 5	D.	+0 15	29,99	89	C		208 11 27	Do.
	12 27 41	22 11 35	68 51 12	64 5	44 5	R. 1	−0 10			K		208 25 0	Do.
	13 31 15	22 15 9	68 50 45	64 54	44 51	R. 1	−0 10			C		208 45 27	Do.
	13 31 15	22 15 9	68 49 57	64 54	44 51	D.	+0 15			K		208 32 0	Do.
	13 43 46	22 27 38	68 49 40	67 50	47 20	R. 4	−3 0			C		208 46 18	Do.
	13 43 46	22 27 38	68 49 7	67 50	47 20	R. 2	−2 23			K		208 49 0	Do.
	13 46 59	22 30 53	68 47 57	68 35	48 0	R. 2	−2 23			C		208 45 0	Do.
	13 46 59	22 30 53	68 48 47	68 35	48 0	R. 4	−3 0			K		208 57 15	Do.
	14 1 57	22 45 48	68 39 5	72 13	51 9	B.	+0 15			C		207 54 0	Do.
	14 1 57	22 45 48	68 41 27	72 13	51 9	R. 3	−1 45			K		208 17 0	Do.
	14 4 43	22 48 33	68 40 55	72 42	51 44	R. 3	−1 45			C		208 28 4	Do.
	14 4 43	22 48 33	68 38 20	72 42	51 44	B.	+0 15			K		208 30 45	Do.
☽—24.	13 46 33	22 28 8	57 36 5	67 55	36 20	R. 1	−0 5	29,97	86	K		208 32 45	Do.
	13 51 31	22 33 7	57 35 40	69 5	37 20	R. 2	+2 10			K		208 3 30	Do.
	13 58 30	22 40 4	57 32 27	70 41	38 39	D.	+0 15			K		208 38 30	Do.
	14 2 34	22 44 8	57 30 52	71 37	39 38	R. 2	−2 45			K		208 26 30	Do.
	14 14 45	22 56 17	57 25 17	74 24	42 13	B.	+1 45			K		208 7 15	Do.
	14 18 48	23 0 21	57 18 15	75 20	43 5	R. 2	−2 22			K		208 7 45	Do.

A mean of theſe 38 reſults gives 208° 23′ 38″ the longitude Eaſt, or 151° 36′ 22″ Weſt.

Azimuths obſerved by Captain Cooke and Lieutenant King.

1777.	Zen. Diſt of the ☉'s U. L. ° ′	Azimuths of the Sun. ° ′	Maker of the Compaſs.		Variation deduced. ° ′ ″	Means. ° ′ ″	Phenomena and Remarks.
Nov. 6.	77 21	S 83 45 E	Gregory.	½ round	7 13 0	7 2 30	Sun.
	76 58	83 30			6 52 0		
	76 19	81 23	Knight N° 2.	½ round	4 35 20	5 49 50	Do.
	75 15	84 8			7 4 20		
	74 19	83 18	Do. N°3.	½ round	6 0 20	6 29 50	Mean 6° 38′ 46″ E.
	73 56	84 23			6 59 20		
	72 24	84 23	Do. N°4.	½ round	6 35 40	6 51 50	Sun. Do.
	71 59	85 0			7 8 2		
	71 11	84 50	Martin.	½ round	6 46 0	6 59 50	Do.
	70 43	86 21			8 13 40		

Obſervations at Ulietea continued.

Azimuths obſerved by Captain Cooke and Lieutenant King continued.

1777.	Altitudes of the ☉'s L. L.	Azimuths of the Sun.	Maker of the Compasses.		Variation deduced.	Mean.	Phenomena and Remarks.
	° ′	° ′			° ′ ″	° ′ ″	
♀ Nov. 7.	25 54	S 71 41¼ W	Gregory N° 1.	½ round	7 54 45	7 53 0	Sun.
	25 19	71 38¾			7 51 15		
	24 41	72 20⅓	Do. N° 2.	½ round	7 2 0	6 53 50	Do.
	24 18	72 28⅓			6 45 20		
	23 33	72 36⅔	Knight N° 2.	½ round	6 29 20	6 44 50	Do.
	23 11	72 1⅔			7 0 20		Mean 7° 7′ 48″ E.
	22 37	72 26⅔	Do. N° 4.	½ round	6 27 20	6 48 30	Sun.
	22 14	71 38⅔			7 9 40		
	21 38	71 30	Martin.	½ round	7 10 0	7 18 50	Do.
	21 13	71 6⅓			7 27 40		
	Z. D. of ☉'s U.L.						
	76 53	S 82 43⅓ E	Gregory N° 1.	½ round	6 23 20	6 22 40	Do.
	76 27⅔	82 50			6 22 0		
	74 43	82 40	Do. N° 2.	½ round	5 46 0	5 52 40	Do.
	74 42	82 13⅓			6 9 20		
	73 41	82 46⅔	Knight N° 4.	½ round	5 28 40	5 57 50	Do.
	72 22	83 55			6 27 0		Mean 6° 16′ 6″ E.
	71 49⅔	83 45	Do. N° 4.	½ round	6 9 0	6 10 0	Do.
	70 59	84 5			6 11 0		
	69 32	84 50	Martin.	½ round	6 42 0	7 7 20	Do.
	68 57	85 56⅓			7 32 40		
♄ —— 8.	69 46⅓	S 71 35 W	Gregory N° 1.	½ round	6 19 40	6 22 20	Do.
	70 5⅓	71 25			6 35 0		
	70 57⅔	71 15⅔	Do. N° 2.	½ round	6 23 0	6 17 0	Do.
	71 20⅓	71 22⅓			6 11 0		
	72 6⅓	71 13	Knight N° 2.	½ round	6 9 40	6 3 30	Do.
	72 32⅔	71 20⅔			5 57 20		Mean 6° 21′ 58″ E.
	74 1⅓	70 11⅔	Do. N° 4.	½ round	5 41 20	6 16 50	Do.
	74 21⅓	70 6			6 52 20		
	75 22⅔	69 35	Martin.	½ round	6 58 0	6 50 9	Do.
	75 41⅓	69 46			6 42 20		

A mean of the 4 means is — 6° 36′ 9″ the variation East.

The above Azimuths were obſerved on board the ſhip, and the Zenith diſtances were obſerved on ſhore with the Aſtronomical Quadrant.

Obſervations made at King George's Sound.

Equal Altitudes of the Sun obſerved at King George's Sound by Capt. Cooke and Lieut. King.

1778.	Time of Noon per Clock, uncorrect.	Half Interval of Obſervations.	Time of Noon per Clock correct.	Clock ſlow for Sidereal Time.	Daily Rate of the Clock.	No of Obſervations.	Phenomena and Remarks.
	H. ′ ″	H. ′ ″	H. ′ ″	′ ″	″		
♃ ~~April~~ 2.	0 35 35,0	3 12 42	0 35 16,3	9 34,66	Losing. 2,70	12	Sun.
♀ —— 3.	0 39 13,6	4 32 34	0 38 52,1	9 37,36	3,36	17	Do.
♄ —— 4.	0 42 47,6	4 14 26	0 42 27,2	9 40,72	4,18	22	Do.
☉ —— 5.	0 46 23,0	4 30 26	0 46 1,6	9 44,90	2,64	22	Do.
♄ —— 11.	1 8 0,3	4 6 45	1 7 41,2	10 0,71	2,00	10	Do.
♀ —— 17.	1 29 54,2	4 51 46	1 29 34,1	10 12,73		34	Do.
	1 29 52,4	4 11 37	1 29 34,4				Do.
♄ —— 18.	1 33 34,3	4 48 53	1 33 34,5	10 14,68	1,95	18	Do.
☉ —— 19.	1 37 14,6	4 40 23	1 36 55,6	10 16,16	1,48	22	Do.
☽ —— 20.	1 40 54,3	4 26 17	1 40 36,1	10 18,57	2,41	17	Do.
♂ —— 22.	1 48 14,7	4 17 2	1 47 57,4	10 24,75	3,09	15	Do.
☿ —— 23.	1 51 55,4	4 23 37	1 51 38,0	10 28,50	3,75	18	Do.

Mean rate of loſing 2,756 per day on ſidereal time.

Compariſon of the Clocks and Watches.

1778.	Clocks, N° 1.	Clocks, N° 2.	Watches, N° 1.	Watches, N° 2.
	H. ′ ″	H. ′ ″	H. ′ ″	H. ′ ″
♃ ~~April~~ 2.	0 49 58¾	0 50 0		
♀ —— 3.	0 42 0	0 42 0	8 7 36¾	6 46 0
♄ —— 4.	0 48 0	0 47 59	8 10 42	6 49 0
☉ —— 5.	0 50 0	0 49 58	8 7 51¾	6 46 0
☽ —— 6.	0 49 0	0 48 56¾	8 3 59	6 42 0
♂ —— 7.	0 59 4¾	0 59 0	8 10 0	6 47 51
☿ —— 8.	1 12 0	1 11 54¾	8 18 19	6 56 0
♃ —— 9.	1 8 0	1 7 53	8 11 0	6 48 35¾
♀ —— 10.	1 7 0	1 6 51¾	8 5 30¾	6 43 0
♄ —— 11.	0 58 0	0 57 50	7 55 31¾	6 33 0
☉ —— 12.	1 14 0	1 13 49	8 4 37	6 42 0
☽ —— 13.	1 28 0	1 27 47	8 14 35¾	6 52 0
♂ —— 14.	1 20 0	1 19 45¾	8 3 0	6 40 21
☿ —— 15.	1 24 16	1 24 0	8 3 39¾	6 41 0
♃ —— 16.	1 31 18¾	1 31 0	8 5 40¾	6 43 0
♀ —— 17.	1 33 0	1 32 40	8 3 42¾	6 41 0
♄ —— 18.	1 34 23	1 34 0	8 0 0	6 37 15
☉ —— 19.	1 43 25	1 43 0	8 5 0	6 42 11¾
☽ —— 20.	1 47 26¾	1 47 0	8 5 50	6 43 0
♂ —— 21.	2 10 0	2 9 32¾	8 24 53	7 2 0
☿ —— 22.	1 59 28	1 59 0	8 9 0	6 46 8¾
♃ —— 23.	2 0 29	2 0 0	8 6 0	6 43 7¾

Observations at King George's Sound continued.

Computation of the Going of the Watch N° 1.

1778.	Time per Watch at Comparison with Clock.	Mean Time of Comparison.	Watch slow for Mean Time.	Time per Clock at Comparison.	Watch losing on Mean Time per Day.	Phenomena and Remarks.
	H. ′ ″	H. ′ ″	H. ′ ″	H. ′	″	
♀ April 3.	8 11 36¾	24 11 33,9	15 59 57,65	0 57		
4.	8 8 40¼	24 8 31,6	16 0 1,10	0 48	3,46	
5.	8 10 47¾	24 10 48,9	16 0 1,14	0 54	0,04	
6.	8 5 53	24 5 56,0	16 0 2,97	0 53	1,83	
7.	8 4 59	24 5 2,0	16 0 3,01	0 56	0,04	
8.	8 14 3¾	24 14 6,7	16 0 3,21	1 9	0,20	
9.	8 9 4⅔	24 9 13,6	16 0 8,96	1 8	5,77	Capt. Cooke rejected the 5 first results, and took a mean of the last 15 which gives 7″,0 for the rate of the Watch N° 1. losing per day on mean time. He also computes it to be 16ʰ 00′ 58″,45 slow for mean time the 16th of April at noon, at King George's Sound.
10.	8 0 7¼	24 0 21,1	16 0 13,59	1 3	4,65	
11.	7 55 7	23 59 27,1	16 0 20,10	1 6	6,51	
12.	8 2 5¾	24 2 32,3	16 0 27,02	1 13	6,90	
13.	8 10 58⅓	24 14 36,3	16 0 37,99	1 26	10,9	
14.	8 4 58¼	24 5 42,7	16 0 44,20	1 24	6,23	
15.	8 4 55¾	24 5 48,2	16 0 52,43	1 28	8,23	
16.	7 59 54	24 0 54,4	16 1 0,42	1 27	8,01	
17.	7 57 52	23 59 0,2	16 1 8,19	1 29	7,78	
18.	7 57 50¾	23 59 5,4	16 1 15,14	1 33	6,95	
19.	8 1 49½	24 3 9,6	16 1 20,09	1 41	4,94	
20.	7 58 49	24 0 16,0	16 1 27,03	1 42	6,95	
21.	8 22 26⅔	24 24 18,9	16 1 32,55	2 10	5,43	
22.	8 0 48⅔	24 2 28,8	16 1 40,11	1 52	7,66	
23.	7 57 48¼	23 59 36,5	16 1 48,21	1 53	8,11	

Lunar Observations made at King George's Sound by Captain Cooke and Lieutenant King.

1778.	Time per Watch N° 1.	Apparent Time.	Distances observed.	Alt. of the ☉ and Stars.	Z. Dist. of ☽'s U. L.	Sextant used.	Error of Sextant.	Barom.	Therm.	Observers	Latitude in.	Longitude deduced.	Phenomena and Remarks.
	H. ′ ″	H. ′ ″	° ′ ″	° ′	° ′		′ ″		°		° ′ ″	° ′ ″	
24 April 2.	4 2 57	3 27 10	58 52 58	62 35	60 10	R. 1	0 0	30,14	59½	K	49 36 5 N	233 6 0	☽ à Sun.
	4 8 12	3 32 24	58 54 27	63 20	60 18	R. 2	0 0			K		233 12 45	Do.
	4 20 5	3 44 9	59 0 22	65 3	60 21	D.	0 0			K		232 50 15	Do.
♀ — 3.	1 5 38	0 26 43	71 4 3	45 26	57 27	B.	0 0			C		233 22 45	Do.
	1 5 38	0 26 43	71 4 15	45 26	57 27	R. 2	0 0	30,04	51	K		233 17 30	Do.
	1 10 4	0 31 8	71 6 5	45 15	56 45	R. 2	0 0			C		233 24 15	Do.
	1 10 4	0 31 8	71 5 40	45 15	56 45	B.	0 0			K		233 36 0	Do.
	1 27 54	0 48 48	71 16 16	44 25	53 57	R. 4	0 0			C		232 38 45	Do.
	1 27 54	0 48 48	71 15 10	44 25	53 57	D.	0 0			K		233 4 15	Do.
	1 31 50	0 52 52	71 16 20	44 5	53 20	D.	0 0			C		233 23 45	Do.
	1 31 50	0 52 52	71 17 11	44 5	53 20	R. 4	0 0			K		233 2 30	Do.
	1 44 50	1 5 50	71 23 11	43 25	51 18	R. 1	0 0			C		233 2 45	Do.
	1 44 50	1 5 50	71 23 9	43 25	51 18	R. 3	0 0			K		233 3 30	Do.
	1 49 51	1 10 50	71 26 17	43 10	50 32	R. 3	0 0			C		232 43 45	Do.
	1 49 51	1 10 50	71 25 6	43 10	50 32	R. 1	0 0			K		233 16 15	Do.
	8 4 0	7 24 2	59 2 48	48 40	39 7	D.	0 0	30,00	48	C		233 21 30	☽ à Regulus.
	8 4 0	7 24 2	59 2 38	48 40	39 7	R. 1	0 0			K		233 3 0	Do.
	8 11 35	7 31 31	59 0 1	49 10	40 9	R. 1	0 0			C		233 41 30	Do.
	8 11 35	7 31 31	58 59 28	49 10	40 9	D.	0 0			K		233 23 30	Do.
	8 23 21	7 43 5	58 53 48	49 57	41 37	B.	0 0			C		233 23 0	Do.
	8 23 21	7 43 5	58 54 45	49 57	41 37	R. 2	0 0			K		233 46 30	Do.

Observations at King George's Sound continued.

Lunar Observations at King George's Sound continued.

1778.	Time per Clock No. 1. H. ′ ″	Apparent Time. H. ′ ″	Distances observed. ° ′ ″	Alt. of the ☉ and Stars. ° ′	Zen. Dist. of the ☽'s U. L. ° ′	Sextant used.	Error of Sextant. ′ ″	Barom.	Therm. °	Observers	Latitude in. ° ′ ″	Longitude deduced. ° ′ ″	Phenomena and Remarks.
♀ April 3.	8 30 59	7 50 57	58 51 18	50 28	42 52	R. 2	0 0	30,00	48	C	49 36 5 N	234 0 15	☽ à Regulus.
	8 30 59	7 50 57	58 51 28	50 28	42 52	B.	0 0			K		233 56 15	Do.
	8 42 55	8 3 7	53 46 22	51 13	44 38	R. 4	—2 39			C		233 32 45	Do.
	8 42 55	8 3 7	58 44 50	51 13	44 33	R. 3	—0 13			K		233 52 45	Do.
	8 49 39	8 9 34	58 41 12	51 36	45 35	R. 3	—1 13			C		233 53 0	Do.
	8 49 39	8 9 34	58 43 6	51 36	45 35	B.	—2 39			K		233 34 30	Do.
♄ — 4.	1 1 54	0 19 29	84 10 7	45 52	67 8	B.	+0 20	29,93	63	C		233 25 45	☽ à Sun.
	1 1 54	0 19 29	84 10 12	45 52	67 8	R. 1	+0 16			K		233 25 45	Do.
	1 6 55	0 24 25	84 13 7	45 40	66 62	R. 1	+0 16			C		233 13 0	Do.
	1 6 55	0 24 25	84 12 47	45 40	66 62	B.	+0 20			K		233 23 0	Do.
				Z. D ☉ & ✱									
	1 23 31	0 40 58	84 21 52	45 4	63 49	D.	—0 10			C		233 18 45	Do.
	1 23 31	0 40 58	84 22 42	45 4	63 49	R. 2	—0 41			K		233 0 0	Do.
	1 27 13	0 44 29	84 25 30	44 50	63 14	R. 2	—0 41			C		232 54 45	Do.
	1 27 13	0 44 29	84 24 37	44 50	63 14	D.	—0 10			K		232 52 45	Do.
	1 43 2	1 0 26	84 35 2	44 10	60 45	R. 4	—2 18			C		232 43 30	Do.
	1 43 2	1 0 26	84 31 45	44 10	60 45	R. 2	—0 13			K		233 3 15	Do.
	7 54 36	7 11 4	44 57 15	43 9	60 10	D.	—0 10	30,02	51	C		233 33 30	☽ à Regulus.
	7 54 36	7 11 4	44 58 0	43 9	60 10	R. 2	—0 41			K		233 44 0	Do.
				Z. D. of ✱	☽'s Alt. U. L.								
	8 0 7	7 17 4	44 55 57	42 31	59 30	R. 2	—0 41			C		233 52 45	Do.
	8 0 7	7 17 4	44 54 55	42 31	59 30	D.	—0 10			K		233 39 15	Do.
	8 11 7	7 27 32	44 48 20	41 27	58 22	B.	+0 53			C		233 10 45	Do.
	8 11 7	7 27 32	44 49 37	41 27	58 22	R. 1	+0 16			K		233 28 30	Do.
	8 19 0	7 35 24	44 47 15	40 13	57 32	R. 1	+0 16			C		233 51 45	Do.
	8 19 0	7 35 24	44 45 35	40 13	57 32	B.	+0 53			K		233 25 45	Do.
	8 29 1	7 45 22	44 44 37	39 51	56 30	R. 4	—2 18			C		233 34 0	Do.
	8 29 1	7 45 22	44 40 52	39 51	56 30	R. 3	—0 13			K		232 50 45	Do.
	8 35 27	7 51 47	44 38 42	39 20	55 50	R. 3	—0 13			C		233 15 0	Do.
	8 35 27	7 51 47	44 42 0	39 20	55 50	R. 4	—2 18			K		233 46 15	Do.
				☉'s Alt.	Z. D. ☽ U. L								
☉ — 5.	1 28 59	0 42 51	97 13 42	45 50	72 44	B.	+0 45	30,04	62	C		233 12 15	☽ à Sun.
	1 28 59	0 42 51	97 15 22	45 50	72 44	R. 2	—0 40			K		233 9 15	Do.
	1 33 19	0 47 16	97 17 30	45 34	72 2	R. 2	—0 40			C		233 17 15	Do.
	1 33 19	0 47 16	97 16 0	45 34	72 2	B.	+0 45			K		233 20 15	Do.
	1 48 20	1 2 10	97 23 52	44 35	69 55	D.	—0 10			C		233 38 30	Do.
	1 48 20	1 2 10	97 23 37	44 35	69 55	R. 1	+0 16			K		233 31 0	Do.
	1 51 23	1 5 26	97 26 25	44 18	69 28	R. 1	+0 16			C		233 4 30	Do.
	1 51 23	1 5 26	97 26 17	44 18	69 28	D.	—0 10			K		233 31 0	Do.
	2 6 47	1 20 35	97 37 18	43 20	67 6	R. 4	—2 18			C		232 43 15	Do.
	2 6 47	1 20 35	97 33 37	43 20	67 6	R. 3	—0 13			K		233 49 0	Do.
	2 10 9	1 23 56	97 35 50	43 4	66 35	R. 3	—0 13			C		233 14 0	Do.
	2 10 9	1 23 56	97 38 37	43 4	66 35	R. 4	—2 13			K		232 47 30	Do.
				Z.D. ☉'s L.L.	Alt. ☽ Center								
♄ — 18.	8 15 11	18 39 1	105 30 20	75 30	13 3	B.	+1 30	30,00	45	C		233 38 0	Do.
	8 15 11	18 39 1	105 31 12	75 30	13 3	R. 1	+0 30			K		233 31 0	Do.
	8 19 1	18 42 54	105 30 20	74 53	12 48	R. 1	+0 30			C		233 45 30	Do.
	8 19 1	18 42 54	105 29 17	74 53	12 48	B.	+1 30			K		233 44 0	Do.
	8 24 21	18 48 13	105 28 30	74 1	12 27	D.	—1 0			C		232 55 0	Do.
	8 24 21	18 48 13	105 28 45	74 1	12 27	R. 2	—0 5			K		233 12 0	Do.
♂ — 21.	8 14 47	18 27 39	71 7 35	76 32	19 22	B.	+1 7	30,00	52	C		233 27 45	Do.
	8 14 47	18 27 39	71 6 57	76 32	19 22	R. 1	+1 0			K		233 5 45	Do.
	8 18 15	18 31 8	71 5 52	75 54	19 33	R. 1	+1 0			C		233 14 30	Do.
	8 18 15	18 31 8	71 4 57	75 54	19 33	B.	+1 7			K		233 20 30	Do.
	8 27 39	18 40 42	71 3 52	74 28	20 0	D.	—0 15			C		233 12 15	Do.
	8 27 39	18 40 42	71 3 57	74 28	20 0	R. 2	0 0			K		233 22 15	Do.
	8 31 20	18 44 11	71 2 47	73 52	20 8	R. 2	0 0			C		233 24 45	Do.
	8 31 20	18 44 11	71 2 32	73 52	20 8	D.	—0 15			K		233 7 30	Do.
	8 37 47	18 50 38	71 2 2	72 51	20 21	R. 4	—2 22			C		232 54 15	Do.
	8 37 47	18 50 38	71 0 55	72 51	20 21	R. 3	—0 55			K		233 5 45	Do.
	8 42 15	18 55 5	70 59 7	72 36	20 32	R. 3	—0 55			C		232 57 45	Do.
	8 42 15	18 55 5	71 1 27	72 36	20 32	R. 4	—2 22			K		233 25 0	Do.
☿ — 22.	11 16 8	21 25 1	57 48 12	48 36	24 31	B.	+1 15	30,01	66	C		233 16 45	Do.
	11 16 8	21 25 1	57 48 42	48 36	24 31	R. 1	+0 30			K		233 0 0	Do.
	11 20 14	21 28 49	57 47 40	48 5	24 23	R. 1	+0 30			C		233 11 15	Do.
	11 20 14	21 28 49	57 46 57	48 5	24 23	B.	+1 15			K		233 11 15	Do.

Obſervations at King George's Sound continued.

Lunar Obſervations at King George's Sound continued.

1778.	Time per Clock. H. ′ ″	Apparent Time. H. ′ ″	Diſtances obſerved. H. ′ ″	Z. Diſt. of ☉'s L. L. ° ′	Altitude of ☽'s Center. ° ′	Sextant uſed.	Error of Sextant. ′ ″	Barom.	Therm. °	Obſervers	Latitude in ° ′ ″	Longitude deduced. ° ′ ″	Phenomena and Remarks.
☿ — 22.	11 32 18	21 41 2	57 43 55	46 32	23 51	R. 2.	—0 30	30,01	66	C	49 36 5 S	233 9 15	☽ a Sun.
	11 32 18	21 41 2	57 43 57	46 32	23 51	D.	—0 30			K		233 9 15	Do.
	11 36 26	21 45 9	57 42 37	46 2	23 39	D.	—0 30			C		233 11 45	Do.
	11 36 26	21 45 9	57 42 35	46 2	23 39	R. 2.	—0 30			K		233 9 0	Do.
	11 56 22	22 4 41	57 37 50	43 44	22 34	R. 4.	—3 0			C		233 29 45	Do.
	11 56 22	22 4 41	57 34 7	43 44	22 34	R. 3	0 0			K		233 9 45	Do.
	12 0 11	22 8 50	57 33 32	43 19	22 19	R. 3	0 0			C		232 54 0	Do.
	12 0 11	22 8 50	57 35 35	43 19	22 19	R. 4	—3 0			K		233 0 0	Do.

A mean of theſe 91 reſults gives the longitude =233° 10′ 24″ Eaſt. Captain Cooke remarks that by taking a mean of 20 reſults obſerved at ſea (before we made the Sound) and reduced to it, by allowing the rate of the Watch N° 1. =5″,6 weſtward, gives 233° 26′ 18″; and 24 reſults of obſervations taken after we left the Sound, gives 233° 7′ 12″ E. a mean of the whole is 233° 17′ 18″ E. the longitude, or 126° 42′ 4″ W.

Meridian Zenith Diſtances.

1778.	Obſerved Zenith Diſtances ☉'s U. L. ° ′ ″	Zenith Diſtance correct. ° ′ ″	Declination. ° ′ ″	Latitude deduced. ° ′ ″	Barom.	Therm. °	N° of Obſervations.	Phenomena and Remarks.
♃ April 2.	44 28 40	44 46 32	4 49 31 N	49 36 3 N	30,10	58	1	Sun.
♀ — 3.	44 5 40	44 23 31	5 12 33	49 36 4	30,09	62	1	Do.
☉ — 5.	43 19 30	43 37 25	5 58 18	49 35 43	30,06	60	1	Do.
♂ — 7.	42 34 32	42 52 25	6 43 40	49 36 5	30,10	58	1	Do.
These Stars were obſerved between the 1ſt and 3d.	36 31 50	36 33 52	13 2 31	49 36 23	30,10	49	3	Regulus.
	28 37 10	28 38 41	20 57 23	49 36 4			2	γ } Leo.
	32 56 10	32 57 47	16 38 20	49 36 7			2	θ } Leo.
	33 45 55	33 47 33	15 40 39	49 36 12			1	θ } Leo.
	59 33 22	59 35 58	9 59 44 S	49 36 14		48	3	Spica Virginis.
3.	13 19 14	13 20 27	62 56 46 N	49 36 19			3	α } Urſa Majoris.
	8 38 45	8 39 53	58 16 0	49 36 7			2	ϑ } Urſa Majoris.

Correction of the line of collimation + 1′ or to be added to the Zenith diſtances.
A mean is =49° 36′ 5″ the latitude South.

Eclipſes of Jupiter's Satellites.

1778.	Time by the Watch. H. ′ ″	Apparent Time. H. ′ ″	
April 16.	14 15 40	12 47 44	Em. 2d Sat. of ♃ obſerved with a Dollond's 3½ feet, magnif. 150 times.
17.	11 8 40	9 33 58	Em. 1ſt Sat. Capt. Cooke with a 3½ feet by Dollond, magnifying 150 times.
	11 9 30	9 34 48	Mr. King with a 2 feet Gregorian by Bird, magnif. 90 times.

At the time of the above obſervations the air was very clear.

Obſervations at King George's Sound continued.

Azimuths obſerved at King George's Sound by Captain Cooke.

1778.	Zen. Diſt. of the Sun's L. L.	Azimuths of the Sun.	Names of the Makers of the Compaſſes.		Variation deduced.	Means.	Phenomena and Remarks.
	° ′ ″	° ′			° ′ ″	° ′ ″	
♀ April 3.	78 25 0	S 78 15 E	Gregory N° 1.	½ round	17 12 40	17 12 56½	Sun.
	78 6 20	78 37			17 13 13		
	77 1 40	80 55	Do. N° 2.	½ round	16 7 46	15 56 53	Do.
	76 41 40	81 42			15 46 0		
	75 41 0	83 29	Knight N° 2.	½ round	15 13 30	15 23 7½	Mean = 16° 3′ 39″ E. Sun.
	75 25 40	83 30			15 32 45		
	74 27 0	84 39	Martin.	½ round	15 41 35	15 41 40	Do.
	74 3 44	86 1			15 41 45		
♄ — 4.	Z. D. ⊙'s L. L.						
	66 30 0	S 54 10½ W	Gregory N° 1.	½ round	15 47 50	15 38 20	Do.
	68 0 0	56 32½			15 28 50		
	69 30 0	58 57½	Do. N° 2.	½ round	15 5 10	15 4 50	Do
	71 0 0	58 57½			15 4 30		
	71 49 44	61 2⅔	Knight N° 2.	½ round	16 22 10	15 22 2	Do.
	72 23 40	63 44⅔			14 21 54		
	73 16 0	64 5	Martin.	½ round	15 10 28	15 35 5	Mean 15° 41′ 2″ E. Sun.
	73 58 10	64 16			15 59 42		
	74 41 20	65 27½	Knight N° 2.	½ round	15 31 26	15 5 43	Do.
	75 4 12	66 47			14 40 0		
	Z. D. ⊙'s U. L.						
	77 42 15	S 74 38 E	Gregory N° 1.	½ round	20 20 25	20 2 57	Do.
	77 18 0	75 42½			19 45 30		
	76 49 45	76 17½	Do. N° 2.	½ round	19 44 50	19 44 55	Do.
	76 31 0	76 40			19 45 0		
	76 4 30	77 23	Knight N° 2.	½ round	19 34 0	20 2 5	Mean 19° 50′ 49″ E. Sun.
	75 47 45	76 47½			20 30 10		
	75 18 30	78 26	Martin.	½ round	19 27 0	19 33 17	Do.
	74 49 45	78 58⅔			19 39 35		
♀ — 17.	51 41 15	S 35 26½ W	Gregory N° 2.	½ round	20 12 5	19 55 12	Do.
	51 59 15	36 35			19 38 20		
	52 29 15	37 16	Do. N° 1.	½ round	19 34 5	19 37 5	Do.
	52 37 30	37 46			19 40 5		
	53 20 0	39 35	Knight N° 2.	½ round	19 19 40	19 16 20	Mean 19° 38′ 46″ E. Sun.
	53 43 45	40 15			19 13 0		
	54 8 0	40 46	Martin.	½ round	19 25 5	19 46 27	Do.
	54 25 45	40 32½			20 7 50		

A mean of all the above means = 17° 48′ 34″ E. the variation.

Obſervations at King George's Sound continued.

Obſervations of Zenith Diſtances of the Sun and Stars.

1778.	Zenith Diſtances obſerved.	Barom.	Therm.	Latitude deduced.	Phenomena and Remarks.	
	° ′ ″	°	°	° ′ ″		
♃ April 2.	44 28 40	29,81	54	49 35 1,0 N	Sun.	
♀ —— 3.	44 5 52	29,75	59	35 10,3	Do.	
♄ —— 4.	43 43 0	29,47	65	35 19,0	Do.	Mean 49° 35′ 11″, 3 North.
☉ —— 5.	43 20 0	29,62	58	35 9,4	Do.	
☉ —— 19.	38 14 19	29,60	50	35 17,0	Do.	
	Stars South of the Zenith.					
♄ —— 4.	43 47 30	29,96	49	49 35 15,0	Procyon.	
	21 2 0	Do.		35 17,0	Pollux.	
	39 43 20			35 25,0	β	
	28 23 30			35 12,0	η Cancri.	Mean 49° 35′ 10″, 5 North.
	36 52 15			35 0,0	α	
	38 1 20			34 54,3	κ	
	36 31 40			35 0,0	Rigel.	
	Stars North of the Zenith.					
♄ —— 4.	7 57 0			49 37 2	β	
	13 20 0	29,96	49	49 36 48	α Urſæ major.	
	5 18 40			37 6	γ	Mean 49° 37′ 0″, 0 North.
☉ —— 19.	7 57 10			36 51	β	
	13 19 30	29,64	42	37 8	α Urſæ major.	
	5 18 40			37 5	γ	

From the above the correction of the line of collimation is 54″⅓, and the mean latitude 49° 36′ 5″,4 North.

Note, I always examined the line of collimation of the Quadrant by means of a diſtant object, and made it apparently correct; but the celeſtial obſervations conſtantly gave its correction to be near a minute.

Dips of the North Pole of the Needle obſerved by Captain Cooke.

Mark end North. E.	Mark end North. W.	Mark end South. E.	Mark end South. W.	Means.	
° ′	° ′	° ′	° ′	° ′ ″	
72 40¼	70 12½	71 30	72 1[illegible]¾	71 40 22½	Balanced Needle on board.
71 47½	72 20	72 48¾	71 [illegible]¾	72 0 0	Balanced Needle on ſhore.
73 29¼	72 2½	72 15	72 50	72 49 15	Unbalanced Needle on ſhore.
72 50	73 0	73 45	73 1[illegible]	73 11 45	Balanced Needle on board.
73 5	70 51⅓	71 55	72 37⅓	72 7 15	Balanced Needle on ſhore.
74 12⅓	72 45	73 0	72 26⅔	73 11 0	Unbalanced Needle on board.

A mean of all 72° 29′ 56″ the dip.

Obſervations at King George's Sound continued.

Equal Altitudes obſerved at King George's Sound for the Going of the Clock N° 2.

1778.	Time of Noon per Clock uncorrect.	Half Interval of Obſervations.	Time at Noon per Clock correct.	Clock flow for Sidereal Time.	Daily Rat of Clock.	N° of Obſervations.	Phenomena and Remarks.
	H. ′ ″	H. ′ ″	H. ′ ″	′ ″	′ ″		
♃ April 2.	0 35 36,1	2 25 14	0 35 17,20	9 33,9	Loſing.	15	Sun.
♀ — 3.	0 39 12,8	4 12 7	0 38 52,20	9 37,2	3,30	13	Do.
♄ — 4.	0 42 45,8	4 1 36	0 42 25,93	9 41,9	4,70	15	Do.
☉ — 5.	0 46 20,0	4 8 48	0 45 57,77	9 46,5	4,60	20	Do.
☿ — 17.	1 29,32,7	5 0 1	1 29 12,10	10 34,57	4,00	33	Do. Pendulum vibr. 1° 36′ at a medium.
	1 29 31,2	4 22 45	1 29 12,56				
☉ — 19.	1 36 47,6	4 35 7	1 36 28,87	10 42,83	4,13	21	Do.
☽ — 20.	1 40 25,4	3 57 0	1 40 8,47	10 46,23	3,40	17	Do.
♂ — 22.	1 47 43,9	4 15 3	1 47 26,73	10 55,37	4,07	18	Do.
♃ — 23.	1 51 25,5	4 37 0	1 51 7,45	10 59,00	3,63	14	Do.

Computation of the Rate of the Going of the Watch N° 2.

1778.	Time per Watch at Comparison.	Time per Clock at Comparison.	Watch flow for Clock.	Clock gains on Watch per Day.	Interval of Comparisons	Clock gains on Watch in 24 hours.	Clock loſes on Sidereal Time.	Watch loſes on Sidereal Time.	Watch loſing on Mean Time.
	H. ′	H. ′ ″	H. ′ ″	′ ″	H. ′	′ ″	″	′ ″	″
♃ April 2.	6 55	0 48 1	17 53 1						
3.	6 43	0 39 55½	17 56 55½	3 54½	23 48	3 56,60	3,30	3 59,90	— 3,40
4.	6 46	0 47 0	18 1 0	4 4½	24 3	4 0,0	4,70	4 8,70	—12,20
5.	6 43	0 48 0	18 5 0	4 0	23 57	4 0,50	4,60	4 5,10	8,60
6.	6 37	0 46 1	18 9 1	4 1	23 54	4 2,01	4,0	4 6,01	9,51
7.	6 44	0 57 6	18 13 6	4 5	24 7	4 3,83	4,0	4 7,83	11,33
8.	6 53	1 10 10	18 17 10	4 4	24 9	4 2,48	4,0	4 6,48	9,98
9.	6 42	1 3 12	18 21 12	4 2	23 49	4 3,84	4,0	4 7,84	11,34
10.	6 41	1 6 15	18 25 15	4 3	23 59	4 3,16	4,0	4 7,16	10,66
11.	6 31	1 0 16	18 29 16	4 1	23 50	4 2,68	4,0	4 6,68	10,18
12.	6 35	1 8 19½	18 33 19½	4 3½	24 4	4 2,83	4,0	4 6,83	10,33
13.	6 49	1 24 25	18 37 25	4 5½	24 14	4 3,15	4,0	4 7,15	10,65
14.	6 30	1 11 24	18 41 24	3 59	23 41	4 2,20	4,0	4 6,20	9,70
15.	6 35	1 20 26½	18 45 26½	4 2½	24 5	4 1,65	4,0	4 5,65	9,15
16.	6 41	1 30 29	18 49 29	4 2½	24 6	4 1,49	4,0	4 5,49	8,99
17.	6 38	1 31 30½	18 53 30½	4 1½	23 57	4 2,00	4,0	4 6,00	9,50
18.	6 35	1 32 32	18 57 32	4 1½	23 57	4 2,00	4,13	4 6,13	9,63
19.	6 40	1 41 34	19 1 34	4 2	24 5	4 1,15	4,13	4 5,28	8,78
20.	6 40	1 45 35	19 4 35	4 1	24 0	4 1,0	3,40	4 4,40	7,90
21.	6 44	1 53 36	19 9 36	4 1	24 4	4 0,33	3,40	4 3,40	6,90
22.	6 44	1 57 36	19 13 36	4 0	24 0	4 0,0	4,07	4 4,70	7,57
23.	6 41	1 58 35	19 17 35	3 59	23 57	3 59 50	3,63	4 3,13	6,63

The mean rate of the Watch N° 2.=9″,187 per day loſing on mean time.
It was 17ʰ 24′ 41″,15 too flow for mean time at K. George's Sound on the 23d of April at noon.

Obſervations at King George's Sound continued.

Lunar Obſervations at King George's Sound.

1778.	Time per Clock.	Apparent Time.	Diſtance obſerved.	Z. Diſt. of ☉ and ✱ ☉'s U.L.	Z. Diſt. the ☽'s U. L.	Sextant uſed.	Error of Sextant.	Barom.	Therm.	Obſerver.	Latitude in.	Longitude deduced.	Phenomena and Remarks.
	H. ′ ″	H. ′ ″	° ′ ″	° ′	° ′		′ ″		°		° ′ ″	° ′ ″	
♃ April 2.	2 58 27,3	2 22 49,4	58 27 22	53 38	34 47½	D.	0 0	29,76	42	B	49 36 5 N	233 7 36 E	☽ à Sun.
	3 6 31,0	2 30 51,5	58 30 41,6	54 35	33 57½	R.						233 6 0	Do.
♀ — 3.	0 52 34,1	0 13 40,0	70 57 16,0	44 13	59 30½	D.		29,75	59			233 25 45	Do.
	1 2 21,0	0 23 25,0	71 2 31,0	44 18	57 58½	R.						233 17 45	Do.
	3 6 12,5	2 26 58,8	71 57 13,0	53 26	39 19⅔	R.		29,76	61			233 36 42	Do.
	3 14 26,5	2 35 12,3	72 2 41,6	54 2	38 12	D.						233 8 49	Do.
	3 29 42,6	2 50 25,0	72 7 58,3	56 39	36 15	S.						233 18 7½	Do.
	8 7 42,5	7 27 44,0	59 1 33	41 29	39 36	D.						233 42 7½	☽ à Regulus.
	8 19 2,6	7 39 3,0	58 55 25	40 31	41 19	R.						233 21 37½	Do.
♄ — 4.	1 6 17,5	0 23 48,2	84 12 17	44 8	66 30	R.		30,00	64			233 34 15	☽ à Sun.
	1 14 28,0	0 31 57,7	84 17 20	44 17	65 14	D.						233 11 25	Do.
	3 30 21,6	0 47 31,0	85 19 56	56 3	44 12	R.						233 3 0	Do.
	3 43 53,0	3 1 0,4	85 26 23	57 51	42 13½	D						232 56 6	Do.
	3 50 34,5	3 7 41,5	85 27 45	58 40	41 15½	R. 2						233 36 15	Do.
☉ — 5.	2 59 36,5	2 13 17,1	97 58 37,5	51 36	58 56	R.		29,97	59			233 20 46	Do.
	3 10 25,3	2 24 4,2	98 4 21,0	52 45	57 14½	D.						233 4 33	Do.
	3 18 9,0	2 31 47,0	98 7 0,0	53 41	56 0	R. 2						233 28 22	Do.
☉ — 19.	19 53 58,5	18 18 21,5	105 38 25	78 18	95 1	D.		29,61	41			233 57 15	Do.
	20 4 22,5	18 28 43,7	105 33 45	76 39	76 4½	R. 1						233 16 15	Do.
♂ — 21.	19 59 21,5	18 12 48,0	71 15 21,6	78 42	71 11½	R. 2		29,61	44½			233 41 0	Do.
	20 8 28,1	18 21 53,5	71 10 56,0	77 29	70 40	D.						233 54 37½	Do.
	20 16 28,6	18 29 52,3	71 7 58,0	75 42	70 15½	R. 1						233 30 49	Do.
	20 50 7,6	19 3 26,6	70 58 32,5	70 17	69 1	R. 2						233 39 30	Do.
	20 57 2,3	19 10 19,8	70 53 57,5	69 10	68 51	D.						233 31 57	Do.
	21 4 9,3	19 17 24,7	70 51 33,3	68 2	68 41	R. 1						233 34 25	Do.
☿ — 22.	20 23 59,0	18 33 42,0	58 54 0,0	74 50	69 22	R. 2		29,70	54			233 27 45	Do.
	20 36 37,3	18 46 18,5	58 49 1	72 48	68 40	R. 1						233 16 37	Do.
	20 44 30,6	18 54 10,4	58 46 5	71 31	67 50	D.						233 21 51	Do.
	21 41 44,0	19 51 12,7	58 27 16	62 24	64 59	R. 2						233 56 10	Do.
	21 48 5,0	19 57 33,9	58 22 17½	61 13	64 49	D.						233 10 13	Do.
	21 54 39,5	20 4 8,1	58 20 57	60 22	64 39	R. 1						233 19 16	Do.

A mean of theſe 31 reſults, viz. 17 on the weſt ſide, and 14 on the eaſt ſide of the Moon, gives the longitude of King George's Sound =233° 19′ 30″ Eaſt, or 126° 40′ 30″ Weſt.

♃ April 16. At 12ʰ 47′ 28″ apparent time obſerved an emerſion of the 2d Satellite of Jupiter. The Teleſcope uſed was a Dollond's 3½ feet Achromatic, magnifying 150 times. At the time of obſervation a very heavy dew fell, ſo as to cover the object glaſs, and render Jupiter indiſtinct in a minute or two, which obliged me to wipe the glaſs frequently, in conſequence the obſervation was dubious to near 20 ſeconds.

♄ — 18. Obſerved an emerſion of the 1ſt Satellite of Jupiter at 9ʰ 34′ 35″,5 apparent time. By comparing it with the time ſet down in the Ephemeris gives 233° 13′ 15″ the longitude Eaſt.

At the time of obſervation the air was clear. I uſed a Dollond's 3½ feet Teleſcope, magnifying 150 times.

Azimuths obſerved at King George's Sound.

My Obſervatory ſtood on a ſmall rock that was ſurrounded by the ſea at high water. I obſerved a great number of Azimuths, a mean of the reſults gave 16° 4′ for the variation Eaſt, which is near three degrees leſs than that deduced from obſervations taken on board the ſhip. The dipping Needle gave near two degrees more than on board the ſhip, from whence it is probable there was ſome magnetic power of attraction in the rocks.

Obſervations at King George's Sound continued.

I therefore made the following Obſervations at the head of the bay on a ſandy beach, as far from rocks as poſſible. Each line is a mean of ſix.

1778.	Zen. Diſt. ☉'s U. L.	Azimuths obſerved.	Variation deduced.		
	° ′	° ′	° ′		
♄ April 18.	75 35	N 71 23 E	18 43	On board.	
	72 8	75 42	18 28	On ſhore.	
	71 42	S 66 53 W	18 41	On board.	
☽ —— 20.	71 50	N 74 46 E	18 40	On board.	Mean 18° 49′ Eaſt variation.
	68 46	77 44	19 26	On ſhore.	
	72 49	73 40	18 32	On board.	
	67 29	79 45	18 59	On ſhore.	

Dips of the Needle.

Mark End North.		Mark End South,		
° ′ E.	° ′ W.	° ′ E.	° ′ W.	
70 34	72 11	73 46	70 35,4	Mean dip 71° 46′ 36″ the North Pole, bal. Needle on ſhore.
73 59	69 47	71 32	72 41	Do. 71 59 45 plain Needle on ſhore.
71 51,4	73 0,4	74 29	69 54	Do. 72 18 42 plain Needle on board.
73 44	70 55	70 17	73 16	Do. 72 3 0 balanced Needle on board.

A mean on ſhore = 71° 53′ 10″½ } Difference 17′ 42″.
A mean on board = 72 10. 52 }

From conſtant obſervations found the tides very regular. It was high water at 0ʰ 20′ apparent time on the full and change days. The water roſe 8 feet 7 inches perpendicular at greateſt: and it roſe 7 feet 3 inches at the quadratures. The water ebbed out much lower at the time of the quadratures than at full and change, which is contrary to what is generally the caſe.

Obſervations at the Iſland of Oonalaſtchka in Samgonooda Harbour.

Equal Altitudes.

1778.	Time of Noon per Watch N° 2. uncorrect.	Half Interval.	Time of mean Noon per Watch, correct.	Watch ſlow for Mean Time.	Daily Rate of Watch.	N° of Obſervations	Phenomena and Remarks.
	H. ′ ″	H. ′ ″	H. ′ ″	H. ′ ″	″		
Oct. 12.	8 38 42,37	3 56 30	8 52 30,87	15 7 29,6	Loſing.	10	Sun.
14.	8 38 2,77	3 41 2	8 52 18,47	15 7 41,5	5,95	15	Do.
17.	8 37 8,37	3 43 56	8 52 1,50	15 7 58,5	5,66	8	Do.
19.	8 36 37,40	2 56 42	8 41 52,0	15 8 8,0	4,75	12	Do.

Between the 12th and 19th the Watch loſt 38″,67, or at the rate of 5″,524 per day on mean time.

Obſervations at Samgonooda continued.

Meridian Zenith Diſtances of the Sun.

1778.	Zenith Diſtance of the ☉'s U. L.	Declination.	Latitude deduced.	Barom.	Therm.	Phenomena and Remarks.
	° ′ ″	° ′ ″	° ′ ″		°	
Oct. 21.	60 11 4	6 34 53	53 53 54	29,34	43	Sun.
10.	60 56 47½	7 20 8	53 54 17	29,80	40	Do.
13.	61 19 35	7 42 52	53 54 18	30,10	45	Do.
16.	62 26 17	8 49 49	53 54 15	29,60	45	Do.
19.	63 32 8	9 55 47	53 54 17	29,70	46	Do.

A mean of theſe is = 53° 54′ 12″ N.
Correction —— + 54 of the line of collimation.
53 55 6 the true latitude of Samgonooda Harbour.

Lunar Obſervations at Samgonooda Harbour.

1778.	Time by the Watch N° 2.	Apparent Time.	Diſtances obſerved.	Z. Diſt. of the ☉ U. L.	Z. Diſt. of ☽'s Center.	Sextant uſed.	Error of Sextant.	Barom.	Therm.	Obſervers	Latitude. in.	Longitude deduced.	Phenomena and Remarks.
	H. ′ ″	H. ′ ″	° ′ ″	° ′	° ′		′ ″		°		° ′ ″	° ′ ″	
Oct. 10.	5 34 0	20 54 31	119 37 31	71 50½	62 4	D.	−2 10	29,61	42		53 55 6	193 39 45 E	☽ à Sun.
	5 47 33	21 8 4	119 25 20	70 24	63 39	R. 1	+1 45					193 24 30	Do.
	6 26 19	21 46 49	119 10 17	66 39	69 16	D.	−3 10					194 10 30	Do.
	6 34 39	21 55 9,5	118 59 50	65 57	70 23	R. 1	+1 45					193 22 7	Do.
	6 50 20	22 10 50,5	118 51 11	64 43	72 32	S.	+1 45					193 25 22	Do.
11.					Alt. ☽ Ctr.								
	4 55 26	20 16 18,4	106 30 13	76 39	41 39	D.	−3 40	29,80	40			193 59 13	Do.
	5 1 4	20 21 57,0	106 6 53	75 58	40 56	R. 1	+2 5					193 51 13	Do.
	5 16 32	20 37 34,4	106 20 46	74 8	38 48	D.	−3 40					193 51 0	Do.
	5 21 36	20 42 28,9	106 12 38	73 32	38 8	R.	+2 5					193 45 52	Do.
	5 47 44	21 8 36,4	106 6 53	70 40	34 33	D.	−3 40					194 6 30	Do.
	5 53 29	21 14 21,9	105 57 55	70 5	33 46	R. 1	+2 5					193 49 21	Do.
	6 19 18	21 40 10,4	105 51 42	67 36	30 6	D.	−3 40					194 5 51	Do.
12.	6 11 26	21 32 18,7	105 48 52	68 19	31 19	R. 1	+2 5					193 40 3	Do.
	4 31 55	19 53 5,0	93 20 58	79 54	53 1	D.	−3 20	30,00	43			193 54 18	Do.
	4 38 41	19 59 51,0	93 12 56	79 3	52 17	R. 1	+2 10					193 46 15	Do.
	5 6 44	20 27 53,7	93 7 52	75 35	49 0	D.	−3 20					194 1 10	Do.
	5 13 31	20 34 40,7	92 59 4	74 46	48 9	R. 1	+2 10					193 44 55	Do.
	5 37 24	20 58 33,8	92 54 50	72 4	45 3	D.	−3 20					193 58 12	Do.
	5 44 25	21 5 34,7	92 45 45	71 20	44 7	R. 1	+2 10					193 41 18	Do.
	5 50 43	21 11 52,7	92 43 30	70 40	43 22	D.	−3 20					193 44 10	Do.
	5 53 52	21 15 1,7	92 41 3	70 19	42 59	R. 1	+2 10					193 28 48	Do.
13.	4 27 30	19 49 1,8	80 15 38	80 46	57 6	D.	−3 20	30,00	42			194 11 45	Do.
	4 33 47	19 55 19,4	80 7 39	79 56	56 42	R. 1	+2 10					193 54 30	Do.
	4 59 11	20 20 42,8	80 3 47	76 46	54 48	D.	−3 20					193 59 42	Do.
	5 7 0	20 28 31,8	79 54 50	75 50	54 5	R. 1	+2 10					193 43 19	Do.
				✱ s Alt									
	1 29 22	16 51 3,0	52 35 8	47 8	51 51	D.	−2 20	30,10	36½			193 20 0	Do.
	1 35 33	16 57 4,0	52 38 9	46 23	52 25	R. 1	+2 20					192 48 0	Do.

A mean of all the above = 193° 39′ 45″,7, or 166° 20′ 14″,3 Weſt, for the longitude of Samgonooda.

Dips of the North End of the Magnetic Needle.

Mark End North. E.	Mark End North. W.	Mark End South. E.	Mark End South. W.	Means.	
° ′ ″	° ′ ″	° ′	° ′	° ′ ″	
68 33 0	69 34 24	72 6	66 32	69 11 21	On board the ſhip.
68 30 36	69 35 0	71 58	66 30	69 8 24	On ſhore.

The variation obſerved was 20° 45′ Eaſt.

Obſervations at Samgonooda continued.

During the time we were at Samgonooda the weather was cloudy and wet in general, blowing very ſtrong at times from S. E. to W. S. W. which cauſed the tides to be very irregular; the time of high water varying 3¼ hours in two following days, which ſeemed owing to a ſhift of wind. The flood came from the S. S. W. or S. W. by S. On the full and change days, it was high water at 2ʰ 30′ apparent time. The water roſe and fell from 2 feet 4 inches to 4 feet 2 inches, but this was not regular; a S. W. wind cauſed the higheſt tide. As far as I was able to judge from appearances, the water roſe 3 feet 7 or 8 inches at moſt, when unaffected by the wind. I alſo found both here, and all up the coaſt of America, to the North of theſe iſlands, there was only one tide in 24 hours. W. B.

Equal Altitudes by Captain Cooke and Lieutenant King, for the Going of the Watch N° 1.

1778.	Time of Noon per Watch N° 1. uncorrect.	Half Interval.	Time of Noon per Watch N° 1. correct.	Watch ſlow for Mean Time.	Daily Rate of Watch	N° of Obſervations	Phenomena and Remarks.
	H. ′ ″	H. ′ ″	H. ′ ″	H. ′ ″	″		
☽ Oct. 12.	10 0 40,5	3 59 42	10 1 5,6	13 45 31,29	Loſing. 8,07	24	Sun.
☿ —— 14.	9 59 56,3	3 42 59	10 0 20,8	13 45 47,44	8,04	14	Do.
♄ —— 17.	9 58 54,4	3 45 22	9 59 18,7	13 46 11,57	8,12	7	Do.
☿ —— 21.	9 57 40,7	3 30 21	9 58 4,2	13 46 44,06		26	Do.

Mean rate = 8″,08 per day, loſing on mean time.

Compariſons of the Watches.

1778.	Time per Watch N° 1.	Time per Watch N° 2.
	° ′ ″	H. ′
Oct. 12.	14 34 57¼	13 13
14.	10 5 53¼	8 44
16.	10 12 47¾	8 51
17.	9 49 48	8 58
19.	10 5 44¼	8 44

Obſerved Zenith Diſtances for the latitude.

1778.	Zen. Diſtance obſerved, ☉'s U. L.	Zen. Diſtance of the Center, correct.	Latitude deduced.	Barom.	Therm.
	° ′ ″	° ′ ″	° ′ ″		°
♄ Oct. 10.	60 43 15	60 29 50	53 55 3	29,36	52
☽ —— 12.	60 56 15	61 15 4	53 54 51	29,81	48
♂ —— 13.	61 18 48	61 37 39	53 54 52	30,05	54
☽ —— 19.	63 31 15	63 50 17	53 54 31	30,16	54
☿ —— 21.	64 14 30	64 33 37	53 54 36	30,50	49

Mean latitude = 53° 54′ 47″ North.
Corr. of the line of collimation allowed + 1′ min.

Lunar Obſervations by Captain Cooke and Lieutenant King.

1778.	Time per Watch N° 2.	Apparent Time.	Diſtances obſerved.	Altitude of ☉'s Center.	Alt. of the ☽'s Center.	Sextant uſed.	Error of Sextant.	Barom.	Therm.	Obſervers	Latitude in.	Longitude deduced.	Phenomena and Remarks.
	H. ′ ″	H. ′ ″	° ′ ″	° ′	° ′		′ ″		°		° ′ ″	° ′ ″	
♂ June 30.	16 1 41	5 28 0	72 52 55	23 14	43 38	B.	+1 30			C	53 54 47	192 41 45 E.	☽ à Sun.
	16 1 41	5 28 0	72 52 45	23 14	43 38	R. 1	+0 45	30,07	57	K		193 24 15	Do.
	16 5 38	5 31 57	72 54 7	22 40	43 35	R. 1	+0 45			C		193 10 15	Do.
	16 5 38	5 31 57	72 53 55	22 40	43 35	B.	+1 30			K		192 52 45	Do.
	16 22 2	5 48 21	73 3 10	20 17	43 7	R. 4	−2 10			C		193 5 0	Do.
	16 22 2	5 48 21	73 1 0	20 17	43 7	D.	−1 0			K		193 20 0	Do.
	16 25 28	5 51 47	73 2 50	19 47	43 0	D.	−1 0			C		193 48 0	Do.
	16 25 28	5 51 47	73 3 45	19 47	43 0	R. 4	−2 10			K		193 25 30	Do.

Obſervations at Samgonooda continued.

Lunar Obſervations by Captain Cooke and Lieutenant King continued.

1778.	Time per Watch N° 1.	Apparent Time.	Diſtances obſerved.	Zen. Diſtance of the ☉'s U. L.	Alt. of the ☽'s Center.	Sextant uſed.	Error of Sextant.	Barom.	Therm.	Obſervers	Latitude in.	Longitude. deduced.	Phenomena and Remarks.
	H. ′ ″	H. ′ ″	° ′ ″	° ′	° ′		′ ″		°		° ′ ″	° ′ ″	
☉ Oct. 11.	6 31 36	20 30 25	106 21 38	74 54	40 40	R. 1	—0 30	29,64	42	C	53 54 47	194 11 0 E	☽ à Sun.
	6 31 36	20 30 25	106 20 37	74 54	40 40	D.	—1 0			K		193 30 15	Do.
	6 37 42	20 36 31	106 19 17	74 10	39 48	D.	—1 0			C		194 23 15	Do.
	6 37 42	20 36 31	106 18 5	74 10	39 48	R. 1	—0 30			K		193 54 30	Do.
	6 45 23	20 44 12	106 15 5	73 19	38 41	R. 1	—0 30			C		194 7 30	Do.
	6 45 23	20 44 12	106 14 35	73 19	38 41	D.	—1 0			K		193 40 15	Do.
	6 49 1	20 47 51	106 13 55	72 54	38 10	D.	—1 0			C		194 3 0	Do.
	6 49 1	20 47 51	106 13 10	72 54	38 10	R. 1	—0 30			K		193 56 0	Do.
☿ —— 12.	7 37 12	21 36 25	92 35 49	68 16	40 0	D.	—1 0	29,81	44	C		193 59 30	Do.
	7 37 12	21 36 25	92 35 19	68 16	40 0	R. 1	—0 30			K		193 59 30	Do.
	7 45 16	21 44 29	92 30 47	67 33	38 55	R. 1	—0 30			C		193 37 0	Do.
	7 45 16	21 44 29	92 31 5	67 33	38 55	D.	—1 0			K		193 30 53	Do.
	8 11 29	22 10 43	92 19 22	65 26	35 13	D.	—1 0			C		193 12 15	Do.
	8 11 29	22 10 43	92 17 47	65 26	35 13	R. 1	—0 30			K		193 56 0	Do.
				L.D. ☉U.L	Alt. ☽ Ctr.								
	8 17 28	22 16 42	92 23 52	65 1	34 23	R. 3	+1 0	29,81	44	C		193 30 15	Do.
	8 17 28	22 16 42	92 17 52	65 1	34 23	B.	—2 15			K		193 51 10	Do.
	8 33 42	22 32 56	92 5 12	63 57	32 5	R. 4	+0 45			C		193 4 15	Do.
	8 33 42	22 32 56	92 8 25	63 57	32 5	C.	—0 45	29,82	45	K		193 52 15	Do.
	8 37 35	22 36 49	92 6 27	63 44	31 30	C.	—0 45			C		193 50 0	Do.
	8 37 35	22 36 49	92 4 50	63 44	31 30	R. 4	+0 45			K		193 46 0	Do.
☽ —— 13.				Alt. of ✱.									
	2 30 13	16 49 45	52 32 25	47 16	51 47	R. 1	—0 30	30,05	35	K		193 6 45	☽ à Aldebaran.
	2 57 19	16 56 51	52 35 42	46 37	52 22	D.	—1 0			K		193 17 45	Do.
	3 11 7	17 10 39	52 43 15	45 16	54 0	B.	—2 25			K		192 55 0	Do.
	3 16 2	17 15 34	52 43 15	44 45	54 51	R. 4	+0 45			K		192 46 0	Do.
	3 39 59	17 39 32	52 52 52	42 5	56 10	R 3	+1 0			K		193 7 45	Do.
	3 49 14	17 48 47	55 56 55	41 0	56 50	C.	—0 45			K		193 52 15	Do.

A mean of the above 34 results gives 193° 31′ 20″, or 166° 20′ 40″ Weſt, the longitude from Greenwich.

Azimuths obſerved by Captain Cooke.

1778.	Zen. Diſt of the ☉'s Center.	Azimuths obſerved.	Maker of the Compaſs.		Variation deduced.	Mean Variation.	Phenomena and Remarks.
	° ′	° ′			° ′ ″	° ′ ″	
☽ Oct. 11.	81 45	S 86 27½ E	Gregory.	½ round	20 52 30	20 24 45	Sun. } 20° 17′ 10″ E.
	81 0	84 20			19 57 0		
	80 10	82 30	Knight.	½ round	19 28 20	19 40 5	Do.
	79 30	81 47			19 51 30		
	78 40	80 10	Martin.	½ round	19 38 40	20 46 40	Do.
	78 0	81 35			21 54 40		
☿ —— 12.	73 6½	S 29 27½ W	Gregory.	½ round	19 56 50	19 7 2½	Do. } 19° 49′ 4″ E.
	75 9½	34 31¼			18 58 25		
	75 37½	35 5	Knight.	½ round	19 15 40	20 12 5	Do.
	76 40	36 20			20 27 20		
	78 40	40 17½	Martin.	½ round	19 59 10	10 8 5	Do.
	79 30	41 25			20 17 0		

Mean variation 20° 3′ 7″ Eaſt.
Captain Cooke obſerved the dip of the North end of the Needle to be 69° 23′ 30″.

Obſervations made at Keragegooa Bay, on the Iſland of Oeyhee,
By Captain Cooke and Lieutenant King.

Equal Altitudes for the Going of the Watch N° 1.

1779.	Time of Noon per Watch N° 1. uncorrect.	Half Interval.	Time of Noon per Watch correct.	Watch ſlow for Mean Time.	Daily Rate of Watch.	N° of Obſervations	Phenomena and Remarks.
	H. ′ ″	H. ′ ″	H. ′ ″	H. ′ ″	″		
♄ Jan. 19.	9 31 58,8	4 10 39	9 31 53,7	14 39 12,63	Loſing.	23	Sun.
20.	9 32 10,1	4 12 10	9 32 4,9	14 39 18,70	6,07	21	Do.
25.	9 32 53,6	4 36 52	9 32 47,8	14 39 56,16	7,49	12	Do.
26.	9 32 58,9	4 26 49	9 32 53,6	14 40 3,80	7,69	12	Do.
27.	9 33 4,0	3 1 30	9 32 57,8	14 40 11,26	7,41	11	Do.
30.	9 33 15,3	4 3 39	9 33 8,8	14 40 34,16	7,66	16	Do.
Feb. 2.	9 33 13,4	4 15 37	9 33 6,8	14 41 1,13	9,58	18	Do.

Mr. King remarks, that a mean of the above ſix reſults is 7″,65 the daily rate of the Watch loſing per day on mean time: but as the rates ſeem to increaſe gradually, and the Lunar Obſervations made for ſome time after require it to be greater than the above mean, and agree very well with ſuppoſing it as at the laſt days; the true rate is therefore aſſumed at 9″,60 loſing on mean time, to be uſed.

Meridian Zenith Diſtances of the Sun and Stars, by Capt. Cooke and Lieut. King.

1779.	Zenith Diſt. obſerved.	Correct Zenith Diſt.	Declinations.	Latitude deduced.	Phenomena and Remarks.
	° ′ ″	° ′ ″	° ′ ″	° ′ ″	
♃ Jan. 21.	39 9 30	39 27 29	19 59 36,4 S	19 27 52,6 S	Sun.
♀ —— 22.	38 55 56	39 13 55,5	19 46 9,7	19 27 45,8	Do.
♄ —— 30.	36 55 40	37 13 34,8	17 45 45,0	19 27 49,8	Do.
	27 54 45	27 56 15,2	8 28 16,0 S	19 27 53,7	Rigel.
	29 12 0	29 13 31,9	9 45 39,5	19 27 47,0	κ Orion.
	35 51 45	35 53 26,2	16 25 34,7	19 27 47,0	Sirius.
	68 53 45	68 57 11,8	49 29 21,9	19 28 4,9	δ Centaur.
	76 53 45	76 58 46,3	57 31 10,7	19 27 52,9	δ
	81 13 0	81 19 57,4	61 52 27,3	19 27 48,3	α } Crucis.
	75 15 22	75 19 56,1	55 52 23,7	19 27 49,6	γ
	71 43 45	71 47 36,5	52 19 57,7	19 27 55,3	ε
	78 39 50	78 45 29,0	59 17 40,5	19 28 4,7	β } Centaur.
	79 16 30	79 22 24,4	59 55 0,2	19 27 42,6	α
	29 26 15	29 27 47,1	10 0 6,8	19 27 44,3	Spica Virginis.
	35 25 15	35 26 55,5	54 55 22,6 N	19 28 19,4	γ
	36 34 30	36 36 12,3	56 5 3,3	19 28 36,9	ζ } Urſæ Major.
	37 39 30	37 41 14,0	57 9 48,5	19 28 23,6	ε
	55 32 15	55 34 37,8	75 3 36,9	19 28 42,8	β Urſæ Minor.

These ſtars were obſerved on the 30th, 31ſt, and Feb. 1.

The correction of the line of Collimation was found to be +1′.
By a mean of the above 18 reſults the latitude of the Obſervatory is 19° 28′ 0″ S.

Observations at Keragegooa Bay continued.

Lunar Observations by Captain Cooke and Officers.

1779.	Time per Clock.	Apparent Time.	Distances observed	Zen. Dist. ☉ U. L.	Zen. Dist. ☽ U. L.	Sextant used.	Error of Sextant.	Barom.	Therm.	Observer.	Latitude in.	Longitude deduced.	Phenomena and Remarks.
	H. ′ ″	H. ′ ″	° ′ ″	° ′	° ′		′ ″		°		° ′ ″	° ′ ″	
♄ Jan. 23	9 52 59	0 20 24	59 57 15	37 44	33 25	D.	—1 45	30,15	80	K	19 28 0	203 51 15	☽ à Sun.
	9 59 49	0 27 14	59 59 22	36 36	32 9	D.	—1 45			K		203 51 15	Do.
	10 13 21	0 40 46	59 59 20	34 23½	29 55	R. 1	+2 15			K		203 45 45	Do.
	10 20 59	0 48 24	60 1 00	33 8	28 48	R. 1	+2 15			K		204 3 15	Do.
				Alt. ✱	Alt. ☽ L. L.								
	17 43 4	8 10 25	61 18 47	86 00	25 57	D.	—1 45	30,15	77	K		204 23 30	☽ à Aldebaran.
	17 50 4	8 17 25	61 16 17	84 36	24 31	D.	—1 45			K		204 30 30	Do.
	17 58 38	8 25 59	61 7 15	83 11	22 29	R. 1	+2 15			K		204 17 0	Do.
	18 23 46	8 51 15	60 55 32	77 38	16 58	R. 1	+2 15			K		204 29 45	Do.
				Alt. ☉ U.L.	Z.D. ☽ U L								
☽ —25	10 34 38	1 1 43	84 18 0	41 1	51 8¾	D.	—1 15	30,16	80½	C		204 19 0	☽ à Sun.
	10 34 38	1 1 43	84 14 47	41 1	51 8¾	R. 1	+2 15			K		204 3 0	Do.
	10 38 39	1 5 51	84 17 7	40 24	50 9	R. 1	+2 15			C		203 55 30	Do.
	10 38 39	1 5 51	84 20 5	40 24	50 9	D.	—1 15			K		204 11 30	Do.
	10 44 51	1 12 3	84 21 30	39 26	49 3	D.	—1 15			C		204 37 45	Do.
	10 44 51	1 12 3	84 18 15	39 26	49 3	R. 1	+2 15			K		204 27 0	Do.

A mean of the above 14 results is 204° 11′ 51″ E. Long East, or = 155° 48′ 9″ West.

Azimuths observed by Captain Cooke.

1779.	Z. D. ☉'s U. L.	Azimuths.	Maker of the Compasses.		Variation deduced.	Mean by each.	Phenomena and Remarks.
	° ′	° ′			° ′ ″	° ′ ″	
☽ Jan. 25.	73 55¼	S 54 57¼ W	Gregory		7 26 10	7 36 22	7° 31′ 59″ E. Sun.
	74 16½	54 48¾		½ round	7 46 35		
	75 4¾	55 27½	Knight N° 2.		7 34 10	7 9 45	
	75 31	56 30		½ round	6 45 20		
	77 16	56 7½	Martin.		8 2 30	7 49 50	
	78 55½	57 22½		½ round	7 37 10		
	76 45	S 74 0 E	Gregory.		9 53 40	9 28 10	8° 39′ 57″ E. Sun.
	76 27	73 0		½ round	9 2 40		
	75 59	71 26⅔	Knight.		7 44 30	7 51 30	
	75 41	71 31⅓		½ round	7 58 20		
	75 11	72 25	Martin.		9 7 40	8 40 10	
	74 46	71 16¼		½ round	8 12 40		

The above was observed on shore at the Observatory.

Observations at Keragegoon Bay continued.

Azimuths continued, by Capt. Cooke.

These were observed on board the Resolution.

1779.	Altitude of the Sun's L. L.	Azimuths observed.	Compass used.		Variation deduced.	Mean.	Phenomena and Remarks.
	° ′	° ′			° ′ ″	° ′ ″	
☽ Feb. 1.	8 17	S 77 22 E	Gregory.	½ round	8 47 0	8 51 30	8° 51′ 10″ E. Sun.
	8 53	77 15			8 56 0		
	9 54	76 25	Knight N° 2.	½ round	8 33 40	8 45 50	
	10 19	76 38			8 58 0		
	11 27	75 55	Martin.	½ round	8 45 0	8 56 10	
	12 18	75 55			9 7 20		
	5 5⅓	S 63 30 W	Gregory.	½ round	6 36 20	6 37 0	6° 12′ 35″ E. Sun.
	4 45⅔	63 36⅔			6 37 40		
	4 16⅓	63 51⅔	Knight N° 2.	½ round	6 35 0	5 58 40	
	3 50⅓	65 15			5 22 20		
	3 17⅔	64 25	Martin.	½ round	6 25 40	6 2 5	
	2 29	68 28⅓			5 38 30		

Equal Altitudes for the Going of the Watch N° 2.

Jan. 18. Set my Astronomical Clock up, and a going nearly with sidereal time. But the natives seemed disposed to be troublesome, whence Captain Cooke ordered me to pack it up again, and send it on board the ship, and make observations for the going of the Watch only.

1779.	Time of Noon per Watch uncorrect.	Half Interval of Observations.	Time of Noon per Watch correct.	Watch slow for mean Time.	Daily Rate of Watch setting.	Days since Correct.	Phenomena and Remarks.
	H. ′ ″	H. ′ ″	H. ′ ″	H. ′ ″	″		
♂ Jan. 19.	8 24 15,6	4 16 32	8 13 4,0	3 46 56,0	7,1	16	Sun.
☿ — 20.	8 24 39,8	4 23 15	8 13 11,1	3 46 48,9	3,93	17	Do.
☽ — 25.	8 26 19,2	3 27 42	8 13 28,9	3 46 31,1	0,20	12	Do.
♂ — 26.	8 26 33,4	4 8 54	8 13 28,7	3 46 31,3	1,10	12	Do.
☿ — 27.	8 26 46,9	3 28 6	8 13 29,8	3 46 30,2	1,90	15	Do.
♀ — 29.	8 27 9,6	4 9 32	8 13 31,7	3 46 28,3	0,30	9	Do.
♄ — 30.	8 27 18,7	4 18 0	8 13 32,0	3 46 28,0	5,90	15	Do.
☽ Feb. 1.	8 27 26,6	3 7 34	8 13 26,1	3 46 33,9		14	Do.

The Watch got 15″,00 in 11 days, between Jan. 20 and Feb. 1, or at the rate of 1″,36 per day on mean time.

Obſervations at Keragegooa Bay continued.

Meridian Zenith Diſtances.

1779.	Zenith Diſtance obſerved.	Corrected Zenith Diſtance.	Declination.	Latitude deduced.	Barom.	Therm.	Object obſerved.
	° ′ ″	° ′ ″	° ′ ″	° ′ ″		°	
♃ Jan. 21	39 9 43	39 26 47	19 59 33 S	19 27 14	30,15	88	Sun.
♀ —— 22.	38 56 18	39 13 22	19 46 6	19 27 16	30,11	84½	Do.
♄ —— 23.	38 43 1	39 0 2	19 32 20	19 27 42	30,08	81	Do.
☉ —— 24.	38 28 11	38 45 14	19 18 11	19 27 3	30,02	82	Do.
☽ —— 25.	38 14 26	38 31 28	19 3 38	19 27 50	30,12	80	Do.
☿ —— 27.	37 44 14	38 1 12	18 33 32	19 27 40	30,20	81	Do.
♃ —— 28	37 28 25	37 45 23	18 18 0	19 27 23	30,20	81	Do.
♄ —— 29.	37 12 35	37 29 32	18 2 8	19 27 24	30,20	84	Do.
Stars North of the Zenith.							
♂ —— 26.	43 26 49,7	43 27 37,7	57 33 24 N	19 28 46 S	30,20	76	β Ursa Major.
	38 4 4,3	38 4 43,0	62 56 24	28 33			α
	35 26 12,3	35 26 47,7	54 55 24	28 40			γ
	37 40 3,5	37 40 37,6	58 8 46	28 10	30,20	76½	δ
	36 35 22,5	36 35 51,4	56 5 5	29 15			ζ
	30 56 42,5	30 57 4,0	50 25 21	29 17			η
Stars South of the Zenith.							
♀ —— 29.	27 55 34	27 55 57,6	8 28 16 S	19 27 41	30,21	77½	Rigel.
	35 52 24	35 53 8,1	16 25 34	27 26			Sirius.
	29 27 22½	29 27 58,0	10 0 3	27 45			Spica Virginis.
	76 54 30	76 58 45,7	57 31 8	27 36			1 Crucis.
	81 13 25	81 19 33,5	61 52 26	27 8	30,20	77	2
	75 16 19	75 20 9,2	55 52 22	27 47			3
	77 51 41	77 56 16,0	58 28 41	27 35			4
	78 40 31	78 45 23,3	59 17 39	27 35	30,20	79	β Centauris.
	54 42 27	54 43 58,6	35 16 6	27 32			δ
	79 17 23	79 22 31,6	59 54 59	27 45			α

The correction of the line of Collimation is 38″ additive to ſtars ſouth of the Zenith.
The latitude deduced from a mean of the whole = 19° 28′ 10″ North.

Obſervations at Keragegooa Bay continued.

Lunar Obſervations at Keragegooa Bay.

1779.	Time per Clock.	Apparent Time.	Diſtances obſerved.	Alt. ☉'s L. L.	Ze. D. of ☽'s U. L.	Sextant uſed.	Error of Sextant.	Barom.	Therm.	Obſerver.	Latitude in.	Longitude deduced.	Phenomena and Remarks.
	H. ′ ″	° ′ ″	° ′ ″	° ′	° ′		′ ″		°		° ′ ″	° ′ ″	
♄ Jan. 23	10 40 38	2 15 2	59 53 47	38 35	34 24½	D.	+0 15	30,20	78	B	19 28 10	203 49 0 E.	☽ à Sun.
	10 53 28	2 27 52	59 55 17	36 32	32 8	R.	+1 30					204 22 15	Do.
	11 2 3	2 36 26	59 57 50	35 0	30 39		+1 30					204 13 51	Do.
	11 8 11	2 42 35	60 1 45	34 1	29 43		+0 05					203 48 45	Do.
☽ —— 25.	11 29 45	3 3 31	34 18 40	40 44	50 42		+0 15	30,20	82			203 32 45	Do.
	11 37 38	3 11 23	34 18 56	39 34	48 52		+1 30					204 16 45	Do.
					Z.D. ☽ L.L.								
	16 45 12	8 18 54	34 45 21	83 24	41 24		−0 45	30,20	75			204 14 0	☽ à Aldebaran.
	16 55 27	8 29 9	34 39 28	80 56	43 27		+1 30					204 5 30	Do.
♀ —— 29	21 27 15	13 0 6½	25 27 59	13 55	51 17		+1 15	30,13	73			204 5 0	Do.
	21 37 39	13 10 31	25 29 13	11 4	53 34		+2 30					204 10 39	Do.
	21 57 46	13 30 38	55 2 44	81 29	57 57		+1 30	30,14	73			203 48 18	☽ à Regulus.
	22 11 38	13 44 30	54 57 27	79 1	60 58		+0 15					204 2 45	Do.
♄ —— 30.	22 2 18	13 35 2	39 57 32	80 9	44 36		+1 30	30,14	73			203 43 45	Do.
	22 13 27	13 46 11	39 53 48	78 3	47 13		+0 15					204 4 10	Do.
				Al. ☉ent.	Alt. ☽ U.L.								
Feb. 10.	6 13 28	21 45 37	61 50 27	42 50	36 53		+2 00	30,10	75			203 51 22	☽ à Sun.
	6 23 51	21 56 0	61 50 35	44 36	35 21		0 0					204 5 15	Do.

A mean of the above results is 204° 0′ 21″ E. or 155° 59′ 39″ West.

♀ —— 29. Emerſion of the third Satellite of Jupiter at 15h 31′ 46″,7 apparent time, from whence the longitude is = 203° 44′ 55″ E.
☉ —— 31. Emerſion of the firſt Satellite of Jupiter at 16 35 58 apparent time, from whence the longitude is = 204° 3′ 0″ E.
A mean of all the above results give the longitude of Keragegooa Bay = 203° 55′ 6″ E. or 156° 4′ 52″ W.

Azimuths obſerved at Keragegooa Bay.

1779.	Zen. Diſt. ☉'s U.L.	Azimuths obſerved.	Variation.	
	° ′	° ′	° ′	
☉ Jan. 24.	80 19 0	S 75 13½ E	9 29 E	Mean variation 9° 31′ E.
☽ —— 25.	57 34	41 25 W	9 31	
	78 51	74 46 E	9 22	
☿ —— 27.	Alt. ☉'s L.L			
	15 46	53 29 W	9 41	

Dip of the South Pole of the Magnetic Needle.

Mark End North.		Mark End South.		Mean Dip.	
E.	W.	E.	W.		
° ′	° ′	° ′	° ′	° ′ ″	
38 56,2	42 4	43 7,2	40 3,4	41 2 42	With the plain Needle. } Theſe obſerved
45 1,4	40 28,2	36 45,4	41 6,8	40 50 27	With the balanced Needle. } on ſhore.

The tides were very regular, flowing and ebbing 6 hours each. High Water on the full and change days at 3h 45′ apparent time. The greateſt riſe and fall was 2 feet 7 or 8 inches. The water roſe near 4 inches higher when the Moon was above the horizon, than when ſhe was below it. The flood came from the eaſtward. W. B.

Obſervations at St. Peter and Paul Oſtrog at Kamtſchatka.

Equal Altitudes for the Going of the Clock N° 2.

1779.	Time of Noon per Clock uncorrect.	Half Interval.	Time of Noon per Clock correct.	Clock ſlow for Sidereal Time.	Daily Rate of Clock getting.	N° of Obſervations	Phenomena and Remarks.
	H. ′ ″	H. ′ ″	H. ′ ″	′ ″	″		
♃ May 13.	3 16 59,8	4 40 36	3 16 44,8	1 48,9	11,4	25	Sun.
♀ —— 14.	3 21 6,8	4 48 54	3 20 51,7	1 37,5	14,2	22	Do.
☉ —— 16.	3 29 25,2	3 52 48	3 29 13,0	1 9,0	13,35	14	Do.
♃ —— 20.	3 46 14,4	5 20 30	3 45 59,9	0 15,6	13,48	22	Do.
♀ —— 21.	3 50 23,0	4 7 6	3 50 12,4	0 2,12 Faſt.	13,81	23	Do.
☉ —— 23.	3 58 51,6	4 12 36	3 58 40,5	0 25,5	13,20	8	Do.
☿ —— 28.	4 20 6,0	3 2 30	4 19 58,5	1 31,4	13,93	18	Do.
☽ —— 31.	4 33 1,4	5 20 3	4 32 51,4	2 13,2		26	Do.

June 8. By computing the time from ſingle altitudes taken this morning, the Clock was 3′ 55″,2 too faſt for ſidereal time at noon, and getting at the rate of 12″,75 per day on ſidereal time ſince the 31ſt of May. The pendulum vibrated from 1° 24′ to 1° 25″, which is 12 ſeconds leſs than the arc of vibration on each ſide (o) when a going in a low latitude where the weather is much warmer.

Equal Altitudes for the Going of the Clock N° 2, when at St. Peter and Paul the ſecond time.

1779.	Time of Noon per Clock uncorrect.	Half Interval of Obſervations.	Time of Noon per Clock correct.	Clock faſt for Sidereal Time.	Daily Rate of the Clock.	N° of Obſervations	Phenomena and Remarks.
	H. ′ ″	H. ′ ″	H. ′ ″	′ ″	″		
♃ Aug. 26.	10 18 38, 1	4 58 1	10 19 1,56	0 48,06	Getting. 12,18	14	Sun.
♀ Sept. 1.	10 41 49, 1	4 16 54	10 42 10,70	2 1,2	12,59	25	Do.
♃ —— 2.	10 45 40, 0	4 5 2	10 46 0,29	2 13,79	14,02	20	Do.
♄ —— 4.	10 53 18, 0	5 0 0	10 53 42,68	2 41,83	12,57	16	Do.
☉ —— 5.	10 57 7, 6	4 54 42	10 57 31,90	2 54,40	12,45	16	Do.
☽ —— 6.	11 0 57,75	4 46 0	11 1 21,75	3 6,85	13,69	12	Do.
♂ —— 7.	11 4 48,18	4 51 12	11 5 12,84	3 20,54	13,93	17	Do.
☿ —— 8.	11 8 38,41	4 43 30	11 9 2,77	3 34,47	15,07	14	Do.
♃ —— 16.	11 39 27,59	3 45 48	11 39 50,35	5 36,05	15,44	12	Do.
☉ —— 19.	11 51 1, 0	3 9 20	11 51 22,62	6 22,37	14,94	11	Do.
♀ —— 24.	12 10 11,09	4 26 6	12 10 36,39	7 37,09	14,91	12	Do.
♄ —— 25.	12 14 4,97	3 30 48	12 14 27,83	7 52,00	15,10	20	Do.
☉ —— 26.	12 17 53,48	4 12 6	12 18 17,93	8 7,10	14,76	16	Do.
27.	12 21 42,74	4 2 7	12 22 9,69	8 21,86		12	Do.

The pendulum vibrated from 1° 31′¼ to 1° 32′ on each ſide (o), which is 7″ more than before; this ſeems owing to the weather being much warmer.

Obfervations at St. Peter and Paul continued.

Computation of the Going of the Watch, N° 2, at Kamtſchatka.

1779.	Time per Watch at Comparison.	Time per Clock by Comparison.	Clock fast for Watch.	Clock gains on Watch.	Interval of Comparisons.	Clock gains on Watch in 24 H.	Clock gets on Sidereal Time.	Watch loses on Sidereal Time.	Watch losing on Mean Time.
	H. ′	H. ′ ″	H. ′ ″	′ ″	H. ′	′ ″	″	′ ″	″
May 12.	11 2	3 20 26	16 18 26						
13.	11 7	3 29 40	16 22 40	4 14	24 5	4 13,12	11,40	4 1,72	—5,22
14.	11 6	3 32 55	16 26 55	4 15	23 59	4 15,17	11,40	4 3,77	7,27
15.	11 10	3 41 9½	16 31 9½	4 14½	24 4	4 15,20	14,20	4 1,00	4,50
16.	11 10	3 45 25	16 35 25	4 15½	24 0	4 15,50	14,20	4 1,30	4,80
17.	11 8	3 47 41	16 39 41	4 16	23 58	4 16,35	13,35	4 3,00	6,50
18.	11 7	3 50 56	16 43 56	4 15	23 59	4 15,17	13,35	4 1,82	5,32
19.	11 4	3 52 11	16 48 11	4 15	23 57	4 15,51	13,35	4 2,16	5,66
20.	12 9	4 1 29	16 52 29	4 18	24 5	4 17,10	13,35	4 3,75	7,25
21.	11 5	4 1 44½	16 56 44½	4 15½	23 54	4 16,50	13,28	4 3,22	6,72
22.	11 7	4 8 2½	17 1 2½	4 18	24 2	4 17,50	13,81	4 3,69	7,19
23.	11 4	4 9 20	17 5 20	4 17½	23 57	4 18,00	13,81	4 4,19	7,69
24.	11 5	4 14 37	17 9 37	4 17	24 1	4 16,83	13,20	4 3,63	7,13
25.	11 15	4 28 56	17 13 56	4 19	24 10	4 17,24	13,20	4 4,40	7,90
26.	11 3	4 21 11	17 18 11	4 15	23 48	4 17,10	13,20	4 3,90	7,40
27.	11 2	4 24 27½	17 22 27½	4 16	23 59	4 16,67	13,20	4 3,47	6,97
28.	11 3	4 29 43	17 26 43	4 15	24 1	4 14,83	13,20	4 1,63	5,13
29.	11 2	4 33 0	17 31 0	4 17	23 59	4 17,17	13,93	4 3,24	6,74
30.	11 1	4 36 17½	17 35 17½	4 17½	23 59	4 17,67	13,93	4 3,74	7,24
31.	10 59	4 38 37	17 39 37	4 19	23 58	4 19,34	13,93	4 5,41	8,19
♀ June 1.	11 1	4 44 56	17 43 56	4 19½	24 2	4 19,16	13,75	4 5,41	8,91
2	11 8	4 56 16½	48 16½	4 20	24 7	4 18,78	13,54	4 5,24	8,74
3.	11 11	5 3 36	52 36	4 19½	24 3	4 19,00	13,50	4 5,50	9,00
4.	11 25	5 22 1	57 1	4 25	24 14	4 22,56	13,45	4 9,11	12,61
♃ 5	11 3	5 4 16	18 1 16	4 15	23 38	4 18,87	13,00	4 5,87	9,37
6.	11 9	5 14 36	5 36	4 20	24 6	4 19,00	12,75	4 6,25	9,75
7.	11 0	5 9 57	9 57½	4 21½	23 51	4 20,00	12,75	4 7,25	10,75
8.	11 13	5 27 20	14 20	4 22	24 13	4 20,20	12,75	4 7,45	10,95

A mean of the above rates = 7,615

Obſervations at St. Peter and Paul continued.

Rate of the Watch deduced from Obſervations made the ſecond time of our being at St. Peter and Paul.

1779.	Time pe. Watch	Time per Clock.	Clock faſt for Watch.	Clock gets on Watch per Day.	In tervals of Comparisons.	Clock gets on Watch in 24 H.	Clock gets on Sidereal Time.	Watch loſes on Sidereal Time.	Watch loſing on mean Time
	H. ′	H. ′ ″	H. ′ ″	′ ″	H. ′	′ ″	″	′ ″	″
♃ Aug. 26.	10 53	10 29 37	—23 23						
27.	10 46	10 26 56	19 04	4 19	23 53	4 20,27	12,18	4 8,09	11,59
28.	10 45	10 30 19	14 41	4 23	23 59	4 23,18	12,18	4 11,0	14,50
29.	11 49	11 38 50¼	10 9¾	4 31¾	25 04	4 19,85	12,18	4 7,67	11,17
30.	10 46	10 40 2¼	— 5 57¾	4 12	22 57	4 23,45	12,18	4 11,31	14,81
31.	11 2	11 0 26	+ 1 34	4 23¾	24 16	4 20,59	12,18	4 8,41	11,91
♃ Sept. 1.	10 48	10 50 47	2 47	4 21	23 46	4 23,53	12,18	4 11,35	14,85
2	10 44	10 51 9¾	7 9¾	4 22¼	23 56	4 22,98	12,59	4 10,39	13,85
3	10 42	10 53 32¼	11 32¼	4 23	23 58	4 23,36	12,59	4 10,77	14,27
4	10 45	11 0 55	15 55	4 23	24 3	4 22,21	14,20	4 8,00	12,50
5.	10 43	11 3 17	20 17	4 22	23 58	4 22,36	12,57	4 9,79	13,29
6.	10 39	11 3 39	24 39	4 22	23 56	4 22,73	12,45	4 10,28	13,78
7.	10 41	11 10 2	29 2	4 23	24 2	4 22,64	14,69	4 7,95	11,45
8.	10 39	11 12 24	33 24	4 22	23 58	4 22,36	14,57	4 7,79	11,29
9.	10 38	11 15 48	37 48	4 24	23 59	4 24,18	14,57	4 9,61	13,11
10.	10 33	11 15 12	42 12	4 24	23 55	4 24,90	15,07	4 9,83	13,33
11.	10 36	11 22 37	46 37	4 25	24 3	4 24,46	15,07	4 9,39	12,89
12	10 39	11 30 3¾	51 3¾	4 26¾	24 3	4 25,96	15,07	4 10,89	14,39
13.	10 54	11 49 33	55 33	4 29¾	24 15	4 26,77	15,07	4 11,70	15,20
14.	10 51	11 51 0	1 0 0	4 27	23 57	4 27,54	15,07	4 12,47	15,97
15.	10 25	11 29 22	1 4 22	4 22	23 24	4 28,56	15,07	4 13,49	16,99
16	10 35	11 43 48	1 8 48	4 26	24 10	4 24,18	15,07	4 9,11	12,61
17.	10 40	11 53 13	1 13 13	4 25	24 5	4 24,01	15,44	4 8,57	12,07
18.	10 39	11 56 38	1 17 38	4 25	23 59	4 25,18	15,44	4 9,57	13,24
19.	10 34	11 56 4	1 22 4	4 26	23 55	4 26,91	15,44	4 11,47	14,97
20	11 8	12 34 34	1 26 34	4 30	24 34	4 25,26	14,94	4 10,32	13,82
21.	10 47	11 17 55	1 30 55	4 21	23 39	4 24,83	14,94	4 9,89	13,39
22.	10 31	12 6 17	1 35 17	4 22	23 44	4 24,91	14,94	4 9,97	13,47
23.	10 33	12 12 40	1 39 40	4 23	24 2	4 22,64	14,94	4 7,70	11,20
24.	10 33	12 17 2	1 44 2	4 22	24 0	4 22,00	14,94	4 7,06	10,56
25.	10 34	12 22 24	1 48 24	4 22	24 1	4 21,82	14,94	4 6,91	10,41
26.	10 29	12 21 45	1 52 45	4 21	23 55	4 21,91	15,10	4 6,81	10,31
27.	10 30	12 27 7	1 57 7	4 22	24 1	4 21,82	15,10	4 6,72	10,22
28.	10 27	12 28 28	2 1 28	4 21	23 57	4 21,54	15,12	4 6,42	9,92
29	10 28	12 33 54	2 5 56	4 26	24 1	4 25,82	15,10	4 10,72	14,22
30.	9 44	11 54 10	2 10 10	4 16	23 16	4 24,03	15,07	4 8,96	12,42

A mean of the above rates = 12,″98 per day, loſing on mean time.

Obſervations at St. Peter and Paul continued.

Meridian Zenith Diſtances obſerved at St. Peter and Paul.

1779.	Zenith Diſtances obſerved ☉'s U. L.			True Zenith Diſtance.			Declination.			Barom.	Themr.	Latitude deduced.			Phenomena and Remarks.	
	°	′	″	°	′	″	°	′	″		°	°	′	″		
May 12.	34	40	0	34	56	25,7	18	3	25 N	29,94	45½	53	0	28,7	Sun.	
13.	34	26	34	34	42	25,7	18	18	20	30,00	45	53	0	45,7	Do.	
15.	33	56	12	34	12	37	18	47	32	30,04	47	53	0	9	Do.	
16.	33	42	3	33	58	27	19	1	42	29,85	44	53	0	9	Do.	
19.	33	1	38	33	17	58	19	42	7	29,87	45	53	0	5	Do.	
20.	32	48	40	33	4	1	19	54	58	29,91	47½	52	59	59	Do.	
21.	32	36	27	32	52	48	20	7	26	29,86	44	53	0	14	Do.	
22.	32	24	7	32	40	28	20	19	35	29,83	53	53	0	3	Do.	
28.	31	18	50	31	35	10	21	25	1	30,20	46	53	0	11	Do.	
29.	31	9	15	31	25	35	21	34	37	30,18	44	53	0	12	Do.	
31.	30	51	10	31	7	30	21	52	44	29,90	52	53	0	14	Do.	
June 1.	30	42	28	30	58	48	22	1	12	30,10	48	53	0	0	Do.	
							Stars.									
May 14.	81	8	17¼	81	14	31,4	45	45	7 N	29,84	38	53	0	22	Capella S. P.	North of the Zenith.
	5	14	45	5	14	50	58	15	41 N			53	0	51	♂ Urſa Major.	
	18	10	16	18	0	34,6	71	σ	44 N			53	0	9	κ Draconis.	
	12	25	10	12	25	22	65	26	14 N			53	0	52	α Draconis.	
	22	2	14	22	2	37	75	3	38 N			53	1	1	β Urſa Minor.	
	62	58	30	63	0	28	10	0	16 S	29,89	36	53	0	12	Spica Virginis	South of the Zenith
	48	23	5	48	24	12,8	4	36	8 N			53	0	21	ϑ Virginis	
	40	50	13	40	51	5	12	9	1 N			53	0	6	ε Virginis	
	32	39	17	32	39	55,6	20	20	21 N			53	0	16	Arcturus.	
	68	4	25	68	6	54,4	15	6	43 S			53	0	11	α Libræ.	
	78	50	26	78	55	18,2	25	55	11 S			53	0	7	Antares.	

Theſe Stars were obſerved between May the 14th and 20th, and each a mean of three nights obſervations.

A mean of all the above = 53° 00′ 18¼″ North.

Obſervation's at St. Peter and Paul continued.

Meridian Zenith Diſtances obſerved the ſecond Time of our being at Kamtſchatka.

1779.	Zenith Diſtances obſerved ☉'s U. L.	True Zenith Diſtance.	Declination.	Barom.	Therm.	Latitude deduced.	Phenomena and Remarks.
	° ′ ″	° ′ ″	° ′ ″		°	° ′ ″	
Sept. 3.	45 0 57	45 17 42	7 42 12 N	30,14	57	52 59 54	Sun.
4.	45 22 47	45 39 32	7 20 13 N	30,10	56	52 59 45	Do.
5.	45 45 15	46 2 0	6 58 0 N	30,14	60	53 0 0	Do.
8.	46 52 25	47 9 17	5 50 39 N	30,00	61	52 59 56	Do.
16	49 56 2	50 13 1	2 47 23 N	29,60	57	53 0 24	Do.
19.	51 5 40	51 22 41	1 37 36 N	29,32	61	53 0 17,4	Do.
22.	52 16 2½	52 33 15	0 27 30 N	29,32	60½	53 0 45	Do.
23.	52 39 0	52 56 13	0 4 5 N	29,14	53	53 0 18,6	Do.
24	53 2 28	53 19 42	0 19 21 S	29,98	56	53 0 21	Do.
25.	53 25 45	53 43 0	0 42 47 S	30,28	57	53 0 13	Do.
27.	53 49 26½	54 29 48	1 29 40 S	30,19	54	53 0 39	Do.
	Stars South of the Zenith.						
2.	14 24 34	14 24 48,6	38 35 17 N	30,10	55	53 0 5,6	α Lyra.
	42 53 48	42 54 33,5	10 05 40 N			53 0 13,1	γ Aquilæ.
	44 41 20	44 42 16,8	8 18 10 N			53 0 27,1	α Aquilæ.
	47 7 17	47 8 18,7	5 51 43 N			53 0 1,3	β Aquilæ.
	66 11 5	66 13 14,8	13 12 37 S			53 0 37,4	α Capricorni.
	8 30 55	8 31 3,1	44 28 47 N			52 59 50	α Cygni.
	54 21 52	54 23 12,0	1 22 40 S			53 0 32	α Aquarii.
	Stars North of the Zenith.						
	14 15 32	14 15 46,5	67 16 51 N	30,13	56½	53 1 4	δ Draconis.
	8 38 22	8 38 30,1	61 39 48 N			53 1 19	α Cephei.
	16 34 35	16 34 51,9	69 36 5 N			53 1 12	ι Cephei.
	69 22 25	69 24 55,0	57 33 24 N			53 1 41	β Urſæ Major S. P.
	64 0 36	64 2 32,7	62 56 6 N			53 1 21	α Urſæ Major S. P.
	72 0 24	72 3 18,2	54 55 10 N			53 1 32	γ Urſæ Major S. P.
	68 40 36	68 43 2,0	58 15 28 N			53 1 30	δ Urſæ Major S. P.
	69 46 0	69 48 33,3	57 9 37 N			53 1 30	ε Urſæ Major S. P.
	70 50 41	35 6 40,0	56 4 57 N			53 1 40	ζ Urſæ Major S. P.
	76 29 26	70 53 23,6	50 25 16 N			53 1 23	η Urſæ Major S. P.
6	35 6 0	76 33 29,9	89 7 37 N			53 0 57	Polaris.

Theſe Stars were obſerved between the ſecond and ſixth of September, and each a mean of three nights obſervations.

Correction of the line of collimation is 32″ additive to obſervations ſouth of the Zenith, whence a mean of all the above = 53° 0′ 43″,4 N. and a mean of the two means = 53° 00′ 31″ the true latitude N.

Obſervations at Kamtſchatka continued.

Lunar Obſervations.

1779.	Time per Clock.	Apparent Time.	Diſtances obſerved.	Zen. Diſt. ☉'s U. L.	Zen. Diſt. ☽'s U. L.	Sextant uſed.	Error of Sextant.	Barom.	Ther.	Obſerv.	Latitude in.	Longitude deduced.	Phenomena and Remarks.
	H. ′ ″	H. ′ ″	° ′ ″	° ′	° ′		′ ″		°		° ′ ″	° ′ ″	
♃ May 20.	6 5 39	2 19 14	56 14 13	42 16	34 50	D.	+2 0c	29,92	38		53 0 31	158 42 45	☽ à Sun.
	6 26 1	2 39 33	56 18 42	44 46	32 53	R.	+1 1c					158 43 7	Do.
	6 33 35	2 47 26	56 23 42	45 48	32 12		−1 5					158 53 c	Do.
	6 44 29	2 57 59	56 26 3c	47 11	31 22		+1 1c					158 40 3c	Do.
	6 51 19	3 4 48	56 30 24	48 6	30 52		−2 6					158 46 3c	Do.
				Ze. Diſt.	✱ Z.D. ☽ L.L								
	13 42 46	9 55 2	27 47 0	67 55	59 45		−1 5	29,70	35½			158 42 0	☽ à Regulus.
	13 51 15	10 3 3c	27 38 58	69 7	60 57		+1 1c					158 25 45	Do.
	14 4 44	10 16 57	27 33 56	71 2	63 0		−1 5					158 45 15	Do.
	14 10 56	10 23 7	27 27 30	71 55	63 48		+1 1c					158 41 3c	Do.
	14 40 54	10 53 c	81 11 42	65 42	75 56		−1 5					159 3 30	☽ à Spica Virginis.
	14 45 59	10 58 3	81 5 26	66 3	76 46		+1 10					158 43 45	Do.
				Z.D. ☉ U.L.	Z.D. ☽ U.L.								
♀ — 21.	6 6 16	2 15 43	69 46 33	41 37	44 34		+1 15	29,80	57			158 29 15	☽ à Sun.
	6 12 51	2 22 17	69 50 59	42 19	43 43		−1 1c					158 43 15	Do.
	6 23 55	2 33 2c	69 53 57	43 47	42 22		+1 15					158 21 15	Do.
	6 29 34	2 38 56	69 58 29	44 29	41 42		−1 1c					158 19 30	Do.
	6 39 45	2 49 6	69 58 12	45 50	40 30		+1 1c					158 56 0	Do.
♄ — 22.	7 13 26	3 18 29	83 36 10	49 39	47 7		−1 1c	29.92	56			158 38 25	Do.
	7 17 22	3 22 24	83 35 16	50 12	46 39		+1 15					158 41 45	Do.
	7 29 49	3 34 45	83 43 20	51 59	45 11		−1 1c					158 30 10	Do.
	7 35 16	3 40 1c	83 43 33	52 44	44 35		+1 15					158 24 30	Do.
	7 43 34	3 48 31	83 46 27	53 57	43 40		+1 15					158 37 0	Do.
	7 49 5	3 54 3	83 51 56	54 51	43 5½		−1 1c					158 30 45	Do.
☉ — 23.	7 16 6	3 16 51	96 33 17	49 18	58 1		+2 1c	29,70	47			158 54 30	Do.
	7 24 25	3 25 9	96 40 28	50 27	56 59		−1 15					158 50 15	Do.
	7 34 17	3 35 c	96 42 3	51 51	55 45		+1 10					159 0 0	Do.
	7 41 19	3 42 c	96 47 58	52 51	54 51		−1 15					158 46 45	Do.
				✱ Ze. Diſt.	Z.D. ☽ U.L.								
♃ — 27.	14 37 58	10 20 24	68 9 12	66 51	63 56		−1 15	30, 0	34½			158 33 3c	☽ à Regulus.
	14 45 3	10 27 29	68 8 50	67 9	64 5		+1 2c					158 32 15	Do.
	15 36 8	11 18 24	32 2 24	79 21	66 8		−1 c					158 22 45	☽ à Antares.
				Z.D. ☉ U.L.	Z.D. ☽ U.L.								
♂ June 7.	2 12 9	21 5 21	83 27 50	44 25	68 5		−1 1c	30,1c	46½			158 58 7	☽ à Sun.
	2 16 32	21 9 44	83 23 5c	43 50	68 25		+1 15					159 0 3c	Do.

A mean of all the above is = 158° 40′ 51″ for the longitude Eaſt.

Lunar Obſervations made the ſecond Time of our being at Kamtſchatka.

1779.	Time per Clock.	Apparent Time.	Diſtances obſerved.	Zen. Diſt. ☉'s U. L.	Zen. Diſt. ☽'s U. L.	Sextant uſed.	Error of Sextant.	Barom.	Ther.	Obſer.	Latitude in.	Longitude deduced.	Phenomena and Remarks
	H. ′ ″	H. ′ ″	° ′ ″	° ′	° ′		′ ″		°		° ′ ″	° ′ ″	
♃ Sept. 2.	8 54 47	22 5 13	98 46 5	50 43	64 45		−1 40	30,13	51		53 0 31	159 21 45	☽ à Sun.
	9 9 58	22 20 22	98 36 18	49 25	66 46		+0 30					159 15 00	Do.
	9 25 21	22 35 44	98 29 17	48 9	69 36		+0 3c					159 21 45	Do.
	9 28 58	22 39 20	98 29 27	47 53	69 36		−1 4c					159 17 00	Do.
	9 38 1	22 48 22	98 23 5c	47 18	70 56		−0 4c					159 19 15	Do.
	9 40 16	22 50 36	98 21 0	47 10	71 14		+0 3c					159 4 3	Do.
	9 43 48	22 54 7	98 18 35	46 57	71 44		+0 3c					158 45 3c	Do.
	9 47 4	22 57 23	98 20 10	46 46	72 9		−1 40					159 17 45	Do.
♀ — 3.	6 22 47	22 5 13	86 59 53	70 25	34 45		+1 0	30,10	54			159 25 34	Do.
	6 29 25	19 36 25	86 58 12	69 22	35 19		−1 c					159 18 45	Do.
	7 30 19	20 37 9	86 31 38	61 18	42 6		+1 0					159 13 22	Do.
♄ — 4.	6 37 43	19 40 52	73 42 58	69 4	29 6		+1 c	30,10	56			158 59 4	Do.
	6 44 41	19 47 49	73 41 55	68 9	29 29		−1 0					158 50 3c	Do.
	7 18 20	20 21 23	73 28 34	63 8	31 58		−1 0					158 39 15	Do.
	7 24 17	20 27 20	73 24 8	62 38	32 30		+1 c					158 49 c	Do.
	9 22 49	22 25 33	72 36 15	49 37	46 46		−1 c					158 57 15	Do.
	9 28 51	22 31 35	72 30 43	48 50	47 39		+1 c					158 31 0	Do.

Obſervations at Kamtſchatka continued.

Lunar Obſervations made the ſecond Time of our being at Kamtſchatka continued.

1779.	Time per Clock.	Apparent Time.	Diſtances obſerved.	Z. Diſt. of ✱	Zen. Diſt. ☽'s L. L.	Sextant uſed.	Error of Sextant.	Barom.	Therm.	Obſervers	Latitude in.	Longitude deduced.	Phenomena and Remarks.
	H. ′ ″	H. ′ ″	H. ′ ″	° ′	° ′		′ ″		°		° ′ ″	° ′ ″	
♃ Sept. 5	2 56 15	15 56 11	34 54 13	40 59	51 25	D.	−1 0	30,00	49	B		158 34 0	☽ à Aldebaran.
	3 0 41	16 1 36	34 56 43	40 37	50 46	R.	+1 0					158 38 0	Do.
	3 10 44	16 10 37	35 4 3	39 49	49 22		+1 0					158 36 15	Do.
	3 16 9	16 16 2	35 7 3	39 28	48 36		−1 0					158 48 30	Do.
				Z.D. ☉ U.L.	Z.D. ☽ U.L.								☽
	7 50 0	20 49 8	59 44 13	60 11	28 55		+1 0	30,11	57		53 0 31	158 41 15	à Sun.
	7 56 12	20 55 20	59 41 42	59 18	29 18		+1 0					158 38 30	Do.
	8 5 43	21 4 49	59 39 50	58 8	29 57		−1 0					158 39 45	Do.
	8 11 8	21 11 14	59 38 5	57 29	30 22		−1 0					159 8 15	Do.
	8 26 21½	21 25 2[illegible]	59 32 0	55 45	31 38		−1 0					159 0 0	Do.
	8 33 17	21 32 20	59 26 47	54 59	32 18		+1 0					158 51 45	Do.
					Z.D. ☽ L.L.								
☽ — 6.	1 51 22	14 50 0	48 48 27	48 10	71 4		−1 0	29,91	48			158 37 30	☽ à Aldebaran.
	1 57 39	14 53 55	48 52 20	47 45	70 11		−1 0					158 32 45	Do.
	2 10 26	15 6 39	48 57 37	45 48	68 54		+1 0					158 46 0	Do.
	2 16 14	15 12 26	49 1 5	45 38	67 33		+1 0					158 42 0	Do.
				Z.D. ☉ U.L.	Z.D. ☽ U.L.								
♃ — 16.	15 39 8	3 59 14	74 15 28	69 41	76 13		+1 10	29,98	57			158 36 15	☽ à Sun.
	15 45 51	4 5 56	74 17 58	70 37	76 03		+1 10					158 30 0	Do.
	15 54 23	4 15 26	74 22 23	71 50	75 52		−1 0					159 4 15	Do.
	16 0 45	4 20 47	74 24 38	72 44	75 45		−1 0					158 52 30	Do.
♄ Oct. 2.	18 36 5	20 10 17	90 28 26	73 57	35 59		−1 0	29,78	54			158 55 15	Do.
	18 41 29	20 15 40	90 26 23	73 15	36 38		−1 0					158 48 15	Do.
	18 49 46	20 23 56	90 20 41	72 10	37 39		+1 0					158 37 15	Do.
	18 55 25	20 29 34	90 18 7	71 28	38 21		+1 0					158 31 0	Do.

A mean of all the above reſults = 158° 46′ 30″ E.
The mean reſult of all my former obſervations = 158° 40′ 51″ E.
A mean of all the reſults of the Lunar Obſervations = 158° 43′ 4[illegible]½″ for the longitude of Kamtſchatka Eaſt of Greenwich.

Azimuths obſerved at St. Peter and Paul at Kamtſchatka.

1779.	Zen Diſt. ☉ U.L.	Azimuths obſerved.	Variation.	
	° ′	° ′	° ′	
♄ May 15.	64 4	S 80 48 W	47 E	
	60 26	S 76 40 W	6 28	
	64 21	N 84 54 E	6 16	
	55 36	S 83 38 E	6 39	Mean Variation = 6° 21′¼ E.
	73 50	N 71 51 E	6 3	
	63 57	S 83 38 W	6 6	Each day's obſervation is a mean of 6 or more.
	67 27	N 89 29 W	6 17	
	63 22	N 82 23 W	6 18	
Aug. 26.	72 30	N 88 47 E	6 57 E	
Sept. 1.	70 17	S 71 35 W	6 11	
♃ — 2.	72 11	S 73 7 W	6 41	
5.	69 42	S 80 49 W	6 57	Mean Variation 6° 41′ E.
6.	76 7	S 76 22 W	6 17	
	70 59	S 82 2 E	6 54	A mean of the two means 6° 31′ 22″½ the variation E.
♂ — 7.	69 53	S 79 47 E	6 51	

Obſervations at Kamtſchatka continued.

Dips of the North End of the Needle at Kamtſchatka.

Mark End North. E. ° ′	Mark End North. W. ° ′	Mark End South. E. ° ′	Mark End South. W. ° ′	
64 17	64 16	64 15,4	64 6,2	64° 13′ 39″ Mean dip on board.
64 26,8	64 31	64 43,4	64 16,2	64° 29′ 21″ Mean dip on ſhore.

The tides were very regular every 12 hours; on the full and change days it was high water at 4^h 36′ apparent time, the water roſe 5 feet 8 inches perpendicular at greateſt. The time of high water was ſooner by at leaſt two hours on the eaſt coaſt than in the harbour of St. Peter and Paul; the flood came from the ſouth up the coaſt. W. B.

Lieutenant King's Remarks concerning the Watch N° 1.

1779. April 26. A little before noon found the time-keeper N° 1. ſtopt, it ſhewed 7^h 52′ 15″; not knowing the cauſe of its ſtopping we wound it up, in doing which it took about four turns, but we did not ſet it agoing.

Signed { CHARLES CLERKE, J. KING.

29. The ſhip being in the harbour of St. Peter and St. Paul without any motion, and the day remarkably fine, and no fire in the cabin, we thought it the beſt time to permit Benjamin Lyon, a ſeaman on board, who had ſerved his time to Richard Gibbs of Plumbtree Court, Holborn, watch-maker, who appeared to us ſufficiently knowing in his buſineſs from having repaired and cleaned watches during the voyage, to look into the time-keeper; not finding any of the work broke, he took the cock and balance off, and cleaned both [*the pivot*] holes, which he found very foul, and the inſide of the time-keeper rather dirty; he alſo took the dial-plate off, the wheel that leads into the ſecond hand, between two teeth, found a piece of dirt, [*and between two teeth of the wheel that carries the ſecond hand found a piece of dirt*] which he thinks to be the principal cauſe of its ſtopping; he afterwards put the work together, putting the leaſt oil poſſible in the cock and foot [*holes*] when the watch appeared to go free and well.

Signed { CHARLES CLERKE, J. KING.

May 22, to June 5. The time-keeper was frequently opened by Benjamin Lyon (Lieutenant King preſent) altering the regulator [*and balance ſpring*] and comparing it with the clock in order to get it to time: on the 5th of June, after having gone 24 hours very well, it ſtopped, and the pendulum ſpring was found broken.

Signed { CHARLES CLERKE, J. KING.

*** In the paſſage from Sandwich Iſlands to Kamtſchatka, the pendulum ſpring of the clock N° 1. in the care of Lieutenant King, became ruſty and broke, which rendered it in a manner uſeleſs during the remaining part of the voyage.

Obſervations at Kamtſchatka continued.

Lunar Obſervations by Lieutenant King, &c.

1779.	Time per Clock N° 1.	Apparent Time.	Diſtance obſerved.	Zen. Diſt. ☉'s U. L.	Zen. Diſt. ☽'s U. L.	Sextant uſed.	Error of Sextant.	Barom.	Therm.	Obſerver.	Latitude is.	Longitude deduced.	Phenomena and Remarks.
	H. ′ ″	H. ′ ″	° ′ ″	° ′	° ′		′ ″		°		° ′ ″	° ′ ″	
♃ May 20.	6 26 1	2 39 53	56 23 30	44 40	32 53	R. 3	—1 20	30,00	38	C	53 0 38 N	158 18 30	☽ à Sun.
	6 26 1	2 39 3	56 22 20	44 46	32 53	D.	—2 7			B		159 5 15	Do.
	6 33 55	2 47 26	56 25 27	45 48	32 16½	D.	—2 7			C		159 13 15	Do.
	6 33 55	2 47 26	56 26 5	45 48	32 16½	R. 3	—1 20			B		158 35 45	Do.
	6 44 30	2 57 59	56 26 27	47 11	31 22	R. 1	+2 0			C		158 49 30	Do.
	6 44 30	2 57 59	56 26 42	47 11	31 22	R. 5	+2 0			B		158 56 0	Do.
	6 51 19	3 4 45	56 29 57	48 7	30 52½	R. 5	+2 0			C		158 41 45	Do.
	6 51 19	3 4 45	56 29 7	48 7	30 52½	R. 1	+2 0			B		159 2 15	Do.
				Z. D. ✱	Z.D. ☽ L.L.								
	13 42 46	10 38 13	17 44 30	59 47	67 54	R. 1	+2 0	30,01	36	B		158 50 45	☽ à Regulus.
	13 51 15	10 37 14	17 42 40	60 58	69 6	R. 3	—1 20			B		158 36 0	Do.
	14 4 44	10 40 13	17 36 10	62 54	71 4	D.	—2 7			B		159 21 0	Do.
				Z D.☉U.L.	Z.D. ☽ U.L.								
♀ — 21.	6 23 55	2 33 20	69 58 40	43 37	42 22	R. 3	—0 55	29,88	42	C	53 0 38	157 44 30	☽ à Sun.
	6 23 55	2 33 20	69 57 52	43 37	42 22	D.	—2 10			K		158 37 30	Do.
	6 29 34	2 38 56	70 0 30	44 27	41 42	D.	—2 10			C		158 28 30	Do.
	6 29 34	2 38 56	70 0 45	44 27	41 42	R. 3	—0 55			K		157 47 45	Do.
	6 39 44	2 49 6	70 1 12	45 50	40 30	R. 1	+2 0			C		158 12 45	Do.
	6 39 44	2 49 6	70 1 12	45 50	40 30	R. 5	+2 0			K		158 12 45	Do.
	6 46 9	2 55 28	70 4 15	46 41	39 47	R. 5	+2 0			C		158 4 15	Do.
	6 46 9	2 55 28	70 4 5	46 41	39 47	R. 1	+2 0			K		158 8 45	Do.
				Z.D.☉U.L.	Z.D. ☽ U.L.								
♄ — 22.	7 29 59	3 34 54	83 43 47	51 59	45 11	R. 3	—1 20	29,96	43	C	53 0 38	158 35 15	Do.
	7 29 59	3 34 54	83 44 28	51 59	45 11	D.	—2 0			K		158 35 15	Do.
	7 35 16	3 40 23	83 46 55	52 45	44 35	D.	—2 0			C		158 30 30	Do.
	7 35 16	3 40 23	83 45 17	52 45	44 35	R. 3	—1 20			K		158 56 45	Do.
	7 43 34	3 48 39	83 47 45	53 56	43 37½	R. 5	+2 7			C		157 51 45	Do.
	7 43 34	3 48 39	83 47 5	53 56	43 37½	R. 1	+2 30			K		158 1 0	Do.
	7 49 5	3 54 14	83 50 10	54 45	43 7	R. 1	+2 30			C		157 37 30	Do.
	7 49 5	3 54 14	83 50 27	54 45	43 7	R. 5	+2 7			K		157 39 45	Do.
				Z.D.☉U.L.	Z.D. ☽ U.L.								
☉ — 25.	7 16 6	3 16 51	96 37 40	49 21	58 5	D.	—2 15	30,03	40	K	53 0 38	158 56 0	Do.
	7 24 5	3 25 9	96 38 7	50 24	56 59	R. 1	+2 20			K		158 20 15	Do.
	7 34 17	3 35 21	96 46 5	51 57	55 44	D.	—2 15			C		158 40 45	Do.
	7 34 17	3 35 21	96 46 10	51 51	55 44	R. 3	—1 57			K		158 32 45	Do.
	7 41 19	3 42 0	96 49 5	52 52	54 51	R. 3	—1 57			C		158 16 15	Do.
	7 41 17	3 42 0	96 46 17	52 52	54 51	R. 5	+2 10			K		158 0 0	Do.
				Z. D. of ✱	Z.D. ☽ U.L.								
♃ — 27.	14 39 17	10 21 43	68 9 32	67 45	63 57	D.	—1 45	29,99	42	C	53 0 38	158 53 30	☽ à Regulus.
	14 39 17	10 21 43	68 5 52	67 45	63 57	R. 1	+2 20			K		158 55 0	Do.
	14 49 14	10 31 40	68 13 40	69 14	64 11	D.	—1 45			C		159 3 45	Do.
	14 49 14	10 31 40	68 9 45	69 14	64 11	R. 1	+2 20			K		158 58 45	Do.
	15 5 40	10 48 3	14 53 55	67 12	64 43	R. 1	+2 20			C		159 26 30	☽ à Spica Virginis.
	15 5 40	10 48 3	14 58 0	67 12	64 43	D.	—1 45			K		159 23 30	Do.
	15 14 2	10 56 24	15 1 12	67 54	65 3	D.	—1 45			C		159 8 15	Do.
	15 14 2	10 56 24	14 56 42	67 54	65 3	R. 1	+2 20			K		159 23 45	Do.
	15 28 25	11 10 44	32 9 45	79 30	65 42	D.	—1 45	29,79	41	C		159 3 15	☽ à Antares.
	15 28 25	11 10 44	32 4 5	79 30	65 42	R. 1	+2 30			K		158 22 30	Do.
	15 41 50	11 23 7	32 0 12	79 12	66 27	R. 1	+2 30			C		158 42 45	Do.
	15 41 50	11 23 7	32 5 0	79 12	66 27	D.	—1 45			K		159 21 30	Do.
	15 52 27	11 35 12	32 56 52	78 59	67 9	R. 1	+2 30			C		158 59 15	Do.
	15 52 27	11 35 12	32 1 15	78 59	67 9	D.	—1 45			K		158 55 45	Do.

A mean of the above is = 158° 38′ 21″ the longitude Eaſt.

Obſervations at Kamtſchatka continued.

Lunar Obſervations taken at Kamtſchatka by Captain King and Officers.

1779.	Time per Clock.	Apparent Time.	Diſtance obſerved.	Z. Diſt. of the ☉'s U. L.	Zen. Diſt. of the ☽'s U. L.	Sextant Side.	Error of Sextant.	Barom.	Therm.	Obſerver	Latitude in.	Longitude deduced.	Phenomena and Remarks.
	° ′ ″	° ′ ″	° ′ ″	° ′	° ′		′ ″		°		° ′ ″	° ′ ″	
24 Sept. 2.	8 55 37	22 4 22	98 46 57	50 36	64 38	D.	−2 30	30,17	51	K	53 0 38 N	158 46 30	☽ à Sun.
	8 55 37	22 4 25	98 44 6	50 36	64 38	R. 1	−0 45			M		159 3 15	Do.
	9 10 9	22 18 51	98 38 30	49 26	66 59	R. 1	−0 45			K		159 3 0	Do.
	9 10 9	22 18 51	98 39 2	49 26	66 59	D.	−2 30			M		158 26 45	Do.
	9 25 48	22 34 27	98 32 2	48 25	69 0	D.	−2 30			K		158 51 0	Do.
	9 25 48	22 34 27	98 31 2	48 25	69 0	R. 1	−0 45			M		159 11 30	Do.
	9 39 12	22 47 49	98 24 5	47 20	70 52	R. 1	−0 45			K		159 4 15	Do.
	9 39 12	22 47 49	98 24 50	47 20	70 52	D.	−2 30			M		158 40 0	Do.
	9 46 13	22 54 49	98 19 12	46 54	71 52	R. 3	+0 30			K		159 3 45	Do.
	9 46 13	23 54 49	98 19 40	46 54	71 52	R. 2	0 0			M		159 2 45	Do.
	9 51 57	23 0 32	98 16 30	46 38	72 39½	R. 2	0 0			K		159 0 0	Do.
	9 51 57	23 0 32	98 15 52	46 38	72 39½	R. 3	+0 30			M		158 56 30	Do.
	9 57 14	23 5 48	98 12 40	46 23	73 23	R. 3	+0 30			K		158 41 15	Do.
	9 57 14	23 5 48	98 13 25	46 23	73 23	R. 2	0 0			M		158 49 30	Do.
	10 2 6	23 10 39	98 11 12	46 8	74 1½	R. 2	0 0			K		159 0 30	Do.
	10 2 6	23 10 39	98 10 37	46 8	74 1½	R. 3	+0 30	30,15	49	M		158 55 45	Do.
				Z.D. of ✱	Z. D. ☽'s L.L.								
♀ — 3.	2 30 32	15 36 18	38 44 27	31 17	40 26	D.	−2 30			K		158 10 15	α Arietis.
	2 30 32	15 36 18	38 42 37	31 17	40 26	R. 1	−0 45			M		158 12 30	Do.
	2 40 49	15 46 33	38 45 50	31 43	39 15	R. 1	−0 45			K		158 39 30	Do.
	2 40 49	15 46 33	38 47 55	31 43	39 15	D.	−2 30			M		158 30 30	Do.
	3 2 50	16 8 31	38 54 22	32 53	36 52	R. 2	0 0			K		158 32 15	Do.
	3 2 50	16 8 31	38 52 55	32 53	36 52	R. 3	+1 0			M		158 44 15	Do.
	6 33 2	19 38 7	86 58 52	69 39	35 29	D.	−2 45	30,15	50	K		159 7 45	☽ à Sun.
	6 33 2	19 38 7	86 58 47	69 39	35 29	R. 1	−2 30			M		159 12 15	Do.
	6 58 37	20 3 38	86 48 15	65 31	38 8	R. 1	−2 30			K		158 38 45	Do.
	6 58 37	20 3 38	86 48 27	65 31	38 8	D.	−2 45			M		158 44 15	Do.
	7 7 6	20 12 5	86 42 27	64 23½	39 5	R. 3	+1 0			K		159 9 0	Do.
	7 7 6	20 12 5	86 43 35	64 23½	39 5	R. 2	0 0			M		159 12 45	Do.
	7 13 19	20 18 7	86 40 15	63 20	39 47	R. 2	0 0			K		158 41 15	Do.
	7 13 19	20 18 7	86 40 45	63 20	39 47	R. 3	+1 0			M		159 23 15	Do.
	7 40 1	20 44 55	86 29 7	60 20	43 5½	B.	−0 7			K		158 44 15	Do.
	7 40 1	20 44 55	86 31 2	60 20	43 5½	R. 4	−1 34			M		158 57 15	Do.
	7 46 43	20 51 36	86 28 20	59 34	44 57½	R. 4	−1 34			K		159 2 0	Do.
	7 46 43	20 51 36	86 26 45	59 34	44 57½	B.	−0 7			M		158 58 15	Do.
♄ — 4.	6 33 22	19 34 26	73 48 10	70 33	28 46½	D.	−2 45			K		158 57 0	Do.
	6 33 22	19 34 26	73 47 45	70 33	28 46½	R. 2	−2 30	30,13	50½	M		158 52 30	Do.
	6 40 27	19 41 30	73 44 15	69 33	29 6½	R. 1	−2 30			K		158 30 45	Do.
	6 40 27	19 41 30	73 45 15	69 33	29 6½	D.	−2 45			M		158 51 30	Do.
	7 15 0	20 15 57	73 30 52	64 39	31 29	R. 2	−0 30			K		159 21 45	Do.
	7 15 0	20 15 57	73 29 45	64 39	31 29	R. 3	+0 30			M		159 18 30	Do.
	7 25 35	20 26 30	73 25 35	63 14	32 25	R. 3	+0 30			K		158 52 0	Do.
	7 25 35	20 26 30	73 26 10	63 14	32 25	R. 2	−0 30			K		159 7 0	Do.
	7 45 35	20 46 27	73 17 5	60 32	34 23	B.	−0 10			K		158 46 0	Do.
	7 45 35	20 46 27	73 19 10	60 32	34 23	R. 4	−1 30			M		159 6 45	Do.
	7 45 35	20 46 27	73 18 37	60 32	34 23½	R. 2	−0 30			T		159 19 0	Do.
	7 56 44	20 57 34	73 14 25	59 13	35 35½	R. 4	−1 30			K		159 3 15	Do.
	7 56 44	20 57 34	73 12 35	59 13	35 35½	B.	−0 10			M		158 49 30	Do.
	7 56 44	20 57 34	73 14 52	59 13	35 35½	R.	−2 30			T		158 46 15	Do.

In all the foregoing diſtances the error of the Sextant is not applied.

But in the following the errors are all applied, and the diſtances ſet down correct.

8 21 17	21 22 3	73 2 23	56 18	38 26½	D.	−2 7	30,13	53	K	53 0 38 N	158 53 30	Do.
8 21 17	21 22 3	73 2 2	56 18	38 26½	R. 1	−2 30			M		158 43 45	Do.
8 21 17	21 22 3	73 2 52	56 18	38 26½	R. 4	−1 30			T		159 21 15	Do.
8 26 17	21 22 3	73 3 17	56 18	38 26½	R. 3	+0 30			V		159 19 0	Do.
8 33 2	21 33 46	72 56 42	54 57	39 55	R. 2	−2 30			K		158 33 0	Do.
8 33 2	21 33 46	72 56 30	54 57	39 55	R. 3	+0 30			P		158 27 30	Do.
8 33 2	21 33 46	72 57 13	54 57	39 55	D.	−2 7			T		158 47 45	Do.
8 33 2	21 33 46	72 56 12	54 57	39 55	R. 4	−1 30			V		158 19 15	Do.
8 46 43	21 47 25	72 51 18	53 47	41 41½	D.	−2 7			M		158 23 45	Do.
8 46 43	21 47 25	72 51 12	53 47	41 41½	R. 4	−1 30			P		158 21 0	Do.

In the column of Obſervers T. ſtands for Trevenion, P. for Paul, and V. for Vancouver, midſhipmen.

Obſervations at St. Peter and Paul continued.

Lunar Obſervations at Kamtſchatka continued.

1779.	Time per Clock N° 1.	Apparent Time.	Diſtances obſerved.	Zen. Diſt. of the ✱.	Zen. Diſt. of the ☽'s U. L.	Sextant uſed.	Error of Sextant.	Barom.	Therm.	Obſerved.	Latitude in.	Longitude deduced.	Phenomena and Remarks.
	H. ′ ″	H. ′ ″	° ′ ″	° ′	° ′		′ ″		°		° ′ ″	° ′ ″	
♄ Sept. 4.	8 46 43	21 47 25	72 50 57	53 47	41 41½	R. 3	+0 30	30,13	53	T	53 0 38 N	158 14 0	☽ a Sun.
	8 46 43	21 47 25	72 51 27	53 47	41 41½	R. 1	−2 30			V		158 29 45	Do.
	8 57 8	21 57 48	72 46 52	52 31	43 3½	R. 3	+0 30			K		158 48 0	Do.
	8 57 8	21 57 48	72 47 7	52 31	43 3½	R. 2	−0 30			P		158 55 0	Do.
	8 57 8	21 57 48	72 46 23	52 31	43 3½	D.	−2 7			V		158 34 45	Do.
	9 3 37	22 4 16	72 44 37	51 59	45 55½	R. 2	−0 30			K		159 5 0	Do.
	9 3 37	22 4 16	72 43 55	51 59	45 55½	D.	−2 7			P		158 43 15	Do.
	9 3 37	22 4 16	72 45 32	51 59	45 55½	R. 3	+0 30			V		159 30 15	Do.
				✱'s Alt.	Z. D. ☽'s L. L								
☉ — 5.	2 25 28	15 23 12	34 37 42	44 8	56 11½	D.	−2 45	30,15	48	K		158 13 30	☽ à Aldeb.
	2 25 28	15 23 12	34 36 52	44 8	56 11½	R. 1	−2 30			M		158 34 15	Do.
	2 36 34	15 34 16	34 42 20	42 58	54 35½	R. 1	−2 30			K		158 44 45	Do.
	2 36 34	15 34 16	34 43 57	42 58	54 35½	D.	−2 45			M		158 4 45	Do.
	2 47 16	15 44 56	34 49 12	41 58	53 3	R. 2	0 0			K		158 20 0	Do.
	2 47 16	15 44 56	34 49 45	41 58	53 3	R. 3	+1 0			M		158 6 15	Do.
	2 57 20	15 54 59	34 54 12	41 2	51 36½	R. 3	+1 0			K		158 11 45	Do.
	2 57 20	15 54 59	34 54 52	41 2	51 36½	R. 2	0 0			M		158 3 15	Do.
	3 8 56	16 6 33	35 0 17	40 12	49 57	B.	0 0			K		158 26 45	Do.
	3 8 56	16 6 33	35 59 52	40 12	49 57	R. 4	−1 30			M		158 45 30	Do.
	3 16 9	16 13 45	35 5 0	39 37	48 56	R. 4	−1 30			K		158 3 45	Do.
	3 16 9	16 13 45	35 3 45	39 37	48 56	B.	0 0			M		158 35 0	Do.
				Z. D. ☉'s L. L	Z. D. ☽'s L. L								
	6 43 40	19 40 40	60 13 0	69 54	23 0½	D.	−2 45	29,90	50	K		158 44 0	☽ à Sun.
	6 43 40	19 40 40	60 13 52	69 54	28 0½	R. 1	−2 45			M		159 2 45	Do.
	6 54 29	19 51 27	60 8 22	68 22	27 52	R. 1	−2 45			K		158 33 0	Do.
	6 54 29	19 51 27	60 8 11	68 22	27 52	D.	−2 45			M		158 29 45	Do.
	7 7 3	20 3 59	60 4 30	66 37	28 12	R. 2	0 0			K		159 3 0	Do.
	7 7 3	20 3 59	60 4 53	66 37	28 12	R. 3	+1 0			M		159 14 15	Do.
	7 47 33	20 44 33	59 48 7	61 12	29 9	R. 3	+1 0			K		158 58 30	Do.
	7 47 33	20 44 33	59 48 7	61 12	29 9	R. 2	0 0			M		158 58 30	Do.
	7 59 34	20 56 22	59 41 55	59 39	29 52	B.	0 0			K		158 24 15	Do.
	7 59 34	20 56 22	59 43 15	59 39	29 52	R. 4	−1 30			M		158 58 0	Do.
	8 14 35	21 11 20	59 37 25	57 52	30 58	R. 4	−1 30			K		159 6 0	Do.
	8 14 35	21 11 20	59 36 40	57 52	30 58	B.	0 0			M		158 45 15	Do.
	8 30 29	21 27 11	59 29 52	56 27	31 48½	D.	−2 45	29,90	52	K		158 50 15	Do.
	8 30 29	21 27 11	59 30 52	56 27	31 48½	R. 1	−2 45			P		159 17 15	Do.
	8 37 0	21 34 1	59 27 12	55 19	32 27½	R. 1	−2 45			K		158 51 30	Do.
	8 37 0	21 34 1	59 27 35	55 19	32 27½	D.	−2 45			P		159 1 45	Do.
	8 46 34	21 43 14	59 23 22	54 20	33 29	R. 2	0 0			K		158 44 45	Do.
	8 46 34	21 43 14	59 21 55	54 20	33 29	R. 3	+1 0			P		158 0 45	Do.
	8 54 14	21 50 52	59 19 45	53 32	34 11	R. 3	+1 0			K		158 34 15	Do.
	8 54 14	21 50 52	59 20 35	53 32	34 11	R. 2	0 0			P		158 56 45	Do.
☽ — 6.	2 45 1	15 41 51	49 20 0	41 55	63 22	D.	−2 30			K		158 33 30	☽ à Aldeb.
	2 48 11	15 41 51	49 19 40	41 55	63 22	R. 1	−2 45			M		158 41 45	Do.
	2 58 11	15 51 45	49 25 35	41 2	61 57	R. 1	−2 45			K		158 33 15	Do.
	2 58 11	15 51 45	49 25 15	41 2	61 57	D.	−2 30			M		158 42 30	Do.
	3 10 42	16 4 12	49 32 37	40 1	61 10	R. 2	0 0			K		158 31 0	Do.
	3 10 42	16 4 12	49 32 42	40 1	61 10	R. 3	+1 0			M		158 29 0	Do.
	3 19 55	16 13 29	49 37 37	39 29	58 50	R. 3	+1 0			K		158 32 0	Do.
	3 19 55	16 13 29	49 35 12	39 29	58 50	R. 2	0 0			M		158 13 15	Do.
	3 31 4	16 24 36	49 44 2	38 45	57 13½	B.	0 0			K		158 9 30	Do.
	3 31 4	16 24 36	49 45 [illegible]	38 45	57 13½	R. 4	−1 30			M		157 30 0	Do.
	3 38 24	16 31 55	49 49 12	38 20	56 10½	R. 4	−1 30			K		157 45 45	Do.
	3 38 24	16 31 55	49 45 2	38 20	56 10½	B.	0 0			M		158 15 0	Do.
				Z. D. ☉ L. L.	Z. D. ☽'s L. L.								
	7 56 49	20 49 [illegible]	45 0 4[illegible]	60 59	29 18	D.	−2 20	29,90	55	K		158 53 30	☽ à Sun.
	7 56 49	20 49	45 0 4[illegible]	60 59	29 18	R. 1	−2 45			M		158 53 30	Do.
	8 8 27	21 1 12	45 55 4	59 9	29 13½	R. 1	−2 45			K		158 35 45	Do.
	8 8 27	21 1 1	47 55 0	59 9	29 13½	D.	−2 30			M		158 18 30	Do.
	8 22 43	21 15 2[illegible]	45 49 5[illegible]	57 23	29 22	R. 2	+0 45			K		158 26 15	Do.
	8 22 43	21 15 2[illegible]	45 5[illegible]	57 23	29 22	R. 3	+1 0			M		158 32 45	Do.
	8 28 14	21 20 56	45 47 4	56 56	29 29½	R. 3	+1 0			K		158 45 0	Do.
	8 28 14	21 20 56	45 47 32	56 56	29 29½	R. 2	+0 45			M		158 41 45	Do.
				Z. D. ☉'s L. L.	Z. D. ☽'s U. L.								
♄ — 1[illegible]	1[illegible] 11 2[illegible]	3 26 5[illegible]	74 6 5[illegible]	65 59	77 21½	D.	−2 2	29,50	58	K		158 12 0	Do.
	1[illegible] 11 2[illegible]	3 26 5[illegible]	74 5 2[illegible]	65 59	77 21½	R. 1	−2 45			M		158 30 30	Do.

Obſervations at Kamtſchatka continued.

Lunar Obſervations at Kamtſchatka continued.

1779.	Time per Clock N° 1.	Apparent Time.	Diſtances obſerved.	Z-n. Diſt. of the ☉'s L. L.	Zen. Diſt. of the ☽'s U. L.	Sextant uſed.	Error of Sextant.	Barom.	Therm.	Obſerver	Latitude in.	Longitude deduced.	Phenomena and Remarks.
	H. ′ ″	H. ′ ″	° ′ ″	° ′	′		′ ″		°		° ′ ″	° ′ ″	
♄ Sept. 16.	15 40 42	3 56 7	74 16 35	69 54	76 10½	R. 1	−2 45	29,50	58	K	53 0 38 N	158 28 0	☽ a Sun.
	15 40 42	3 56 7	74 16 45	69 54	76 16½	D.	−2 2			M		158 23 45	Do.
	15 48 23	4 4 7	74 19 20	70 58	76 4	R. 4	+1 40			[illegible]		158 30 0	Do.
	15 48 23	4 4 7	74 19 15	70 58	76 4	R. 3	+1 0			M		158 34 15	Do.
	15 56 29	4 12 11	74 22 7	72 9	75 56	R. 3	+1 0			K		158 28 30	Do.
	15 56 29	4 12 11	74 22 25	72 9	75 56	R. 2	+1 40			M		158 19 0	Do.
	16 7 50	4 23 10	74 26 0	73 41	75 42	R. 3	+1 0			I		158 23 15	Do.
	16 7 50	4 23 10	74 26 0	73 41	75 42	R. 1	−2 45			P		158 23 15	Do.
					Z. D. ☽'s L.L.								
	16 14 50	4 30 9	74 28 5	74 41	74 41	R. 1	−2 45			T		158 32 0	Do.
	16 14 50	4 30 9	74 28 25	74 41	74 41	R. 3	+1 0			[illegible]		158 21 30	Do.
				Z D of ✱.	Z. D. ☽'s L.L								
♄ —25.	22 29 53	10 7 55	67 35 17	54 38	62 51	D.	−1 40	30,20	50	K		159 15 45	☽ à Aquilæ.
	22 39 47	10 17 47	67 38 2	55 47	62 4½	R. 1	−3 5			K		159 22 15	Do.
	22 48 10	10 26 9	67 42 37	56 48	61 28½	R. 2	+1 20			K		158 1 30	Do.
	22 57 5	10 35 3	66 44 20	57 55	61 53	R. 3	+2 0			K		158 38 15	Do.
	23 9 29	10 47 24	66 48 42	72 17	60 8	R. 3	+2 0			K		159 19 0	☽ à Aldeb.
	23 18 1	10 55 55	66 44 47	71 1	59 41	R. 1	−3 5			K		159 1 15	Do.
	23 26 9	11 4 2	66 42 10	69 48	59 18	R. 2	+1 40			K		159 15 30	Do.
	23 35 36	11 13 27	66 38 40	68 32	58 54	D.	−1 40			K		159 22 0	Do.
	23 51 46	11 29 34	67 58 47	65 14	58 23	R. 1	−3 5	30,24	51	K		159 22 30	☽ à Aquilæ.
	0 3 35	11 40 59	68 3 2	66 53	58 10	R. 2	+1 40			[illegible]		158 42 0	Do.
	0 14 20	11 52 4	68 5 37	68 28½	58 2	D.	−1 40			K		159 9 45	Do.
	0 22 55	12 0 38	68 8 17	69 44	57 58	R. 3	+2 0			K		158 57 0	Do.
☉ —26.	22 56 52	10 30 5	53 37 30	74 16	59 16	D.	−2 0	30,22	57	K		158 43 0	☽ à Aldeb.
	23 5 7	10 39 8	53 34 25	73 3	58 29½	R. 1	−3 15			K		158 45 15	Do.
	23 12 8	10 46 7	53 31 45	72 0	57 51	R. 2	+1 15			K		158 57 0	Do.
	23 18 29	10 52 27	53 28 10	71 4	57 18	R. 1	+1 0			K		158 29 15	Do.

A mean of the above 146 reſults = 158° 41′ 16″, Eaſt, for the longitude.

Meridian Zenith Diſtances obſerved at St. Peter and St. Paul by Captain King.

1779.	Obſerved Zenith Diſtances.	Zenith Diſtance correct.	Declination.	Latitude deduced.	Barom.	Therm.	Phenomena and Remarks.
	° ′ ″	° ′ ″	° ′ ″	° ′ ″		°	
♀ Aug. 27.	43 1 45	42 47 37,8	10 13 4,2 N	53 0 42	30,07	59	Sun.
☿ Sept. 1.	44 48 15	44 34 8,3	8 26 7,4	53 0 15,7	30,20	61	Do.
♃ —— 2.	45 10 30	44 56 26,2	8 4 18,0	53 0 44,2	30,17	64	Do.
♀ —— 3.	45 32 20	45 18 16,2	7 42 21,1	53 0 37,3	30,16	62	Do.
♄ —— 4.	45 54 40	45 40 36,8	7 20 16,1	53 0 52,9	30,11	64	Do.
☉ —— 5.	46 26 45	46 2 42,4	6 58 3,0	53 0 45,4	30,14	66	Do.
☽ —— 6.	46 38 50	46 24 48,0	6 35 43,7	53 0 31,7	29,98	57	Do.
♂ —— 7.	47 1 45	46 47 43,7	6 13 20,5	53 1 4,2	28,92	64	Do.
☿ —— 8.	47 24 10	47 10 9,5	5 50 48,2	53 0 57,7	29,98	63	Do.
♃ —— 16.	50 27 20	50 13 23,7	2 47 21,8	53 0 45,5	29,37	61	Do.
♀ —— 17.	50 50 45	50 36 49,8	2 24 8,8	53 0 58,6	29,43	57	Do.
☽ —— 20.	52 0 10	51 46 16,4	1 14 14,1	53 0 30,5	29,92	55	Do.
♃ —— 23.	53 10 40	52 56 48,3	0 4 3,5 N	53 0 51,8	29,14	52	Do.
♀ —— 24.	53 33 50	53 19 59,0	0 19 21,5 S	53 0 37,5	29,98	54	Do.

Obſervations at Kamtſchatka continued.

Meridian Zenith Diſtances obſerved at St. Peter and Paul continued.

1779.	Obſerved Zenith Diſtance	Zenith Diſtance correct.	Declination.	Latitude deduced.	Barom.	Therm.	Phenomena and Remarks.
	° ′ ″	° ′ ″	° ′ ″	° ′ ″			
☉ Sept. 26.	54 21 0	54 7 10,8	1 6 13 S	53 0 57,8	30,33	54	Sun.
☽ —— 27.	54 44 20	54 30 21,7	1 29 39	53 0 42,7	30,19	53	Do.
☿ —— 29.	55 31 0	55 17 13,5	2 16 29,5	53 0 44	30,15	53	Do.
♄ Oct. 2.	57 50 45	57 37 5,3	4 36 16,9	53 0 48,4	30,17	53	Do.
	42 53 4	42 54 56,8	10 5 26,9	53 0 23,7			γ } Aquilæ.
	44 40 38	44 42 34,3	8 17 57,6	53 0 31,9			α } Aquilæ.
	47 6 26,7	47 8 27,9	5 52 21,4	53 0 49,3	29,82	58	β } Aquilæ.
	66 7 47,5	66 10 55,8	13 10 35	53 0 20,8			1 α } Capricorni.
	66 10 15	66 13 23,4	13 12 51,9	53 0 31,5			2 α } Capricorni.
	8 28 45	8 29 53,5	44 30 9,8	53 0 3,3	29,84	56	α Cygni.
	8 36 40	8 37 28,6	61 39 29,4	53 1 0,8			α } Cephei.
	16 33 50	16 35 6,9	69 35 47,2	53 0 40,3	29,44	58	β } Cephei.
	6 2 50	6 3 56,9	59 3 56	53 0 0,0			ℓ } Caſſiope.
	9 32 50	9 33 59,5	62 34 20,3	53 0 20,8			ι } Caſſiope.

The above reſults of Stars are each a mean of three nights obſervations taken between the 1ſt and 7th of September.

By a mean of the above 28 reſults, the latitude of the Obſervatory is 53° 0′ 38″,9 North.

Azimuths obſerved by Lieutenant King.

1779.	Alt. of the ☉'s L. L.	Azimuths of the ☉'s Center.	Makers of the Compaſs.		Variation deduced.	Means.	Phenomena and Remarks.
	° ′	° ′			° ′	° ′	
♀ April 30.	17 52	S 85 33 W	Gregory.	½ round	6 9	6 8	5° 48′ 40″ E.
	17 28	85 5			6 7		
	16 58	86 0	Knight N° 1.	½ round	5 52	5 3	
	16 36	87 10			4 14		
	16 6	86 59	Martin.	½ round	6 3	6 15	
	15 51	86 55			6 27		
♃ May 3	12 28	S 87 10 W	Gregory.	½ round	6 28	6 14½	6° 5′ 20″ E.
	12 7	86 15			6 1		
	11 31	85 6	Martin.	½ round	5 50	6 14½	
	11 9	85 37			6 39		
	10 31	84 15	Knight N° 2.	½ round	6 7	5 47	
	10 12	83 9			5 27		

Obſervations at Kamtſchatka continued.

Azimuths obſerved by Lieutenant King and others.

1779.	Zen. Dist. of the ☉'s L. L.	Azimuths of the ☉'s Center.	Makers of the Compaſſes.		Variation deduced.	Means.	Phenomena and Remarks.
	° ′	° ′			° ′ ″	° ′ ″	
♀ May 28	65 20	S 86 37¼ W	Gregory.	½ round	6 28 30	6 35 47	6° 30′ 16″ E.
	65 55¼	87 8¼			6 42 55		
	66 46	88 8¼	Gregory.	½ round	6 1 45	6 24 50	
	67 7	88 36¼			6 47 55		
	Z.D. ☉'s U.L						
☉ Sept. 5.	64 5¼	N 80 51¼ E	Gregory.	½ round	6 55 5	6 54 12	6° 48′ 23″ E.
	63 50¼	81 17¼			6 47 20		
	63 7¼	82 32	Martin.	½ round	6 34 30	6 45 45	
	62 47	80 36			6 57 0		
	Z.D. ☉'s U.L						
☉ —— 3.	70 54	S 83 6 E	Gregory N° 1.	½ round	7 24	7 5 30	6° 20′ 0″ E.
	70 29¼	81 55			6 47		
	69 54	80 12	Knight N° 2.	½ round	5 58	6 9	
	69 30	70 58			6 20		
	68 32	77 37	Martin.	½ round	5 25	5 45 30	
	67 56	77 22			6 6		
♃ —— 8.	78 35	S 78 30 W	Gregory.	½ round	6 21	6 23	6° 38′ 20″ E.
	78 49	78 35			6 25		
	79 22	78 46⅓	Knight N° 2.	½ round	6 38	6 39 30	
	79 35	80 30			6 41		
	79 57	80 30	Martin.	½ round	6 49	6 52 30	
	80 14	81 2			6 56		
	Z. D. ☉'s L. L.						
♄ —— 25.	73 6	S 73 25 E	Gregory N° 1.	½ round	9 29	9 5	8° 21′ 20″ E.
	72 46	72 13			8 51		
	72 8	70 51	Martin.	½ round	8 31	7 11	
	71 45	67 25			5 51		
	71 16	69 30	Knight N° 2.	½ round	8 31	8 48	
	70 56	69 20			8 58		
	Z.D. ☉'s U.L.						
♀ —— 26.	68 35	S 52 12¼ W	Gregory N° 1.	½ round	4 32	4 22 30	3° 44′ 30″ E.
	69 2	53 25			4 13		
	71 11¼	57 37	Knight N° 2.	½ round	3 43	3 7	
	71 33	59 27			2 31		
	77 19	S 77 40 E	Gregory N° 1.	½ round	6 32	6 38	6° 31′ 10″ E.
	76 59	76 52¼			6 44		
	76 34	75 28	Knight N° 2.	½ round	6 0	6 12	
	76 21	75 36			6 24		
	75 33	74 36⅓	Martin.	½ round	6 38	6 43¼	
	75 20	74 25			5 49		

A mean of all the above results = 6° 18′ 40″ E. for the variation.

Obſervations made in the River Canton, China.

Captain Gore did not think it proper for me to go on ſhore with my Obſervatory, Inſtruments, &c. as the Chineſe might not like it. I therefore carried my Aſtronomical Quadrant and Watch on ſhore every morning and afternoon on a point of an iſland near the ſhip, far diſtant from any of the Chineſe habitations, and, as ſoon as I had done obſerving, packed up my Quadrant and carried it on board again; by this means I was able to make a few obſervations in the day only. W. B.

Equal Altitudes of the Sun.

1779.	Time of Noon per Watch uncorrect.	Half Interval of Obſervations.	Time of Noon per Watch correct.	Watch ſlow for Mean Time.	Daily Rate of Watch	Altitude.	Phenomena and Remarks.
	H. ′ ″	H. ′ ″	H. ′ ″	H. ′ ″	″		
♂ Dec. 7.	11 33 49,8	4 3 24	11 42 8,3	12 17 51,7	losing. 10,80	16	Sun.
♀ —— 10	11 34 41,8	4 15 6	11 41 35,9	12 18 24,1	9,56	16	Do.
☽ —— 13.	11 35 30,3	4 6 36	11 41 3,1	12 18 52,9	11,03	12	Do.
☽ —— 27.	11 39 58,8	4 4 3	11 38 32,7	12 21 27,3	10,10	8	Do.
☿ —— 29.	11 40 38,3	4 4 18	11 38 12,5	12 21 47,5		16	Do.
1780.							
☽ Jan. 3.	11 42 11,0	3 36 30	11 37 21,1	12 22 38,9	10,28	15	Do.
☿ —— 12.	This day altitudes were obſerved in the morning only, and the time computed from them. Whence the Watch N° 2. was ſlow for mean time at noon, $=12^h\ 24'\ 14'',3$, and rate ſince the 3d loſing 10″,06 per day. Between December 7th and January 12th it loſt 6′ 22″,6 on mean time, or at the rate 10″,6276 per day.						

By a mean of a number of obſervations of meridian altitudes of the Sun taken with my Aſtronomical Quadrant, and Hadley's Sextants, the latitude of the Typa is 22° 9′ 22″ North, and that of Macao harbour by the town 22° 12′ North.

The Typa is 3 miles South from the town, and it is one mile Weſt of it.

Obſervations made at the Typa.

Lunar Obſervations at the Typa.

1779.	Time per Watch N° 1.	Apparent Time.	Diſtances obſerved.	Altitude of the ☉'s L. L.	Altitude of the ☽'s U. L.	Sextant uſed.	Error of Sextant.	Barom.	Therm.	Obſerver.	Latitude in.	Longitude deduced.	Phenomena and Remarks.
	H. ′ ″	H. ′ ″	° ′ ″	° ′	° ′		′ ″				° ′ ″	° ′ ″	
24 Dec. 2.	8 15 43	20 43 6,2	57 41 33	24 36	65 6	R. 1	−1 20	30,17	63	B	22 9 22	113 53 0	☽ & Sun.
	8 20 58	20 48 21,0	57 39 40	25 32	64 48	B.	−1 20					113 53 0	Do.
	8 28 38	20 56 1,0	57 35 58	26 53	64 6		+0 30					113 44 0	Do.
	8 35 3	21 2 26	57 33 53	27 59	63 25		+0 30					113 24 15	Do.
				Z.D. ☉'s U.L.	Z.D. ☽'s U.L.								
♂ —28.	7 55 45	20 15 5	101 32 58	72 25	45 38		−0 30	30,24	68½			113 1 0	Do.
	8 1 34	20 20 54	101 30 40	69 40	47 0		−0 30					113 10 45	Do.
	8 10 43	20 30 3,2	101 28 17	68 1	49 0		−0 30					113 41 15	Do.
	8 15 53	20 35 13,2	101 26 10	67 5	50 9		−0 30					113 36 15	Do.
				Z.D. ☉'s L.L.									
♃ —29.	9 15 39	21 35 20	88 10 7	57 13	55 46		−0 30	30,18	65			113 36 30	Do.
	9 20 51½	21 40 32	88 8 7	56 17	56 55		−0 30					113 32 45	Do.
	9 30 1	21 49 42	88 4 27	55 8	58 55		−0 30					113 37 45	Do.
	9 34 21	21 54 2	88 2 46	54 32	59 53		−0 30					113 40 0	Do.
1780.				Z.D ☉'s U.L.	Z.D. ☽'s L.L.								
24 Jan. 13.	15 3 22	3 28 10	59 3 25	67 36	44 20		−0 30	30,19	64			113 15 15	Do.
	15 9 53	3 34 41	59 4 55	68 45	43 45		−0 30					113 27 30	Do.
	15 18 47	3 43 36	59 3 53	70 24	43 20		+1 0					113 49 30	Do.
	15 23 0	3 47 48	59 4 48	71 12	43 9		+1 0					113 49 0	Do.

A mean of the above reſults, together with many others taken a little before we came to the Typa, and a little after we left it, reduced to the Typa by means of the Watch N° 2. give its longitude 113° 37′ 15″ Eaſt.

Dips of the North Pole of the Magnetic Needle.

Mark End North. E.	Mark End North. W.	Mark End South. E.	Mark End South. W.	Mean Dip.	
° ′ ″	° ′ ″	° ′ ″	° ′ ″	° ′ ″	
27 3 48	26 52 36	27 4 24	27 1 36	27 0 36	On ſhore.
27 4 0	26 56 48	27 1 24	27 1 36	27 1 21	On board the ſhip.

Azimuths of the Sun's Center obſerved.

1779.	Zen. Diſt. ☉'s U. L.	Azimuths of the ☉'s Center.	Variation.		
	° ′	° ′	° ′		
Dec. 9.	80 28	S 59 59 E	0 33 W		Mean 0° 19′ Weſt variation.
			0 35	A ſecond ſet	
10.	70 50	S 54 39 W	0 19		
			0 7	A ſecond ſet	
12.	72 2	S 54 48 E	0 4		
13.	76 14	S 57 57 W	0 15		

Observations at the Typa continued.

On the full and change days it was high water in the Typa at 5^h 15′ apparent time, and at 5^h 50′ in the harbour of Macao; the water rose 6 feet 1 inch perpendicular at greatest. The flood appeared to come from the south eastward, but that is a little uncertain, it being hard to determine, on account of a great number of islands and broken land in the mouth of the river Canton.

Lunar Observations taken on board the Discovery when at Anchor in the Typa.

1779.	Apparent Time.	Distances observed.	Alt. of the Cent. comp. Alt. ☉ R ✱	Alt. ☉ ☽	Sextant used.	Error of Sextant.	Barom.	Therm.	Observers	Latitude. in.	Longitude deduced.	Phenomena and Remarks.
	H. ′ ″	° ′ ″	° ′	° ′		′ ″		°		° ′ ″	° ′ ″	
♃ Dec. 14	2 54 45	69 47 30	28 8	40 34	D.	−0 50	30,27	69	M	22 9 20	113 55 30	☽ à Sun.
	3 54 45	69 48 30	28 8	40 34	R. 1	+1 40			V		113 21 30	Do.
	3 54 45	69 48 52	28 8	40 34	R. 2	+0 45			T		113 8 45	Do.
	3 0 0	69 49 40	26 56	41 24	R. 1	+1 40			M		113 18 30	Do.
	3 0 0	69 48 22	26 56	41 24	D.	−0 50			V		114 1 45	Do.
	3 0 0	69 49 50	26 56	41 24	R. 3	+1 40			T		113 13 45	Do.
	3 0 0	69 50 45	26 56	41 24	R. 2	+0 45			G		112 43 45	Do.
	3 4 10	69 51 50	26 18	42 3	R. 3	+1 40			M		112 45 15	Do.
	3 4 10	69 50 20	26 19	42 3	R. 2	+0 45			V		113 34 45	Do.
	3 4 10	69 49 17	26 18	42 3	D.	−0 50			T		114 9 30	Do.
	3 8 22	69 51 12	25 35	42 41	R. 2	+0 45			M		113 42 15	Do.
	3 8 22	69 52 1	25 35	42 41	R. 3	+1 40			V		113 11 30	Do.
	3 8 22	69 52 2	25 35	42 41	R. 1	+1 40			T		113 11 30	Do.
	3 8 22	69 50 55	25 35	42 41	D.	−0 50			G		113 48 30	Do.
	6 27 16	63 10 1	12 17	47 25	D.	−0 50	30,27	55	M		114 29 15	☽ à α Arietis.
	6 33 56	62 57 22	23 54	46 38	D.	−0 50			Mo		113 21 45	Do.
	6 44 58	62 55 22	26 20	45 13	R. 2	+0 45			M		114 20 0	Do.
	6 50 27	62 54 5	27 37	44 23	R. 3	+1 40			M		114 27 0	Do.
♃ —28.	22 24 27	100 36 0	39 1	14 49	D.	−0 7	30,28	60	M		113 35 15	☽ à Sun.
	22 24 27	100 37 32	39 1	14 49	R. 1	+1 50			Mo		114 15 15	Do.
	22 24 27	100 36 5	39 1	14 49	R. 2	+0 10			T		113 35 15	Do.
	22 30 12	100 34 25	39 39	13 3	R. 1	+1 50			M		114 18 0	Do.
	22 30 12	100 32 55	39 39	13 30	D.	−0 7			Mo		113 35 15	Do.
	22 30 12	100 34 37	39 39	13 30	R. 3	+1 45			T		114 19 30	Do.
	22 35 32	100 29 12	40 10	12 16	R. 2	+0 10			M		113 35 30	Do.
	22 35 32	100 30 38	40 10	12 16	D.	−0 7			T		113 55 0	Do.
	22 41 1	100 27 50	40 43	10 57	R. 3	+1 45			M		114 2 0	Do.
	22 41 1	100 26 30	40 43	10 57	R. 2	+0 10			Mo		113 21 15	Do.
	22 41 1	100 28 45	40 43	10 57	R. 1	+1 50			T		114 25 30	Do.
♃ —29.	21 15 58	88 17 20	29 38	38 7	D.	−0 7	30,25	56	M		113 41 30	Do.
	21 20 44	88 17 5	30 24	37 5	R. 1	+1 5			M		114 24 45	Do.
	21 20 44	88 15 18	30 24	37 5	D.	−0 7			V		113 33 15	Do.
	21 32 8	88 12 5	32 9	34 36	R. 2	+0 35			M		114 9 15	Do.
	21 32 8	88 11 18	32 9	34 36	D.	−0 7			T		113 47 15	Do.
	21 33 21	88 8 41	33 4	33 10	R. 3	+1 45			M		113 39 0	Do.
	21 38 21	88 9 52	33 4	33 10	R. 1	+1 50			T		114 15 45	Do.
	21 38 21	88 8 2	33 4	33 10	R. 2	+0 3			Mo		113 23 30	Do.

A mean of the above 36 results, together with 14 taken in the Ottaq, and reduced to the Typa, gave its longitude 113° 48′ 34″ E.

Observations at Pulo Condore.

Lunar Observations by Captain King, and Officers.

1780.	Apparent Time. H. ′ ″	Distance observed. ° ′ ″	Alt. of Centers computed. Alt. of ☉ & ✱ ° ′	Alt. of ☽ ° ′	Sextant used.	Error of Sextant. ′ ″	Barom.	Therm. °	Observer.	Latitude in. ° ′ ″	Longitude deduced. ° ′ ″	Phenomena and Remarks.
24 Jan. 20.	10 20 36	38 14 17	58 4	70 33	D.	−0 30	30,03	74	K	8 40 0 N	106 29 30	☽ à Aldebaran.
	10 20 36	38 12 52	58 4	70 33	R. 1	+0 50			M		107 3 45	Do.
	10 26 45	38 15 27	56 39	71 7	R. 1	+0 50			K		106 55 45	Do.
	10 26 45	38 16 2	56 39	71 7	D.	−0 30			M		106 41 45	Do.
	10 36 54	38 18 52	54 12	71 50	R. 2	−0 30			K		107 1 0	Do.
	10 36 54	38 19 30	54 12	71 50	R. 3	+1 0			M		106 45 45	Do.
	10 42 25	38 21 5	52 52	72 0	R. 3	+1 0			K		106 56 15	Do.
	10 42 25	38 21 0	52 52	72 0	R. 2	−0 30			M		106 58 15	Do.
♄ — 23.	15 32 29	42 37 0	25 7	66 51	R. 1	+0 50	30,12	73	K		106 46 15	☽ à Pollux.
	15 32 29	42 38 45	25 7	66 51	D.	−0 30			M		106 5 30	Do.
	15 41 30	42 42 27	23 9	64 45	D.	−0 30			K		105 59 15	Do.
	15 41 30	42 41 35	23 9	64 45	R. 1	+0 50			M		106 20 30	Do.
	15 55 58	48 2 45	66 54	61 41	R. 1	+0 50			K		107 14 15	☽ à Spica Virginis.
	15 55 58	48 1 57	66 54	61 41	D.	−0 30			M		106 56 45	Do.
	16 2 48	47 57 46	67 59	60 7	D.	−0 30			K		106 25 0	Do.
	16 2 48	47 59 41	67 59	60 7	R. 1	+0 50			M		107 12 0	Do.
	16 9 43	47 52 20	68 50	58 19	R. 2	−1 0			K		105 28 15	Do.
	16 9 43	47 54 5	68 50	58 19	R. 3	+1 0			M		106 19 0	☽ à Regulus.
♂ — 25.	16 24 36	36 42 12	45 40	78 41	D.	−0 30	30,11	74	K		105 50 45	Do.
	16 24 36	36 41 50	45 40	78 41	R. 1	+0 40			M		106 0 15	Do.
	16 31 55	36 43 7	43 50	77 5	R. 1	+0 40			K		106 27 30	Do.
	16 31 55	36 44 40	43 50	77 5	D.	−0 30			M		105 47 0	Do.
	16 39 58	63 44 55	33 34	75 13	D.	−0 30			K		106 12 0	☽ à Antares.
	16 39 58	63 44 15	33 34	75 13	R. 1	+0 40			M		105 55 15	Do.
	16 47 4	63 42 0	34 56	73 38	R. 1	+0 40			K		106 6 45	Do.
	16 47 4	63 42 30	34 56	73 38	D.	−0 30			M		106 20 45	Do.
	16 55 52	63 38 27	36 40	71 31	R. 2	−1 30			K		105 58 0	Do.
	16 55 52	63 38 42	36 40	71 31	R. 3	+1 0			M		106 4 45	Do.
	17 2 4	63 36 5	37 42	69 58	R. 3	+1 0			K		106 1 15	Do.
	17 2 4	63 35 57	37 41	69 58	R. 2	−1 30			M		106 8 0	Do.
	17 9 6	36 56 22	34 48	68 28	R. 2	−1 30			K		106 30 0	☽ à Regulus.
	17 9 6	36 56 47	34 48	68 28	R. 3	+1 0			M		106 21 30	Do.
	17 15 29	36 58 57	33 15	66 53	R. 3	+1 0			K		106 23 15	Do.
	17 15 29	36 58 45	33 15	66 53	R. 2	−1 30			M		106 28 45	Do.
☿ — 26.	16 49 19	49 29 10	36 7	76 53	D.	−0 15	30,12	75	K		106 14 0	☽ à Antares.
	16 49 19	49 28 55	36 7	76 53	R. 1	+0 40			M		106 7 45	Do.
	16 55 14	49 26 12	37 15	76 23	R. 1	+0 40			K		105 54 15	Do.
	16 55 14	49 26 50	37 15	76 23	D.	−0 15			M		106 10 30	Do.
	17 2 41	49 23 30	38 36	75 27	R. 2	−1 30			K		105 53 45	Do.
	17 2 41	49 23 50	38 36	75 27	R. 3	+1 0			M		105 53 35	Do.
	17 8 30	49 21 20	39 38	74 35	R. 3	+1 0			K		105 53 15	Do.
	17 8 30	49 21 37	39 38	74 35	R. 2	−1 30			M		106 0 45	Do.
	20 26 53	107 20 26	58 50½	58 54	D.	−0 15	30,10	77	K		105 46 30	☽ à Sun.
	20 26 53	107 21 28	58 50½	58 54	R. 1	+0 40			M		106 16 15	Do.
	20 56 23	107 8 35	52 31	65 37	D.	−0 15			K		105 55 45	Do.
	20 56 23	107 9 42	52 31	65 37	R. 1	+0 40			M		106 26 0	Do.
	21 7 19	107 4 22	50 13½	68 7½	R. 1	+0 40			K		106 11 15	Do.
	21 7 19	107 3 39	50 13½	68 7½	D.	−0 15			M		105 51 15	Do.
	21 17 58	106 59 45	48 2	70 45½	R. 2	−3 30			K		106 20 45	Do.

A mean of all the above 49 results is = 106° 18′ 46″ East, the longitude of Pulo Condore.

Obſervations at Pulo Condore continued.

Lunar Obſervations, &c. by W. B.

In the entrance of the harbour I took the following obſervation for the longitude per Watch N°2.

1780.	Time per Watch, N° 2.	Apparent Time.	Diſtance obſerved.	Alt. of the ☉'s L. L.	Alt. of the ☽'s L. L.	Error of Sextant.	Barom.	Therm.	Latitude in.	Longitude deduced.	Phenomena and Remarks.
	H. ′ ″	H. ′ ″	H. ′ ″	° ′ ″	° ′	′ ″		°	° ′ ″	° ′ ″	
24 Jan. 22.	17 12 18	4 58 7		11 8 10		—0 40	30,30	75	8 42 0 N	106 31 15	E. by the Watch.
	0 8 39	11 54 29	38 47 28	36 9	67 18	+0 30	30,30	73	8 40 40	106 51 0	☽ à Aldebaran.
	0 18 21	12 4 10	38 50 42	34 47	65 50	+0 30				106 57 0	Do.
	0 24 49	12 10 38	38 53 30	32 22	64 48	+0 30				106 52 28	Do.
	0 32 16	12 18 9	38 56 42	30 29	62 31	+0 30				106 57 43	Do.
	0 47 33	12 33 23	42 10 27	71 2	60 57	—0 30	30,30	74		106 59 45	☽ à Regulus.
♀ — 21.	0 57 47	12 43 37	42 5 17	72 29	58 59	—0 30				106 49 15	Do.
	0 57 48	12 40 31	54 22 17	23 19	70 45	—1 30	30,20	76		106 50 0	☽ à Aldebaran.
	1 3 27	12 49 10	54 58 15	21 55	70 17	—0 30				107 0 45	Do.
	1 8 6	12 53 49	54 25 37	20 57	69 22	—0 30				107 4 22	Do.
	1 12 49	12 58 32	55 2 13	19 45	69 0	—0 30				106 47 45	Do.
				Z.D. ☉ U.L.	Z.D. ☽ U.L.						
☿ — 26.	8 42 16	20 27 4½	107 21 18	58 55	58 50	+0 30	30,10	78		106 28 30	☽ à Sun.
	9 12 5	20 56 53½	107 9 1	52 27	65 28	+0 30				106 31 0	Do.
	9 24 19	21 9 7½	107 3 57	49 53	68 33	—0 30				106 41 45	Do.
	9 33 29	21 18 17½	107 0 0	48 1	70 47	—0 30				106 24 15	Do.
				✳'s Alt.	Alt. ☽ Cen.						
	4 56 27	16 41 19	64 41 52	40 4	69 43	—1 30	30,14	76		106 29 30	☽ à Regulus.
	5 12 45	16 57 37	64 46 2	36 7	71 27	—0 30				106 30 30	Do.
	5 3 27	16 48 19	35 46 10	36 16	70 35	—0 30				106 25 0	☽ à Antares.
	5 18 7	17 2 59	35 56 52	38 56	71 55	—1 30				107 1 45	Do.
				Alt. ☉ Cen.	Alt. ☽ Cen.						
	9 21 33	21 6 29	94 34 13	39 25	31 45	—0 30	30,16	76		106 46 45	☽ à Sun.
	9 25 57	21 10 53	94 21 18	40 19	30 46	—0 35				106 36 45	Do.
	9 38 22	21 23 18	94 27 48	42 53	27 50	—0 30				106 46 45	Do.
	9 40 19	21 25 15	94 26 15	43 16	27 26	—0 30				106 25 0	Do.

A mean of the above results is = 106° 44′ 29″ E. for the longitude.

Meridian Obſervations for the Latitude.

21. Obſerved the meridian altitude of the Sun's L. L. above the horizon of the ſea, the eye being elevated 9 feet.

	° ′		° ′ ″	
	61 8 Z.D. ☉ U.L.	latitude =	8 39 55 N.	this is a mean of the results of 3 Sextants.
26.	27 12	latitude =	8 40 59 N.	*Note.* 38″ muſt be added to each zenith diſtance for the correction of the line of collimation.
27.	26 56½	latitude =	8 40 36 N.	

The Dip of the North Pole of the Magnetic Needle was obſerved to be 2° 1′ and its Variation 0° 14′ Weſt.

On the full and change days it was high water at 4ʰ 16′ apparent time, from which time the water continued at a ſtand for 12 hours without any material alteration, viz. till 4½ in the morning, or 16¼ hours apparent time, when it begun to ebb, and at 22¼ʰ apparent time it was low water. The change from ebbing to flowing was very quick, or in leſs than 5 minutes. The water roſe and fell 7 feet 4 inches perpendicular, every day the ſame while we lay there. The time of high water fell back every day about 50′ or 55′ minutes, or nearly at the uſual rate.

W. B.

Obſervations at the Cape of Good Hope.

1780.
♃ April 13 Went on ſhore with my inſtruments in order to get them conveyed to the Cape Town, but found the road ſo very rough and ſtony, that there was great danger of breaking ſome of them, eſpecially the clock. Captain Gore had informed me that he intended to put to ſea as ſoon as the ſhip's rudder was repaired, which I was informed would be in eight or ten days at moſt; whence I thought it moſt adviſable to ſet up the inſtruments at Falſe Bay.

☿ — 14 In the morning ſet my aſtronomical clock a-going, with the ſame length of pendulum as when going at Greenwich; alſo ſet up the tranſit inſtrument, &c.

♄ — 15. One of the piles that ſupported the ſtand of the clock ſunk in the ſand, and the clock ſtopped; put it upright, and ſet it going again.

☉ — 16. Begun to obſerve equal altitudes as follow,

	Time of Noon per Clock uncorrect.	Half Interval of Obſervations.	Time at Noon per Clock correct.	Clock ſlow for Sidereal Time.	Daily Rate of Clock.	No. of Obſervations.	Phenomena and Remarks.
	H. ′ ″	H. ′ ″	H. ′ ″	′ ″	′ ″		
☽ — 17.	1 39 31,1	3 17 6	1 39 43,2	0 28,58	Loſing. 1 4,74	20	Sun.
♂ — 18.	1 42 10,5	3 22 33	1 42 22,48	1 33,32	1 3,90	14	Do.
♀ — 19.	1 44 49,4	2 27 38	1 45 1,20	2 37,20	1 2,87	10	Do.
♃ — 21.	1 47 29,9	3 41 43	1 47 42,33	3 39,07	1 1,93	20	Do.
☿ — 22.	1 52 53,6	3 27 31	1 53 5,67	5 42,93	1 3,27	16	Do.
♄ — 23.	1 55 34,8	3 32 19	1 55 46,70	6 46,20	1 2,84	16	Do.
	1 58 16,4	3 29 3	1 58 28,66	7 49,04	1 1,07	9	Do.
☉ — 24.	2 11 1,5	3 14 1	2 11 12,89	Faſt. 1 9,89		16	Do.
	In the forenoon of this day moved the minute hand of the clock forward 10 minutes without altering it otherwiſe.						
☽ — 25.	2 13 44,8	3 35 2	2 13 57,12	Faſt. 0 8,40	1 1,49	12	Sun. The pendulum vibrated
♄ — 29.	2 24 47,8	3 16 32	2 24 58,96	Slow. 3 58,14	1 1,63	14	Sun. from 1° 32′ to 1° 36′
☽ May 1.	2 30 21,2	3 35 26	2 30 32,39	6 2,31	1 2,08	18	Sun. on each ſide (o)
♀ — 5.	2 41 36,1	3 25 40	2 41 46,85	10 9,35	1 1,76		

Observations at the Cape of Good Hope continued.

Computation of the Rate of the Watch, N° 2.

1780.	Time per Watch	Time per Clock.	Clock fast for Watch.	Difference.	Intervals of Comparisons	Watch loses on Clock in 24 H.	Clock loses on Sidereal Time.	Watch loses on Sidereal Time.	Watch losing on Mean Time	
	H. ′	H. ′ ″	H. ′ ″	′ ″	H. ′	′ ″	′ ″	′ ″	″	
April 16.	18 1	1 50 26	7 49 26	3 1½	23 49	3 2,89	1 4,74	4 7,63	11,13	
17.				6 3						
18.	17 39	1 34 29	7 55 29	3 1½	23 49	3 2,89	1 3,91	4 6,79	10,29	
19.	18 8	2 6 37	7 58 37	3 8	24 29	3 4,35	1 1,87	4 6,22	9,72	
20.	18 2	2 3 40	8 1 44	3 3	23 54	3 3,75	1 1,92	4 4,68	8,18	
21.	17 58	2 2 44	8 4 44	3 4	23 56	3 4,48	1 1,93	4 6,4[illegible]	9,91	
22.	17 58	2 5 47	8 7 47	3 3	24 0[illegible]	3 3,00	1 3,27	4 6,27	9,77	
23.	18 0	2 10 52	8 10 52	3 5	24 2	3 4,76	1 2,84	4 7,60	11,10	
24.	18 6	2 29 56	8 23 56	3 4	24 6	3 3,25	1 1,70	4 4,95	8,45*	
25.	17 56	2 22 59	8 26 59	3 3	23 50	3 4,27	1 1,49	4 5,76	9,26	
26.	17 54	2 24 2	8 30 2	3 3	23 58	3 3,24	1 2,33	4 5,57	9,07	
27.	17 55	2 28 6+	8 33 6+	3 4+	24 1	3 3,88	1 1,63	4 5,51	9,01	
28.	17 58	2 34 10	8 36 10	3 4—	24 3	3 3,63	1 1,63	4 5,26	8,76	
29.	17 55	2 34 14	8 39 14	3 4	23 57	3 4,37	1 1,63	4 6,00	9,50	
30.	17 41	2 23 17	8 42 17	3 3	23 46	3 4,38	1 2,08	4 7,86	11,36	
May 1.	17 57	2 42 22	8 45 22	3 5	24 16	3 3,00	1 2,08	4 5,08	8,58	
2.	17 41	2 29 24	8 48 24	3 2	23 44	3 4,00	1 2,00	4 6,00	9,50	
3.	17 54	2 45 30	8 51 30	3 6	24 13	3 4,36	1 2,00	4 6,36	9,86	
4.	17 47	2 41 35	8 54 35	3 5	23 53	3 5,85	1 1,76	4 7,61	11,11	
5.	17 56	2 53 42	8 57 42	3 7	24 9	3 5,85	1 1,76	4 7,61	11,11	

* Set the minute hand of the clock forward 10 minutes.

A mean of the above rates is 9″,77 losing per day on mean time.

By taking the comparison of the 16th of April, and that of the 5th of May, the Watch lost 3′ 1″,18 in 19 days; or at the rate of 9″,535 per day on mean time.

1780.
April 17. Set up the transit instrument, its stand being set firm in the ground.
18. Cleaned the glasses and adjusted the line of collimation of the telescope, levelled the axis, &c. and by the transit of Procyon, brought it near the meridian.

	Times by the Clock N° 2.					Phenomena and Remarks.
	First Wire	Second Wire.	Middle Wire.	Fourth Wire	Fifth Wire.	
	′ ″	′ ″	H. ′ ″	′ ″	′ ″	
♂ —— 18.		53 6½	9 53 50	54 35+		Regulus.
	43 24+	44 9-	13 45 3½	45 39		☽ 1 L. } She being full.
		46 25-	13 47 10-			☽ 2 L. } She being full.
	1 10+	1 55½	12 2 41½	3 28⅓	13 7	Arcturus.

Obſervations at the Cape of Good Hope continued.

Obſerved Times of the Tranſits of the Sun, Moon, and Stars over the Meridian.

1780. ♃ April 19. In the morning ſet up a meridian mark half a mile diſtant from the inſtrument, not being able to diſcover any well defined object on the diſtant hill at that time; the inſtrument was adjuſted to this mark till the 23d.

	Times by the Clock N° 2.					
	First Wire.	Second Wire	Middle Wire.	Fourth Wire.	Fifth Wire.	Phenomena and Remarks.
	′ ″	′ ″	H. ′ ″	′ ″	′ ″	
	45 18	46 1½	1 46 46—	47 31½		☉ 1 L.
	47 28	48 12—	1 48 56½	49 41	50 24+	☉ 2 L.
		51 38+	9 52 32½	53 7½	53 50½	Regulus.
			13 9 35+	10 19+	11 2½	Spica Virginis.

Emer. 1ſt Satellite of Jupiter at 13^h 42′ 10″ per clock, or 11^h 53′ 6″ appar. time. This ſeemed certain to 5′ or 6″ the air being clear.

The teleſcope uſed was an achromatic one, made by Dollond, of 46 inches focus, magnifying 150 times.

	0 8½	0 53+	14 1 39½	2 27+	3 13—	Arcturus.
	38 56+	39 41+	14 40 27+	41 13+	41 59	☽ 2 L.
♃ — 20.	50 19	51 2½	9 51 47+	52 32½	53 15½	Regulus.
			11 58 20			δ } Crucis.
	6 11½	7 42½	12 9 14+	10 47½	12 17½	α } Crucis.
			12 13 51+	15 9½	16 25+	γ } Crucis.
		28 21+	12 29 45+	31 9½		β } Crucis.
		59 52+	14 0 38½	1 26—	2 10+	Arcturus.
	33 38+	34 24+	15	36 0½	36 45⅝	☽ 2 L.
♀ — 21.	50 40½	51 24½	1 52 10—	52 54+		☉ 1 L.
		53 36—	1 54 20+	55 5½	55 47½	☉ 2 L.
		6 48½	13 7 31½	8 12+		Spica Virginis.
		58 49—	13 59 35+	0 22½		Arcturus.
♄ — 22.	53 22½	54 7—	1 54 51½	53 35½		☉ 1 L.
		56 18+	1 57 2½	57 47½	58 30½	☉ 2 L.
		47 55½	9 49 42½	50 27½	51 12	Regulus.
		5 45+	13 6 28½	7 13		Spica Virginis.
			13 41 3½	42 31+	43 54½	β Centauri.
	57 1½	57 46+	13 58 33+	59 20+	59 45—	Arcturus.
	14 32	15 56½	14 17 23+	18 50½	20 16—	α Centauri.
			16 8 39½	9 27½	10 13½	Antares.
	27 0½	27 48+	17 28 38½	29 29—	30 16½	☽ 2 L.

When I examined the adjuſtment of the tranſit inſtrument, found it a little weſt of the meridian mark; I examined the poſt on which the mark was fixed, but did not perceive it to be moved or any ways diſturbed, therefore concluded that the error lay in the inſtrument, and re-adjuſted it to the mark as it then ſtood.

☉ — 23.	55 59—	56 44	1 57 28	58 13½		☉ 1 L.
		58 55+	1 59 40+	0 25½		☉ 2 L.

By the above tranſit of the Sun I find the poſt that carries the meridian mark had been moved ſomewhat eaſterly, which being nearer the meridian I let it remain.

Observations at the Cape of Good Hope continued.

Observed Times of the Transits continued.

1780.	Time by the Clock N° 2. First Wire.	Second Wire.	Middle Wire.	Fourth Wire.	Fifth Wire.	Phenomena and Remarks.
	′ ″	′ ″	H. ′ ″	′ ″	′ ″	
☉ April 23.			16 7 34½	8 24+	9 9½	Antares.
	14 53+	15 37—	17 16 21½	17 6—	17 50+	α Ophiuchi.
		22 36½	18 23 25½	24 15+		A ✱ about 5th or 6th mag. and about 30′ S. of the ☽
		24 53	18 25 42½	26 34		☽ 2 L.
		26 29½	18 30 18	31 7½		A small Star.
		32 19+	18 33 8	33 57		A ✱ about 4th or 5th mag. and about 20′ N. of the ☽
		26 36½	19 27 20+	28 5+		γ
	30 8	30 51	19 31 34+	32 19½	33 2—	α } Aquilæ.
		35 18+	19 36 2	36 46+		β
☽ — 24.	In the morning moved the minute hand of the Clock forward 20 minutes, without altering it otherwise.					
	8 43—	9 27+	2 10 12	10 57		☉ 1 L.
			2 12 24+	13 9½	13 52½	☉ 2 L.
	In the afternoon found the meridian mark quite displaced by a cow rubbing her side against it; I found a mark on a distant hill near the north meridian, to which the instrument was constantly adjusted during my stay.					
		16 55—	9 17 38½	18 23		α Hydra.
	55 58½	56 42+	9 57 27—	58 12½		Regulus.
		13 36+	13 14 20½	15 5½	15 48+	Spica Virginis.
	46 30+	47 54+	13 49 19+	50 46—	52 8½	β } Centauris.
		24 11	14 25 37+	27 5		α
	Emer. of the 3d Satellite of Jupiter at 14h 59′ 7″ per clock, or 12h 46′ 30″ apparent time, certain to about 4 or 5 seconds, the air being very clear. The telescope used was a Dollond's Achromatic of 46 inches focus, magnifying power 150 times.					
		15 45½	16 16 34+	17 22½	18 8½	Antares.
	49—	30 37½	19 31 27	32 17½	33 6½	☽ 2 L.
		35 28+	19 36 12	36 56½		γ
	39 0½	39 43	19 40 26½	41 11+	41 54—	α } Aquilæ.
		44 11	19 44 54	45 38½		β
♂ — 25.	11 20	12 4½	2 12 49—	13 34—		☉ 1 L.
		14 15½	2 15 0	15 45		☉ 2 L.
		34 24½	19 35 9	35 53+		γ
	37 56½	38 40—	19 39 24	40 8—	40 51—	α } Aquilæ.
		43 7+	19 43 51	44 35—		β
	3 19—		20 4 48—	5 28	6 16	1 α } Capricorni.
	3 43	4 27	20 5 11½	5 53+	6 40×	2 α
	23 11—	23 58	20 24 47×	25 26+		☽ 2 L.
	31 8½	32 8—	20 33 9	34 10½	35 10	α Cygni.
♃ — 26.	14 3½	14 47—	2 15 32—	16 17+		☉ 1 L.
		16 59+	2 17 44½	18 29+	19 12½	☉ 2 L.

Obſervations at the Cape of Good Hope continued.

Obſerved Times of the Tranſits continued.

1780.	First Wire.	Second Wire.	Middle Wire.	Fourth Wire.	Fifth Wire.	Phenomena and Remarks.
	′ ″	′ ″	H. ′ ″	′ ″	′ ″	
♃ April 27.	16 48	17 31½	2 18 16½	19 2—		⊙ 1 L.
		19 44	2	Cloudy.		⊙ 2 L.
	13 5—	13 48½	9	15 16+	15 59—	α Hydræ.
		53 36½	9 54 21—	55 6½	55 49+	Regulus.
	33 59½	34 43	11 35 28+			β Leonis.
		10 50	12 12 17½	13 50½		α Crucis.
	9 46½		13 11 15—	11 58½	12 40½	Spica Virginis.
			19 33 5+	33 50½	34 33+	γ } Aquilæ.
		36 37½	19 37 20½	38 5+	38 48+	α } Aquilæ.
	40 21½	41 4½	19 41 48+	42 32½		β } Aquilæ.
	1 16+	1 59½	20 2 44	3 30+	4 13+	α 1 } Capricorni.
	1 40—	20 24—	20 3 8½	3 49	3 36½	α 2 } Capricorni.
☿ —— 28.	19 33+	20 17	2 21 3—	21 48		⊙ 1 L.
		22 29+	2 23 14½	24 0—	24 43½	⊙ 2 L.
	47 22+	48 7	22 48 52+	49 38—	50 21½	☽ 2 L.
	Zen. Diſt. ☽'s L. L. = 21° 2′ 45″ Bar. = 29,89 Therm. = 72°.					
♄ —— 29.	22 19—	23 2+	2 23 48	24 32 ×		⊙ 1 L.
		25 14½	2 25 59½	26 44½	27 28½	⊙ 2 L.
☽ May 1.	27 53	28 37—	2 29 22	30 7½		⊙ 1 L.
		49½	2 31 34	32 20½	33 4—	⊙ 2 L.
		49 29—	9 50 13½	50 59—	51 42—	Regulus.
♂ —— 2.	47 43+	48 27—	9 49 12—	49 56—	50 40	Do.
	4 38	5 21+	13 6 4½	6 50—	7 32½	Spica Virginis.
	38 12	39 26+	13 41 2	42 29½	43 51	β Centauris.
		57 15½	13 58 1+	58 48½	55 33+	Arcturus.
☿ —— 3.	33 28—	34 12½	2 34 58	35 44		⊙ 1 L.
		36 25½	2 37 11—	37 56½	38 40	⊙ 2 L.
	14 28	15 53+	14 17 20+	18 47	20 12	α Centauris.
♃ —— 4.	45 41+	46 25	9 47 9½	47 55—	48 38—	Regulus.
	2 25½	3 18½	13 4 3+	4 48—	5 30+	Spica Virginis.
	54 27	55 12	13 55 59—	56 46—	57 31—	Arcturus.

♀ —— 5. Emerſion of the firſt Satellite of Jupiter at 12^h 55′ 37″ per clock, or 10^h 12′ 40″½ apparent time, uſed a Dollond's achromatic teleſcope of 46 inches focus, magnifying power 150 times.

In the morning packed up all my inſtruments, having received orders from Captain Gore to get every thing on board.

Obſervations at the Cape of Good Hope continued.

Some Obſervations of an Eclipſe of the Sun at Falſe Bay.

1780.
☽ May 1. Examined the micrometer, and adjuſtments of the eye tubes.

Meaſured the Sun's horizontal diameter as follow,

Inches.	Nonius.		Inches.		
4,	$8\frac{1}{2}+8\frac{1}{2}$	I.	4,	$8\frac{1}{2}+8$	I.
	9			$9\frac{1}{3}$	
	$8\frac{2}{3}$	4, $8\frac{1}{2}+8,73=$		$9\frac{1}{2}$	4, $8\frac{1}{2}+8,72=31'\ 38''\ 14\frac{1}{2}=$ ⊙'s diamet.
	$8\frac{1}{2}$	—		$8\frac{1}{6}$	
	$8\frac{1}{8}$	$=31'\ 38''\ 15'''$		8	
	$9\frac{1}{4}$	the ⊙'s diamet.		9	

The above meaſures of the Sun's diameter were reduced to minutes and ſeconds, &c. by the table I had conſtructed when at Tongotaboo.

♃ —— 4. From the firſt to the fourth the weather was hazy and dull; the fourth in the morning the weather was fine and free from clouds; I got my teleſcope ready, and computed the part of the Sun's limb where the eclipſe would begin, and the time by the clock nearly.

At 11 o'clock the ſky became overcaſt with thick clouds, which continued ſo until half paſt twelve, or noon, when the clouds began to clear away; at $3^h\ 52'\ 25''$ per clock, or $1^h\ 11'\ 15''$ apparent time, I ſaw the Sun through thin clouds with the finder of the teleſcope, and could perceive a ſmall impreſſion of black on its limb; by noting its increaſe, I ſuppoſe the eclipſe began about 2′ or $2'\frac{1}{2}$ before I ſaw it. It was a conſiderable time before the clouds cleared away ſo as to enable me to make uſe of the micrometer.

Meaſures with the Micrometer.

Time per Clock.	Apparent Time	Diſtances of the Cuſps in Parts of the Micrometer Scale.	Time per Clock.	Apparent Time.	Verſed Sines of the uneclipſed Part, in Parts of the Micrometer Scale.
H. ′ ″	H. ′ ″	Inches. Nonius.	H. ′ ″	H. ′ ″	Inches. Nonius.
4 28 50	1 49 35,3	3, $9\frac{1}{2}$ + 9	4 48 39	2 9 21,7	1,8 + 5
4 30 16	1 51 1,2	4,0 + 12	4 49 52	2 10 34,6	1, $7\frac{1}{2}$ + 3
4 31 19	1 52 4,0	4, $0\frac{1}{2}$ + 1	4 51 0	2 11 42,5	1,7 + 0
4 32 2	1 52 46,6	4, $0\frac{1}{2}$ + 19	4 51 54	2 12 36,4	1, $6\frac{1}{2}$ + 2
4 33 39	1 53 22,6	4,1 + $12\frac{1}{2}$	4 52 57	2 13 39,3	1,6 + 3
4 34 58	1 55 42,7	4, $1\frac{1}{2}$ + 6	4 54 12	2 14 54,1	1,5 + 18
4 38 0	1 58 44,0	4, $2\frac{1}{2}$ + 0	4 55 46	2 10 28,0	1, $4\frac{1}{2}$ + 5
4 39 11	1 59 53,9	4, $2\frac{1}{2}$ + 19	4 56 44	2 17 25,8	1,4 + 7
4 40 6	2 0 48,8	4,3 + 3	4 58 49	2 19 30,6	1,3 + 6
4 41 14	2 1 56,6	4,3 + 20	4 59 51	2 20 32,5	1, $2\frac{1}{2}$ + 10
4 42 10	2 2 52,5	4, $3\frac{1}{2}$ + 6	5 0 58	2 21 39,4	1,2 + 6
4 43 37	2 4 20,4	4, $3\frac{1}{2}$ + 20	5 1 52	2 22 33,3	1, $1\frac{1}{2}$ + 8
5 34 36	2 55 13,4	4,7 + 16		Cloudy.	

Obſervations at the Cape of Good Hope continued.

Meaſures with the Micrometer continued.

Time per Clock.	Apparent Time.	Diſtances of the Cuſps in Parts of the Micrometer Scale.	Time per Clock.	Apparent Time.	Verſed Sines of the uneclipſed Part in Parts of the Micrometer Scale.
H. ′ ″	H. ′ ″	Inches. Nonius.	H. ′ ″	H. ′ ″	Inches. Nonius.
5 36 7	2 56 42,3	4,7 + 8	5 23 14	2 43 52,7	0,5½ + 21
5 37 29	2 58 6,1	4,7 + 2	5 27 0	2 47 38,3	0,6½ + 6
5 38 19	2 58 56,0	4,7 0	5 30 3	2 50 41,0	0,7½ + 17
5 39 24	3 0 1,9	4,6½ + 17	5 31 5	2 51 42,9	0,8 + 8
5 40 40	3 1 17,8	4,6½ + 11	5 49 29	3 10 4,8	1,6½ + 24
6 19 15	3 39 47,4	3,5 + 2	5 50 41	3 11 16,7	1,7½ + 7
6 20 26	3 40 58,3	3,4½ + 7	5 52 1	3 12 36,6	1, 8 + 16
6 21 20	3 41 52,2	3,4 + 1	5 52 50	3 13 25,5	1,8½ + 13
6 22 11	3 42 43,1	3,3½ + 1	5 53 24	3 13 59,4	1,9 + 2
6 22 56	3 43 28,1	3,3 + 6			
6 23 34	3 44 6,2	3,2½ + 11			

Clouds came over the Sun, which prevented my taking any more meaſures with the Micrometer. About 10 minutes before the end of the eclipſe the Sun became free from clouds, and very clear. I obſerved the end at 6^h 45′ 3″ per Clock, or 4^h 5′ 32″, 6 apparent time.

Mr. Bligh, the Maſter, obſerved the end at 6^h 45′ per Clock, or 4^h 5′ 29″, 6 apparent time.

Mr. Bligh uſed a 2 feet Gregorian Teleſcope made by Bird, magnifying power 90 times.

My Teleſcope was an Achromatic one made by Dollond of 46 inches focus, magnifying power 150 times. The time of the end ſeemed certain to 3 or 4 ſeconds.

From whence the long. of Falſe Bay $= 1^h$ 13′ 23″, or 18° 20′ E. by uſing Maſon's new Tables of the Moon.

*** There being no correſponding obſervation made at Greenwich, the above long. may not be ſo accurate as that deduced from the obſervations of the tranſit of Venus. W. B.

Meridian Zenith Diſtances of the Sun and Stars.

1780.	Obſerved Zenith Diſtance.	Zenith Diſt. of the ☉'s Center.	Declination.	Latitude. deduced.	Barom.	Therm.	Phenomena and Remarks.
	° ′ ″	° ′ ″	° ′ ″	° ′ ″		°	
☉ April 16.	44 19 25	44 36 14	10 25 0 N	34 11 14 S	30,15	73	Sun.
♀ —— 21.	46 2 34	46 19 25	12 8 28	34 10 57	30,16	75	Do.
♄ —— 22.	46 22 40	46 39 31	12 28 32	34 10 59	30,21	74	Do.
☉ —— 23.	46 42 41	46 59 30	12 48 28	34 11 2	30,27	69	Do.
☽ —— 24.	47 2 13	47 19 1	13 8 9	34 10 52	30,24	73	Do.
♂ —— 25.	47 21 56	47 38 44	13 27 37	34 11 7	30,22	75	Do.
☿ —— 26.	47 40 51	47 57 39	13 46 48	34 10 51	30,25	73	Do.
♃ —— 27.	48 0 10	48 16 58	14 5 49	34 11 9	30,04	67	Do.
☽ May 1.	49 13 36	49 30 20	15 19 32	34 10 48	30,21	74	Do.
☿ —— 3.	49 49 19	50 6 5	15 44 54	34 11 11	30,01	63	Do.

Mean of all by the Sun = 34° 11′ 1″ South.

Obſervations at the Cape of Good Hope continued.

Stars South of the Zenith.

1780.	Zenith Diſtance obſerved.	Zenith Diſtance correct.	Declination.	Latitude deduced.	Barom.	Therm.	Phenomena and Remarks.
	° ′ ″	° ′ ″	° ′ ″	° ′ ″		°	
⊙ May 21.	23 20 5	23 20 28	57 31 15 S	34 10 47 S			δ
	27 41 7½	27 41 35½	61 52 40	34 11 5			α Crucis.
	21 41 5	21 41 26	55 52 34	34 11 8	30,11	74	γ
	24 17 24	24 17 48	58 28 54	34 11 6			β
	25 6 22½	25 6 48	59 17 48	34 11 0			β Centauris.
	25 43 30	25 43 57	59 55 7	34 11 10			α

Mean =34° 11′ 3″ South.

Note, All the Stars were obſerved between the 21ſt and 26th, and are each a mean of 3 obſervations.

Stars North of the Zenith.

1780.	Zenith Diſtance obſerved.	Zenith Diſtance correct.	Declination.	Latitude deduced.	Barom.	Therm.	Phenomena and Remarks.
	° ′ ″	° ′ ″	° ′ ″	° ′ ′		°	
	26 27 36	26 28 6	7 42 55 S	34 11 1 S			α Hydræ.
	47 12 17	47 13 16	13 2 5 N	34 11 11			Regulus.
	49 57 48	49 58 52	15 48 4	34 10 48	30,10	73	β Leonis.
	24 10 24	24 10 49	10 0 33 S	34 11 21			Spica Virginis.
	54 30 29	54 31 45	20 20 3 N	34 11 42			Arcturus.

Mean 34° 11′ 12″, 6 South.

A mean of the whole is 34° 11′ 5″ South, for the latitude.

Azimuths obſerved at Falſe Bay.

1780.	Zen. Diſt. ⊙'s U.L.	Azimuths of the ⊙'s Center.	Variation.	Remarks.
	° ′	° ′	° ′	
May 20.	69 20	N 36 50 W	21 58 W	
	74 14	N 85 50 E	22 29	
	73 29	84 27	21 53	
	65 8	76 36	22 40	
21.	69 18	N 35 56 W	22 24	Mean variation 22° 16′ Weſt.
	76 25	36 45	22 30	
	75 48	N 87 24 E	22 25	
	70 7	86 37	22 5	
22.	69 42	N 36 39 W	21 57	

The above were obſerved with a Compaſs of Knight's conſtruction, and are a mean of ſix or more each.

Obſervations at the Cape of Good Hope continued.

Dip of the South End of the Needle.

Mark End North. E.	Mark End North. W.	Mark End South. E.	Mark End South. W.	Dip.	
° ′	° ′	° ′	° ′	° ′ ″	
46 31	46 47	46 57,4	46 49,4	46 46 12	Obſerved on ſhore.
46 35	46 49,6	46 57,8	46 43,2	45 45 24	Obſerved on board.

Lunar Obſervations at Falſe Bay.

1780.	Time per Clock N° 2.	Apparent Time.	Diſtances obſerved.	Zen. Diſt. of the ☀.	Zen. Diſt. of the ☽'s U.L.	Sextant uſed.	Error of Sextant.	Barom.	Therm.	Latitude in.	Longitude deduced.	Phenomena and Remarks.
	H. ′ ″	H. ′ ″	° ′ ″	° ′	° ′		′ ″		°	° ′ ″	° ′ ″	
♂ April 18.	9 1 41	7 15 51,6	59 13 10	48 48	68 34	R. 1	−1 30	30,10	72	34 11 5 S	18 4 39 E.	☽ à Regulus.
	9 7 58	7 22 7,7	59 48 5	48 27	67 18		−1 5	30,10	72		18 21 55	Do.
	9 18 34	7 32 43,6	59 52 5	47 56	65 11	D. 1	+0 45				18 17 24	Do.
	9 25 3	7 39 12,0	59 22 48	47 42	63 51		+0 45				18 17 0	Do.
				Z.D. ☉'s U.L.	Z.D. ☽'s U.L.							
☉—23.	22 33 57	20 23 7	115 14 40	69 35	49 56		−1 30	30,14	76		18 30 0	☽ à Sun.
	22 42 5	20 31 14	115 10 30	68 8	51 33		+0 35				18 55 0	Do.
☽—24.	22 17 29	20 3 59	103 59 3	72 45	35 46		−1 20	30,21	74½		18 42 1	Do.
	22 24 11	20 10 41	103 54 50	71 49	37 8		+0 45				18 48 30	Do.
	23 27 4	21 13 27	103 35 27	61 34	49 46		−1 10				18 44 0	Do.
	23 33 5	21 19 37	103 32 3	60 36	50 59		0 0				18 49 45	Do.
♂—25.	22 56 4	20 39 45½	92 37 27	67 13	33 39		−1 10	30,24	69		18 56 30	Do.
	23 2 47	20 46 25	92 33 55	66 6	35 6		+1 40				18 35 30	Do.
	23 11 2	20 54 39	92 30 40	64 47	36 43		+0 40				18 47 0	Do.
	23 16 8	20 59 44	92 30 19	63 59	37 46		−1 10				18 29 15	Do.
♃—27.	22 42 55	20 20 59½	70 38 11	70 43	19 7		−1 11	30,04	66		18 49 37	Do.
	22 50 47	20 28 51	70 34 10	69 15	20 0		+0 40				18 40 30	Do.

A mean of all the above reſults is 18° 37′ 19″ Eaſt for the longitude.

On the full and change days it was high water in Simon's Bay, at 2^h 55′ apparent time. The water roſe and fell 5 feet 5 inches at greateſt; and at neap tides it roſe 4 feet and one inch. The day and night tides were nearly the ſame when unaffected by winds. W. B.

Obſervations at the Cape of Good Hope continued.

Lunar Obſervations made at Falſe Bay by Captain King and Officers of the Diſcovery.

1780.	Apparent Time.	Diſtances obſerved.	Altitude of the ✳.	Zen. Diſt. of the ☽'s L. L.	Sextant uſed.	Error of Sextant.	Barom.	Therm.	Obſervers	Latitude in.	Longitude deduced.	Phenomena and Remarks.
	° ′ ″	° ′ ″	° ′	° ′		′ ″		°		° ′ ″	° ′ ″	
♄ April 22.	11 4 4	62 6 30	65 47	56 0	D.	—0 50	30,11	54	K	34 11 5	18 4 30	☽ à Spica Virginis.
	11 4 4	62 6 15	65 47	56 0	R. 1	—3 7			M		18 4 22	Do.
	11 11 0	62 8 40	65 49	54 47	R. 1	—3 7			K		18 35 0	Do.
	11 11 0	62 9 55	65 49	54 47	D.	—0 50			M		17 59 30	Do.
	11 21 41	62 14 5	65 39	52 39	R. 2	—0 30			K		18 17 45	Do.
	11 21 41	62 15 0	65 39	52 39	R. 3	+1 40			M		17 51 45	Do.
	11 28 9	62 16 50	65 15	51 24	R. 3	+1 40			K		18 44 0	Do.
	11 28 9	62 16 45	65 15	51 24	R. 2	—0 30			M		18 51 15	Do.
☉—23.	14 44 47	30 22 0	78 26	22 24	D.	—1 0	30,14	76	M		18 1 0	☽ à Antares.
	14 57 48	30 25 7	76 18	19 56	R. 1	—3 5			M		18 6 45	Do.
	15 9 26	30 28 27	74 14	17 43	R. 2	—1 15			M		18 23 30	Do.
	15 24 37	30 33 35	71 23	14 49	R. 3	+1 20			M		18 17 45	Do.
				Z.D. ☽'s U.L.								
	16 32 43	54 22 42	39 16	7 31	D.	—1 0			M		18 24 30	☽ à Fomalhault.
	16 50 31	54 17 45	42 51	8 57	R. 1	—3 7			M		18 33 15	Do.
	17 2 41	54 14 32	45 19	10 37	R. 2	—1 15			M		18 48 30	Do.
	17 15 4	54 9 22	47 53	12 40	R. 3	+1 20			M		18 6 30	Do.
			Z.D. ☉'s L.L.									
	20 43 30	115 7 0	66 40	53 54	D.	—1 0			M		19 18 30	☽ à Sun.
				Z.D. ☽'s L.L.								
☽—24.	15 26 57	42 57 17	70 11	24 23	D.	—1 5	30,21	74½	M		18 0 30	☽ à Antares.
	15 40 18	43 2 0	67 33	21 50	R. 1	—2 50			M		18 18 30	Do.
	15 53 47	43 6 20	64 50	19 13	R. 2	—0 45			M		17 48 0	Do.
	16 7 55	43 9 50	61 57	16 34	R. 3	+1 0			M		18 18 30	Do.
			Z.D. ☉'s U.L.	Z.D. ☽'s U.L.								
	21 23 1	103 31 47	60 13	51 53	D.	—1 5			M		19 23 45	☽ à Sun.
	21 45 18	103 22 20	57 6	54 16	R. 3	+1 0			M		18 50 15	Do.
			Alt. of the ✳	Z.D. ☽'s L.L.								
♂—25.	15 36 25	55 9 20	67 31	33 40	D.	—1 0	30,24	69	M		17 59 0	☽ à Antares.
	15 49 36	55 14 32	64 52	31 2	R. 1	—2 50			M		18 8 15	Do.
	16 18 26	55 19 25	58 59	25 24	R. 3	+1 45			M		18 8 45	Do.
			Z.D ☉'s LL.	Z.D. ☽'s U.L.								
	20 44 53	92 35 27	66 42	34 10	D.	—1 0			M		19 20 0	☽ à Sun.
	21 10 57	92 25 55	62 47	39 55	R. 3	+1 5			M		18 47 45	Do.
			Alt. of the ✳.	Z.D. ☽'s L.L.								
♃—27.	15 58 7	79 11 45	62 3	61 19	D.	—1 0	30,04	66	M		18 9 45	☽ à Antares.
	16 36 0	79 26 2	54 15	43 26	R. 2	—0 40			M		17 53 30	Do.
	16 58 44	79 34 2	49 33	39 14	R. 3	+1 30			M		17 58 0	Do.
			Z.D ☉'s L.L.	Z.D. ☽'s U.L.								
	21 1 2	70 25 52	64 47	24 27	D.	—1 0			M		18 53 15	☽ à Sun.
	21 8 6	70 24 55	63 41	25 36	R. 1	—2 50			M		19 23 15	Do.
	21 14 53	70 23 0	62 41	26 44	R. 2	—0 40			M		19 23 30	Do.
	21 24 17	70 19 22	61 19	28 18½	R. 3	—1 30			M		18 56 15	Do.
♀—28.	20 22 46	59 32 42	71 23	22 1	D.	—1 0			M		18 50 15	Do.
	20 32 54	59 29 22	69 41	22 8	D.	—1 0			G		18 28 45	Do.
	20 32 54	59 31 5	69 41	22 8	R. 1	—2 50			M		19 20 45	Do.
	20 43 41	59 28 17	67 40	22 33	R. 2	—0 40	29,90	71	M		19 25 0	Do.
	20 43 41	59 27 17	67 40	22 33	R. 3	+1 30			G		18 52 0	Do.
	20 52 2	59 24 42	66 27	23 1	R. 3	+1 30			M		18 38 30	Do.
	20 52 2	59 25 57	66 27	23 1	R. 2	—0 40			G		19 14 30	Do.
				Z.D. ☽'s L.L.								
♄—29.	21 50 59	47 57 37	58 16	29 24	D.	—1 0	30,66	69	M		18 52 45	Do.
	22 28 50	47 43 17	53 2	34 58	R. 6	+1 30			M		18 46 30	Do.

A mean of the above results is 18° 32′ 47″ E. for the longitude.

Obſervations at the Cape of Good Hope continued.

Meridian Zenith Diſtances obſerved by Captain King.

1780.	Zen. Diſt. obſerved.	Zenith Diſtance correct.	Declination.	Latitude.	N° of Obſervations.	Barom.	Therm.	Phenomena and Remarks.
	° ′ ″	° ′ ″	° ′ ″	° ′ ″				
☉ April 25.	46 41 50	46 59 49,9	12 48 24,7	34 11 25,2	1	30,27	69	Sun's U. L.
♂ —— 25.	47 53 15	47 39 13,1	13 27 33,9	34 11 39,2	1	30,22	72	Sun's L. L.
☿ —— 26.	48 11 40	47 57 41,1	13 46 48,8	34 10 53,3	1	30,25	73	Do.
☉ —— 30.	49 26 10	49 12 14,7	15 1 31,5	34 10 43,2	1	30,11	67	Do.
☽ May 1.	49 44 30	49 30 35,6	15 19 36,0	34 10 59,6	1	30,20	73	Do.
	47 11 30	47 13 31,4	13 2 5,8	34 11 25,6	3			Regulus.
	55 5 52	55 8 13,5	20 56 55,7	34 11 17,8	2			γ Leonis.
	26 26 45	26 28 13,4	7 42 55,1	34 11 8,5	3			α Hydræ.
	27 40 30	27 41 56,4	61 52 57,1	34 11 0,7	2			α } Crucis.
	21 40 20	21 41 52,6	55 52 54,5	34 11 1,9	2			γ } Crucis.
	24 16 15	24 17 40,6	58 29 12,8	34 11 32,2	2			β } Crucis.

Theſe Stars were obſerved between the 1ſt and 5th of May.
A mean of all the above reſults is =34° 11′ 17″ S. for the latitude.

Azimuths obſerved by Captain King.

1780.	Zen. Diſt. of the ☉'s L. L.	Azimuths of the ☉'s Center.	Maker of the Compaſſes.	Variation deduced.	Means.	Phenomena and Remarks.
	° ′ ″	° ′		° ′ ″	° ′	
♄ April 29.	65 5 40	N 70 30 E	Knight N°2.	22 4 0	21 23⅓ W	
	63 34 20	67 3⅓	D° reverſed.	20 42 40		
	61 16 50	65 4	Martin.	22 9 50	22 23¾	
	60 6 0	63 35	D° reverſed.	22 37 40		Mean variat. 22° 4′ 37″ W.
☉ —— 30.	69 5 30	N 30 34 W	Martin.	21 40 0	21 51⅓	
	70 28 15	31 43	D° reverſed.	22 42 40		
	71 43 30	32 37⅓	Knight N°2.	23 25 40	22 40 5	
	73 10 30	35 37½	D° reverſed.	21 54 30		

ASTRONOMICAL OBSERVATIONS

FOR DETERMINING

THE LATITUDE OF THE SHIP AND HER LONGITUDE,

BY A WATCH, N° 1.

Made by Mr. KENDALL on Mr. HARRISON's Principles,

Made on Board His MAJESTY'S SLOOP RESOLUTION,

IN HER LATE VOYAGE ON DISCOVERIES,

IN THE YEARS 1776, 77, 78, 79, 80.

BY CAPTAIN COOKE AND LIEUTENANT KING.

1776.	Time per Watch N° 1.	Apparent Time.	Altitudes of the ☉'s L. L.	Therm.	Latitude in.	Longitude by Watch N° 1.	N° of Observations.	Remarks.
	H. ′ ″	H. ′ ″	° ′		° ′	° ′ ″		
♄ June 18.	18 40 46½	18 46 30	25 7,7	61½	51 30½ N	0 44 30W	6	
♂ July 13.	5 23 24	5 4 5	25 10,7	61	50 0	4 32 45	6	
	18 38 15	18 18 33	19 7	65½	49 46	4 39 7	5	A little uncertain,
	20 43 21	20 23 26	39 8	65½	49 46	4 41 0	6	the air hazy.
☽ —— 15.	6 4 16	5 40 32	19 4,3	65½	49 45	5 36 17	6	
	21 10 34	20 45 50	42 13	65	50 0	5 51 0	6	
♂ —— 16.		Noon.		66	48 43½	Dip 4′.		
	19 0 18	18 36 26	21 25,7	64	48 57	5 36 30	4	Flying clouds.
☿ —— 17.		Noon.	62 15	65½	48 41½	Dip 4′.		
	6 37 38	6 15 5	13 7,1	64½	48 40	5 16 45	5	Fine weather.
	19 14 50	18 52 11	23 55,3	65	48 40	5 17 39	5	
♃ —— 18.		Noon.	62 8,1	65	48 36			
	20 26 0	19 56 24	34 22,3	64	48 30	7 1 15	3	
♀ —— 19.		Noon.	62 21,3	65	48 11			
	4 36 51	4 6 4	34 1,3	64½	47 46	7 22 0	3	Cloudy at times.
	19 39 42	19 5 45	25 46,2	64	46 30	8 6 0	2	
♄ —— 20.		Noon.	64 10	64¾	46 11	Dip 4⅓.		
☉ —— 21.		Noon.	64 50,5		45 49¾			
	21 17 13	21 24 17	43 41,3	59	44 18	8 19 30	6	
☽ —— 22.		Noon.	65 50,5	59½	44 5			
	5 48 9	5 12 43	21 59,6	63	43 54	8 26 45	6	Fine weather.
	19 24 49	18 50 2	22 23,6	60	43 46	8 32 30	3	
♂ —— 23.		Noon.	65 57	70¼	43 48			
	21 22 36	20 44 56	42 51,2	66	43 30	9 0 30	4	
☿ —— 24.		Noon.	66 8		43 23¾			
	4 56 50	4 17 16	31 54,1	69	43 12	9 29 0	6	
	21 4 6	20 19 52	38 35	68	41 33	10 39 0	3	
♃ —— 25.		Noon.	68 8	68¾	41 11½			
	5 56 12	5 16 27	21 36,8	66	40 43	11 2 30	6	
	20 8 43	19 20 5	27 12,2	65	39 20	11 45 15	4	
♀ —— 26.		Noon.	70 13	68¼	38 53			
	6 13 33	5 22 37	18 48,2	68½	38 22	12 19 50	6	
	20 30 35	19 35 39	30 1,2	69½	36 59	13 20 30	3	
♄ —— 27.		Noon.	72 17,5	71	36 34¾			
	19 53 40	18 56 23	21 50,8		35 10	13 56 30	6	Cloudy.
☉ —— 28.		Noon.	73 40,3	66½	34 57½			
	20 10 51	19 11 4	24 32,7	69	33 45	14 34 25	5	
☽ —— 29.		Noon.	74 55,9	70½	33 27¾			
♂ —— 30.		Noon.	76 32,7	73¼	31 37¼			
			Lunar Eclipse.					
	11 9 50	10 6 38	Beginning of the total darkness observed.					
	The end of total darkness and eclipse could not be observed for clouds. J. C.							
☿ —— 31.		Noon.	78 35,8	71	29 18¼			
	5 22 51	4 16 43	30 41,8	73	29 0	16 13 15	6	
	20 47 6	19 39 29	47 45	71	28 31	16 30 0	6	

1776.	Time per Watch N° 1.	Apparent Time.	Altitudes of the ☉'s ⌒ L. L.	Therm.	Latitude in.	Longitude by Watch N° 1.	N° of Observations.	Remarks.
	H. ′ ″	° ′ ″	° ′		° ′	° ′ ″		
♃ Aug. 1.		Noon.	79 9,2	75	28 30 N			
	20 19 33	19 12 9	23 29,5	71¼		16 30 29 W	6	These observations were made when at anchor in Santa Cruz Road, in the island of Teneriff.
	20 33 12	19 25 55	26 39,7	71¼		16 31 7	6	
	20 45 57	21 37 44	55 31,4	71½	28 31	16 32 22	6	
♀ —— 2.		Noon.	78 53,2	76	28 30			
☉ —— 4.		Noon.		78¾	28 30½			
	7 14 37	6 6 57	6 21,2	78	28 2	16 40 7	6	
	20 22 7	19 12 8	23 5,7	77	26 50	17 16 37	5	
☽ —— 5.		Noon.	80 7,8	74	26 27¼			
	6 42 35	5 31 41	13 19,6	73½	26 9	17 31 15	6	
	20 46 57	19 30 29	26 50,7	73	24 46	18 10 50	4	
♂ —— 6.		Noon.	81 54	75	24 24½			
	6 52 11	5 37 4	11 32,2	74	23 46	18 36 30	6	Cloudy.
	20 23 43	19 6 24	21 1,5	72	22 43	19 10 30	4	
☿ —— 7.		Noon.	83 36,5	74½	22 25¼			
	21 37 9	20 16 50	36 55,9	73½	20 59	19 51 45	5	
♃ —— 8.		Noon.	84 57,3	74⅓	20 47			
	6 15 49	4 55 12	20 10,7	75	20 30	20 3 7	6	
♀ —— 9.		Noon.	86 9,7	76	19 17¼			
	20 44 51	19 15 39	22 1,9	74½	17 26	22 16 0	4	
♄ —— 10.		Noon.	88 6,3	76	17 2½			Fine weather.
	5 34 2	4 2 40	31 42,8	75	16 42	22 46 5	4	
	23 33 39	22 0 37	61 4,2	78	15 54	23 16 0	5	
☉ —— 11.		Noon.	88 57,5	81	15 54			
	21 14 12	19 44 33	27 20,0	77	15 25	23 36 0	4	
☽ —— 12.	22 28 3	20 53 17	44 45,0	79	14 52	23 45 47	4	
♂ —— 13.		Noon.	89 38,7	82	14 36			
	20 23 12	18 48 58	14 48,0	77	13 28	23 42 45	4	The weather very fine.
☿ —— 14.	5 43 29	4 10 15	29 20,0	81	12 54	23 38 20	4	
♃ —— 15.		Noon.	38 1,0	80	12 1¾			
	6 42 58	5 7 32	15 12,5	80½	11 54	24 5 15	4	
	22 14 41	20 42 41	40 41,1	79	11 49	24 22 10	5	
♀ —— 16.		Noon.	38 1,8	81	11 43⅓			
	6 6 17	4 34 26	23 56,4	80½	11 30	24 10 45	5	Some showers of rain.
	21 30 16	19 57 8	30 29,8	78½	10 36	23 36 0	5	
♄ —— 17.	6 52 8	5 20 31	11 43,7	79	10 27	23 14 45	5	
	22 52 52	21 22 12	51 5,0	77	10 2	23 3 0	4	Do.
☉ —— 18.		Noon.	86 57,7	80	10 0½			
	6 52 22	5 21 48	11 10,7	78	9 47	23 2 30	4	
	22 7 36	20 37 53	40 6,7	78½	8 55	22 52 15	4	
☽ —— 19.		Noon.	86 8,0	79½	8 50¾			
	4 40 41	3 11 11	42 45,7	79¾	8 44	22 49 45	4	
♂ —— 20.	20 47 7	19 27 33	22 39,8	76¾	7 5	20 27 40	4	A hazy, bad horizon.
☿ —— 21.	21 35 9	20 8 20	32 29,6	78	6 33	21 5 15	4	
♃ —— 22.		Noon.	84 48,5	79½	6 31⅓			
	6 0 47	4 38 19	21 4,5	79	6 29	21 16 30	4	

1776.	Time per Watch N° 1.	Apparent Time.	Altitude of the ☉'s L. L.	Therm.	Latitude in.	Longitude by Watch N° 1.	N° of Observations.	Remarks.
	H. ′ ″	H. ′ ″	° ′		° ′	° ′ ″		
♃ Aug. 22.	21 34 34	20 13 4	33 36,0	78	6 8	21 4 30 W	3	
♀ —— 23.		Noon.	84 40,2	80	6 2			
♄ —— 24.	21 54 18	20 39 33	39 57,7	76½	5 0	20 13 15	3	Fine weather.
☉ —— 25.	20 55 16	19 33 4	23 29,4	76½	4 23	21 28 20	4	
☽ —— 26.		Noon.	83 51,4	79	4 11½			
	5 17 38	3 53 56	31 32,4	78	4 2	21 57 30	4	
	21 28 52	20 2 39	30 39,8	79	3 44	22 31 0	4	
♂ —— 27.		Noon.	83 41,2	79½	3 39¾			
☿ —— 28.	21 52 54	20 22 59	35 47,2	78	2 46	23 23 0	4	
♃ —— 29.		Noon.	83 28,8	80	2 43¾			Hazy.
	5 47 42	4 16 47	25 44,5	79	2 40	23 55 0	4	
	21 4 37	19 29 20	22 15,0	77½	2 14	25 3 15	6	
♀ —— 30.		Noon.	83 15,7	80	2 9¾			
	6 47 30	5 9 54	12 33,7	78	2 3	25 40 15	6	
	21 11 46	19 30 24	22 27,7	76	1 12	26 39 30	4	Fine weather.
♄ —— 31.		Noon.	82 33,3	79¼	1 4½			
	5 38 23	3 55 35	30 57,5	77½	0 54½	27 33 0	5	
	21 49 56	20 4 5	30 31,7	77½	0 7 N	25 52 0	4	
☉ Sept. 1.		Noon.	81 46,8	78	0 3 S			
	21 56 22	20 6 21	30 53,5	79	1 17	28 59 30	4	
☽ —— 2.		Noon.	80 40,2	79½	1 32			
	6 57 21	5 6 10	12 57,3	78	1 49	29 18 37	5	
	21 38 52	19 46 6	25 41,1	78	2 53	29 46 0	4	
♂ —— 3.		Noon.	79 20	79¾	3 14¼			
	5 58 29	4 4 59	27 46,5	78	3 32	29 53 0	5	
	21 47 39	19 51 7	26 39,8	78½	4 26	30 47 30	4	
☿ —— 4.		Noon.	78 16,0	78	4 40⅓			
	5 57 17	3 58 46	29 4,5	78	4 55	31 19 15	4	Do.
	22 22 26	20 20 8	33 36,7	77½	5 35	32 19 15	4	
♃ —— 5.		Noon.	78 16,0	78	5 47½			
	7 3 54	4 59 14	14 11,0	78	6 0	32 57 0	4	
	22 55 32	20 48 8	40 13,5	79	6 51	33 41 15	4	
♀ —— 6.		Noon.	76 39,0	78½	7 3			
	6 9 35	4 1 28	28 8,6	77½	7 15½	33 53 0	4	
	21 57 54	19 48 9	25 33,4	77	7 54	34 21 45	4	
♄ —— 7.		Noon.	75 53,0	77½	8 10			
	22 49 21	20 38 8	37 33,6	78	8 50	34 49 15	4	
☉ —— 8.		Noon.	75 30,3	77	8 57			
	6 41 18	4 30 45	20 52,4	78	9 3	34 44 45	4	Do.
	22 43 38	20 32 8	36 0,0	78	9 39	34 58 45	4	
☽ —— 9.		Noon.	74 57,0	79	9 51¾			
	5 44 41	3 33 57	34 29,6	77¾	10 0	34 49 12	5	Do.
	22 15 48	20 5 17	29 21,0	77½	11 8	34 49 15	4	
♂ —— 10.		Noon.	73 45,1	78	11 25¼			
☿ —— 11.		Noon.	72 31,4	77½	13 3			

1776.	Time per Watch. N° 1.	Apparent Time.	Altitudes of the ☉'s L. L.	Therm.	Latitude in.	Longitude by Watch N° 1.	N° of Observations.	Remarks.
	H. ′ ″	H. ′ ″	° ′		° ′	° ′ ″		
☿ Sept. 11.	6 47 21	4 36 0	18 50,8	78	13 19 S	34 48 20W	5	A little hazy.
	22 26 31	20 17 57	31 53,9	77	14 13	34 31 15	4	
♃ —— 12.		Noon.	71 53,0	78	14 25			
	6 15 47	4 7 5	24 55,7	77	14 40	34 35 7	5	
	22 0 0	19 50 52	25 21,1	76½	15 33	34 45 0	4	
♀ —— 13.		Noon.	70 28,3	77	15 53			
	21 59 5	19 47 36	24 25,1	78¼	17 0	35 26 0	4	
♄ —— 14.	3 58 13	6 10 23	27 38,0	75½	17 37	35 38 0	5	Flying clouds.
☉ —— 16.	22 29 23	20 15 45	30 14,6	77	21 41	36 12 15	5	
☽ —— 17.	6 33 11	4 19 55	27 7,7	74½	22 11	36 11 0	5	
	23 1 37	20 49 35	37 13,3	74	23 27	35 56 37	5	
♂ —— 18.		Noon.	64 34,5	73½	23 42¾			
	22 24 57	20 15 31	29 28,9	71½	25 22	35 23 0	5	Do.
☿ —— 19.		Noon.	63 4,0	72	25 36⅓			
	22 11 24	20 6 9	27 12,6	70½	26 48	34 25 30	4	
♃ —— 20.		Noon.	62 2,5	71	27 1½			
	6 16 1	4 12 52	23 7,6	70	27 11	33 55 45	6	Fair weather.
	22 10 44	20 11 9	28 14,7	69	27 44	33 5 30	4	A great sea, which caused a bad horizon.
♀ —— 21.		Noon.	61 35,7	70½	27 51¾			
	6 28 51	4 31 36	19 6,5	70½	27 58	32 32 30	6	
	22 55 53	21 0 56	38 28,0	69	28 23	32 2 15	4	
♄ —— 22.		Noon.	61 22,0	70	28 28½			
	6 17 34	4 24 35	20 42,2	69	28 34	31 34 15	5	
	22 5 25	20 17 8	29 27,7	68	29 15	30 27 40	5	
☉ —— 23.		Noon.	60 51,5	68	29 22			
	6 43 2	4 57 21	13 41,8	70	29 23	29 50 30	5	Fine weather.
☽ —— 24.		Noon.	60 21,0	71½	30 16⅓			
	22 14 42	20 41 23	34 13,4	70	31 1	26 53 45	5	
♂ —— 25.		Noon.	59 52,0	69	31 8⅔			
☿ —— 26.	5 51 20	4 29 47	19 39,4	65	32 26	24 3 0	2	
	23 29 0	22 15 21	50 15,7	66	32 57	22 9 30	3	
♃ —— 27.		Noon.	58 46,0	67	33 1 3/10			Strong gales,
♀ —— 28.	20 22 31	19 29 0	19 44,2	59	33 45	17 17 30	4	and a tumbling sea;
♄ —— 29.		Noon.	58 47	56½	33 47			the horizon bad.
	5 33 49	4 43 19	17 18,5	60	33 47	16 34 15	5	
	21 12 17	20 24 35	31 5,4	60	33 53	15 55 30	5	
☉ —— 30.	21 47 45	21 10 30	39 58,0	59	34 8	13 24 0	3	
☽ Oct. 1.	19 31 2	19 5 45	15 34,4	57	34 13	10 23 0	4	
♂ —— 2.		Noon.	59 21,5	59	34 9			
	21 26 40	21 5 11	39 21,9	58	34 22	9 22 7	5	Fine clear weather.
☿ —— 3.		Noon.	59 34,4	57½	34 32			
	3 56 49	3 36 20	31 23,3	59	34 43	9 23 45	5	
♃ —— 4.		Noon.	58 41,5	61	35 48¾			
	19 37 8	19 6 8	18 31,8	59	35 45	9 13 0	4	
♀ —— 5.		Noon.	59 8,8	60	35 43⅔			
	4 36 23	4 10 29	23 10,5	60	35 42	8 29 30	3	

1776.	Time per Watch N° 1.	Apparent Time.	Altitude of the ☉'s L. L.	Therm.	Latitude in.	Longitude by Watch N° 1.	N° of Observations.	Remarks.
	H. ′ ″	H. ′ ″	° ′		° ′	° ′ ″		
♄ Oct. 5.	21 44 57	21 30 55	44 12,7	56½	35 21	8 7 15	4	
☉ —— 6.	20 15 3	20 0 53	27 39,1	56	35 18	8 5 45	5	
☽ —— 7.		Noon.	60 22,0	58	35 17½			
	4 4 43	3 50 37	29 24,7	65	35 19	8 6 15	5	Hazy weather.
	19 48 20	19 35 11	22 43,5	57¾	35 31	7 55 0	4	Small rain at times.
♂ —— 8.		Noon.	60 30,5	60	35 31			
	5 6 8	4 55 3	16 41,5	64	35 32⅓	7 25 30	3	
☿ —— 9.	19 32 55	19 39 43	24 18,0	59	35 39	3 4 15	4	Hazy cloudy weath.
♄ —— 12.	19 29 2	20 3 3	29 20	56	35 43 S	3 32 30 E	4	
☉ —— 13.		Noon.	62 13	57	35 40			
	18 9 34	18 58 48	16 39,5	56	35 13	7 17 15	4	
☽ —— 14.	3 7 38	4 1 53	28 47,6	57	34 59	8 31 30	4	
	18 26 51	19 29 16	23 8,7	55½	34 23	10 31 45	6	
♂ —— 15.	2 16 11	3 23 51	36 47,3	56	34 13	11 49 15	6	The ship great motion
	18 46 20	20 3 13	30 16,1	56	34 11	14 5 7	4	
♀ —— 16.	3 40 34	5 2 56	16 48,8	57	34 12	15 26 15	5	
	19 30 55	21 0 8	41 54,0	58½	34 5	17 7 0	5	
♃ —— 17.		Noon.	65 13,0	61	34 8¾			
	0 46 9	2 20 56	49 38,7	61	33 54	18 26 30	6	At anchor in Table Bay at the Cape of Good Hope.

From whence the Watch N° 1. was 3′¼ miles of longitude E. of the truth.
Note, 2″,02 losing, the rate the Watch kept at the Cape, is used in the following observations.

☉ Dec. 1.	18 12 24	19 42 21	32 37,7	64	33 54	18 1 48	4	
☽ —— 2.	3 19 34	4 49 53	26 3,3	64½	33 58	18 9 15	4	
♂ —— 3.		Noon.	78 17,7	65	33 58			
☿ —— 4.	18 12 33	19 52 48	25 15,3	62	38 29	20 53 46	6	
♃ —— 5.		Noon.	73 34,0	62	38 44¼			
	2 36 18	4 20 47	32 39,7	61½	39 4	21 58 40	4	Hazy weather.
	18 19 41	20 9 19	38 31,2	62	38 52	23 18 30	4	
♀ —— 6.		Noon.	73 24,7	60½	39 8			
♄ —— 7.		Noon.	72 37,5	58½	39 53½			
	3 18 52	5 19 38	21 53,5	59	40 9	26 1 45	4	
	18 6 39	20 12 33	39 13,3	53¼	40 53	27 36 15	4	
☉ —— 8.		Noon.	71 33,5	53½	41 3			
	3 0 46	5 10 47	23 40,0	54	41 23	28 40 0	4	Ditto.
	16 30 11	18 43 43	22 52,7	52½	42 23	29 36 22	4	
♂ —— 10.		Noon.	68 51,9	45	43 56½			
	1 40 34	4 5 40	35 51,0	56	44 18	32 40 45	4	
	19 46 38	22 17 49	59 12,6	53	45 37	34 14 52	6	
	2 10 41	4 45 27	28 55,0	53	45 45	35 10 15	4	A very rough sea.
☿ —— 11.	15 40 38	18 19 43	19 34,2	41	46 5	36 18 30	5	
		Noon.	66 38,0	41½	46 20			
♃ —— 12.	2 19 44	5 4 5	25 50,9	48½	46 40	37 40 30	5	
♀ —— 13.		Noon.	65 45,0	49	47 17			
	1 0 44	3 59 29	36 52,7	56	47 24	41 23 6	6	

1776.	Time per Watch N° 1.	Apparent Time.	Altitude of the ☉'s L. L.	Therm.	Latitude in.	Longitude by Watch N° 1.	N° of Observations.	Remarks.
	H. ′ ″	H. ′ ″	° ′		° ′	° ′ ″		
♀ Dec. 13.	17 38 33	20 46 33	44 26,9	54	47 42 S	43 46 20 E	6	Hazy.
♄ —— 14.		Noon.	65 19,0	50	47 46			
	16 16 52	19 39 29	33 21,5	48½	48 16	47 31 45	6	
☉ —— 15.		Noon.	64 42,0	48	48 26			
☽ —— 16.	16 0 54	19 51 13	35 21,3	47½	48 27	54 40 45	4	
♂ —— 17.		Noon.	64 44,0	39½	48 29			
	14 57 25	18 54 13	25 58,1	49	48 34	56 21 30	5	Ditto.
♀ —— 18.		Noon.	64 37,7	42	48 36⅔			
♃ —— 19.		Noon.	64 48,5	40	48 26			
	17 43 32	22 2 45	55 48,1	49½	48 22	62 23 15	6	
♀ —— 20.		Noon.	65 54,0	50¼	48 26⅔			
☽ —— 23.	16 6 1	20 49 31	44 53,0	49½	48 25	68 47 0	4	
♂ —— 24.		Noon.	64 50,0	50	48 24			
	23 38 40	4 23 25	32 56,3	51	48 38	69 8 15	4	Cloudy weather
♀ —— 27.	14 2 41	18 45 59	24 31,7	48	48 41	69 10 55	6	at the Islands of
♄ —— 28.	15 0 41	19 44 13	34 2,9	45	48 44	69 21 30	5	Desolation.
☉ —— 29.		Noon.	64 10,5	47	48 50¼			
	14 10 13	18 55 20	25 59,6	48	48 58	69 51 45	5	
☽ —— 30.	14 59 9	19 54 55	35 41,4	47½	48 56	72 38 15	6	A very rough sea,
♂ —— 31.	14 23 2	19 36 27	32 37,9	45	48 40	76 57 41	4	and bad horizon.
1777. ♃ Jan. 1.		Noon.	64 16	39½	48 36⅔			
	1 29 11	6 50 10	9 5,0	39	48 30	79 9 20	6	Hazy weather.
	13 54 29	19 20 29	29 55,4	46	48 22	80 24 28	6	
♃ —— 2.		Noon.	64 21,7	46	48 20			
	13 54 20	19 32 9	31 48,0	49¼	48 18	83 28 0	6	Ditto.
♀ —— 3.		Noon.	64 19,7	46¾	48 16¾			
	22 33 45	4 18 13	33 20,4	50	48 18	85 10 10	5	
☿ —— 8.	0 4 1	6 39 5	10 5,1	46	48 18	100 16 25	5	
	14 4 20	20 47 16	43 35,0	55	48 18	102 16 15	6	
♃ —— 9.		Noon.	64 29,5	48	48 23			Cloudy at times.
	21 20 26	4 24 44	33 25,0	50	48 24	103 13 15	5	
♀ —— 10.		Noon.	63 21,5	55	48 20½			
♂ —— 14.		Noon.	63 44,2	55	47 19			
☿ —— 15.	11 21 44	19 36 16	31 14,0	55½	45 16	123 50 30	3	
♃ —— 16.		Noon.	65 29,5	56	45 12			
	20 39 38	5 1 45	24 29,0	59	45 0	125 46 0	5	Blowing weather.
	10 46 53	19 16 29	27 28,0	59½	44 32	127 48 30	3	
♀ —— 17.		Noon.	66 12,0	59	44 17¾			
	20 26 59	5 2 7	24 16,5	58½	44 18	129 4 55	6	
♄ —— 18.		Noon.	65 54,5	56	44 22¾			
	19 55 39	4 43 30	27 27,1	54	44 18	132 20 10	6	
	12 10 10	21 6 7	46 46,7	54	43 55	134 24 15	4	
☉ —— 19.		Noon.	66 14,5	55	43 51			
	20 12 6	5 13 6	21 57,7	53½	43 44	135 41 20	4	
☽ —— 20.		Noon.	66 19,0	55¼	43 33⅓			

1777.	Time per Watch N° 1.	Apparent Time.	Altitudes of the ☉'s L. L.	Therm.	Latitude in.	Longitude by Watch N° 1.	N° of Observations.	Remarks.
	H. ′ ″	H. ′ ″	° ′		° ′	° ′ ″		
☽ Jan. 12.	19 48 57	5 5 3	23 15,4	54	43 33 S	139 31 37 E	5	Strong gales and a great sea.
♂ —— 21.	10 17 27	19 39 33	31 14,5	54	43 24	141 3 45		
		Noon.	66 15,2	53½	43 23¾			
☿ —— 22.	19 44 34	5 11 1	22 1,0	55	43 27	142 10 52	6	
		Noon.	65 53,5	57½	43 32			
♃ —— 23.	19 54 15	5 26 32	19 7,7	56	43 32	143 41 0	3	Hazy, with small rain at times.
		Noon.	65 28,0	58	43 43			
	18 45 28	4 24 36	30 9,5	56½	43 51	145 27 30	6	

Mr. King's Remarks.

As he was observing the distance of Regulus from the Moon, both her limbs being bright and free from clouds, he perceived the limb a little darkened, and supposed it to be the beginning of an eclipse, and, on looking into the Ephemeris, found it to be so: it being too late to get a night telescope, and having the greater magnifying power of the Sextant telescope in use, continued to observe, keeping his eye on the part, and found that only the penumbra had entered: he observed the beginning at $2^h\ 48'\ 34''$ per Watch, or $= 12^h\ 34'\ 03''$ apparent time, from whence he has deducted the longitude $= 146°\ 40\frac{1}{4}'$ East. The end could not be observed for clouds. He thinks he could not be mistaken more than a minute.

	8 10 4	17 55 4	12 10,1	56	43 48	146 56 30	4	
♀ —— 24.		Noon.	65 0,0	56½	43 42½			
	19 53 1	5 40 48	16 18,8	56	43 48	147 38 37	6	
	8 18 42	18 6 51	14 2,4	64¾	43 43	147 46 30	3	
♄ —— 25.		Noon.	64 59,0	59	43 43			
	8 46 35	18 35 45	18 58,3	57	43 36	148 4 45	6	
☽ —— 27.	10 50 54	20 39 32	40 53,1		43 21⅓	148 1 22	6	In at Adventure Bay, Van Dieman's Land.
♂ —— 28.		Noon.	64 32,9	66	43 21⅓			
		Noon.	64 31,2		43 22⅔			
☿ —— 29.	11 29 8	21 17 5	46 58,3	67	43 24	147 55 22	6	
♃ —— 30.	18 18 22	4 9 22	31 43,8	61	43 21	148 41 40	6	
♀ —— 31.		Noon.	64 0,2	66	43 23½			
	20 9 14	5 59 26	11 51,4	65	44 1	150 35 0	6	Fine weather.
♄ Feb. 1.		Noon.	62 34,0	66	44 16½			
☉ —— 2.		Noon.	61 50,5	67½	44 42½			
	17 42 50	4 1 39	32 21,8	64	44 50	155 43 30	6	Hazy weather.
☽ —— 3.		Noon.	61 33,0	59	44 42¾			
♂ —— 4.	9 46 3	20 31 33	37 53,0	58	43 34	162 25 20	6	
☿ —— 5.		Noon.	62 7,7	62	43 31¾			
	17 49 51	4 36 5	25 45,4	66½	43 30	162 36 50	5	
	7 40 56	18 31 23	16 5,9	65	43 5	163 40 15	4	Moderate, with small rain at times.
♃ —— 6.		Noon.	62 24,7	65	42 56½			
	18 32 42	5 26 56	16 18,3	68	42 50	164 34 15	3	
	8 14 26	19 12 36	23 24,0	67½	42 32	165 36 20	3	
♀ —— 7.		Noon.	62 35,8	67	42 26¾			

1777.	Time per Watch N° 1.	Apparent Time.	Altitudes of the ☉'s L. L.	Therm.	Latitude in.	Longitude by Watch N° 1.	N° of Observations	Remarks.
	H. ′ ″	H. ′ ″	° ′		° ′	° ′ ″		
♀ Feb. 7.	17 59 12	4 59 39	21 3,7	67	42 24	166 10 40 E	4	Fair weather.
	7 16 29	18 22 23	13 56,4	66	42 4	167 32 30	4	
♄ —— 8.		Noon.	62 49,7	70	41 54½			
	16 52 5	4 0 53	31 45,9	70	41 44	168 16 0	6	
	9 32 8	20 47 24	40 34,6	66	41 3	169 52 0	6	
☉ —— 9.		Noon.	63 25,3	65	40 59½			
	16 45 33	4 3 3	31 16,9	67	40 54	170 26 30	4	
☽ —— 10.		Noon.	63 30,0	67	40 35½			
	17 24 16	4 49 58	22 14,7	66	40 36	172 28 50	6	Ditto.
	9 40 40	21 11 0	66 32,0	67	40 24	173 38 0	4	
♂ —— 11.		Noon.	63 18,0	66	40 28⅓			
	17 2 29	4 25 9	24 51,5	70	40 31	174 12 45	5	
	6 46 50	18 22 21	12 58,7	66	41 2	174 55 0	6	
	6 50 9	18 25 37	13 35,0	66	41 2	174 54 20	6	Fresh gales and fair.
	7 3 47	18 39 12	16 7,5	66	41 2	174 53 40	12	
	7 11 1	19 1 9	17 29,4	66	41 3	174 54 25	12	

By comparing the above longitude by the Watch N° 1. with a mean of the results of 122 sets of Lunar observations taken in Queen Charlotte's Sound, the Watch gave 35¾ miles too much, or East of the Lunar observations.

Mr. King computes the daily rate of the Time-keeper or Watch N° 1. while at Queen Charlotte's Sound, to be 2″,913 losing on mean time, and that it was slow for mean time 11h 50′ 37″,4 the 22d at noon; which numbers are used in determining the longitude by N° 1. as follow.

☿ —— 26.		Noon.	56 49,5	68	41 38⅓			
	17 33 12	5 14 33	14 0,9	68	41 45	175 20 30	6	
♀ —— 28.		Noon.	56 25,0	65	41 17½			Fair weather.
	17 4 25	4 54 37	9 34,9	69	41 25	177 26 15	4	
♄ March 1.	7 40 12	19 39 29	22 56,3	64	42 33	179 37 7	4	
☉ —— 2.		Noon.	54 22,0	62	42 35½			
	16 38 2	4 42 12	18 57,0	63	42 33	180 48 15	6	
☽ —— 3.	16 34 2	4 48 1	17 40,6	66	41 59	183 12 30	6	
	7 47 58	20 8 3	27 49,1	63	41 30	184 41 30	4	Strong gales and a very rough sea.
☿ —— 5.		Noon.	55 53,5	62	39 50¾			
	6 33 23	19 11 15	17 12,3	63	39 13	188 59 45	4	
♃ —— 6.		Noon.	56 15,0	65	39 10			
	7 3 48	19 49 56	24 18,1	64	39 16	190 59 0	5	
♀ —— 7.		Noon.	55 42,5	66	39 19¾			
	15 25 4	4 14 8	23 26,6	73	39 17	191 41 22	4	
	7 54 11	20 46 49	34 49,9	70	39 22	192 32 0	4	
♄ —— 8.		Noon.	55 14,3	69¼	39 24			
	15 52 9	4 47 32	16 50,1	67	39 24	193 11 37	4	Fair weather.
☉ —— 9.	7 0 30	20 4 57	26 15,7	69	39 26	195 20 7	4	
☽ —— 10.		Noon.	54 26,1	71	39 26			
	15 6 47	4 7 32	23 52,4	74	39 24	195 43 30	4	

1777.	Time per Watch N° 1.	Apparent Time.	Altitudes of the ☉'s L. L.	Therm.	Latitude in.	Longitude by Watch N° 1.	N° of Observations.	Remarks.
	H. ′ ″	H. ′ ″	° ′		° ′	° ′ ″		
♄ March 10.	6 34 36	19 42 9	21 46,2	71	39 29 S	196 2 17 E	4	
♂ —— 11.		Noon.	53 59,7	68	39 28¾			
	15 7 53	4 17 11	21 48,5	68½	39 28	196 26 35	4	
	8 14 25	21 22 57	39 17,1	67	39 12	196 11 45	4	Cloudy at times.
☿ —— 12.		Noon.	53 57,5	67½	38 41¾			
♀ —— 13.		Noon.	55 15,0	67	36 59½			
♄ —— 15.		Noon.	57 46,0	67	34 6½			
	15 7 53	4 29 13	19 42,4	73	33 54	199 7 20	4	
☉ —— 16.		Noon.	57 49,5	73	33 41			
	14 55 10	4 17 29	21 54,3	72	33 39	199 17 0	6	Fine weather.
	7 17 52	20 40 45	33 14,6	72½	33 33	199 22 8	4	
☽ —— 17.		Noon.	57 43,5	73	33 21½			
	6 29 20	19 54 57	24 22,4	71	32 21	199 58 0	4	
♂ —— 18.		Noon.	58 38,9	70¾	32 4¼			
	15 8 45	4 36 33	17 55,4	72	31 49	200 28 45	4	Flying clouds.
☿ —— 19.		Noon.	59 50,0	72½	30 29¾			
	6 39 48	20 10 47	28 2,8	73	29 16	201 8 0	5	
♃ —— 20.		Noon.	60 53,7	73	29 4			
	14 32 38	4 4 19	24 55,5	73	28 51	201 18 7	4	
	6 48 53	20 21 20	30 26,0	73	27 57	201 24 30	4	
♀ —— 21.		Noon.	61 46,3	72½	27 46¼			
	14 34 21	4 7 21	24 23,7	75	27 33	201 31 0	4	
	5 45 47	19 19 4	17 6,5	74	26 59	201 31 45	4	
♄ —— 22.		Noon.	67 16,7	75	26 51¾			
	5 59 1	19 32 38	20 3,5	75½	26 6	201 31 45	4	Ditto.
☉ —— 23.		Noon.	62 45,5	75	25 59			
	15 9 56	4 43 57	16 22,9	78	25 51	201 35 22	4	
	6 22 52	19 56 37	25 15,0	77	25 30	201 27 52	4	
☽ —— 24.		Noon.	62 59,0	77	25 22½			
	15 4 23	4 37 55	17 38,9	77	25 14	201 22 45	4	
	6 28 55	20 2 12	26 30,9	79½	24 34	201 15 45	4	Hazy weather.
♂ —— 25.		Noon.	63 29,5	79½	24 26⅙			
	14 55 30	4 28 47	19 40,3	78	24 20	201 13 45	4	
	6 3 1	19 36 31	20 51,9	79	23 44	201 13 30	4	
☿ —— 26.		Noon.	63 55,0	80½	23 40			
	14 35 48	4 9 56	23 49,9	80½	23 39	201 31 0	4	
♃ —— 27.		Noon.	63 53,7	80	23 16⅓			
	14 35 23	4 9 24	23 53,4	81	23 12	201 13 45	4	
	6 3 28	19 37 5	20 51,8	81	22 45	201 2 0	4	
♀ —— 28.		Noon.	64 14,0	81½	22 44½			
	14 19 48	3 53 56	27 15,3	82¾	22 45	201 10 15	4	
	5 55 20	19 30 39	19 19,9	81	22 21	201 24 45	4	Fair weather.
♄ —— 29.		Noon.	64 5,7	81	22 18⅕			
	14 22 26½	4 23 16	20 41,4	81	22 8	201 45 52	6	
	8 18 23	21 56 9	50 4,8	80½	21 57	201 55 30	6	
☉ —— 30.		Noon.	64 5,2	81	21 54½			

1777.	Time per Watch N° 1.	Apparent Time.	Altitudes of the ☉'s L. L.	Therm.	Latitude in.	Longitude by Watch N° 1.	N° of Observations.	Remarks.
	H. ′ ″	H. ′ ″	° ′		° ′	° ′ ″		
☉ March 30.	14 42 1	4 19 28	21 28,5	81	21 44 S	201 49 7 E	4	Fair weather.
	6 12 42	19 50 0	23 45,5	80	20 41	201 43 30	4	
☽ —— 31.		Noon.	65 11,2	82	20 26⅓			
	14 45 54	4 22 31	20 58,3	82½	20 14	201 31 0	4	
	6 2 56	19 39 49	21 26,6	81	20 4	201 31 52	4	
♂ April 1.		Noon.	65 24,1	83½	19 51⅓			
	14 43 21	4 20 24	21 21,5	83½	19 58	201 32 22	4	
	6 0 23	19 37 45	20 50,9	82	19 56	201 33 45	4	
☿ —— 2.		Noon.	64 50,9	82	20 0½			
	6 11 8	19 48 44	23 10,2	82½	20 0½	201 32 0	4	
♃ —— 3.		Noon.	64 28,0	82	20 0⅔			Cloudy at times.
	15 28 24	5 6 33	10 29,0	82	20 0	201 38 30	6	
	6 6 53	19 44 55	22 10,1	82½	19 56	201 33 15	4	
♀ —— 4.		Noon.	64 14,6	82	19 51			
	14 46 29	4 24 32	19 59,5	83½	19 49	201 31 30	6	
♄ —— 5.		Noon.	64 26,5	83	19 16½			
	5 52 5	19 28 37	18 20,4	83	19 13	201 0 30	4	
☉ —— 6.		Noon.	64 5,2	83	19 14			
	14 42 48	4 18 44	21 18,8	81½	19 17	200 49 30	6	Fair weather.
	6 16 0	19 49 9	22 42,7	82	19 24	200 4 37	4	
☽ —— 7.		Noon.	63 27,0	83	19 27½			
	14 25 37	3 57 21	25 46,4	82½	19 24	199 41 30	4	
	6 5 47	19 36 33	19 51,4	84	19 12	199 23 45	4	
♂ —— 8.		Noon.	63 16,0	84	19 7⅙			
	15 0 45	4 31 23	18 2,5	82½	19 2	199 20 0	4	
	6 19 35	19 49 15	22 38,5	82½	18 58	199 2 22	4	A little hazy.
☿ —— 9.		Noon.	63 11,7	82	18 58¼			
	14 38 [illegible]	4 7 47	23 15,8	82	18 57	199 1 15	4	
♃ —— 10.		Noon.	63 11,7	83	18 38¼			
	14 35 18	4 1 51	24 33,4	80	18 34	198 8 45	4	
♀ —— 11.		Noon.	63 9,0	81	18 20			
	14 31 10	3 53 35	26 20,2	82	18 22	196 53 45	4	
	5 54 6	19 17 12	15 8,4	81	18 14	197 9 22	6	Cloudy at times.
♄ —— 12.		Noon.	62 56,0	81	18 10			
	14 23 52	3 46 56	27 43,2	81	18 8	197 7 7	6	
☉ —— 13.		Noon.	62 36,5	82	18 7			
	9 5 42	22 27 20	54 1,5	80¼	18 7	196 37 30	3	
☽ —— 14.		Noon.	62 14,0	80½	18 8¾			
	7 31 0	20 52 30	35 48,6	82	18 8	196 31 7	4	
♂ —— 15.		Noon.	62 52,5	82	18 8			
	14 17 34	3 39 1	28 58,8	83	18 8	196 28 45	4	Hazy.
	8 19 37	21 41 12	45 27,1	83½	18 5	196 28 0	4	
☿ —— 16.		Noon.	61 33,0	83	18 6¾			
	6 13 50	19 35 44	18 42,0	82	18 4	196 28 37	6	
♃ —— 17.		Noon.	61 15,5	83	18 3½			
	15 29 35	4 51 41	12 25,7	85	18 6	196 29 30	4	

1777.	Time per Watch N° 1.	Apparent Time.	Altitudes of the ☉'s L. L.	Therm.	Latitude in.	Longitude by Watch N° 1.	N° of Observations.	Remarks.
	H. ′ ″	H. ′ ″	° ′		° ′	° ′ ″		
♃ April 17.	6 49 9	20 10 17	26 12,6	83½	18 7 S	196 12 37 E	4	
♀ —— 18.		Noon.	60 53,2	84	18 4½			
	14 48 12	4 8 40	21 59,5	84	18 5	196 1 7	4	
♄ —— 19.		Noon.	60 37,0	80	17 59½			
	7 41 32	20 55 12	35 26,7	80½	18 9	194 12 7	4	
☉ —— 20.		Noon.	60 8,1	82	18 8			
☽ —— 21.		Noon.	59 18,0	81	18 37½			Small rain at times.
	14 30 5	3 38 2	27 59,7	81½	18 40	192 33 0	4	
♃ —— 24.	14 25 29	3 20 40	30 40,5	79½	19 22	189 18 15	4	
	7 6 23	19 58 34	22 0,5	80⅚	19 36	188 31 0	6	
♄ —— 26.	14 17 30	3 5 48	33 0,2	78½	20 12	187 28 7	6	
	6 45 40	19 29 56	15 7,2	78¾	20 35	186 23 15	4	
☉ —— 27.		Noon.	55 17,2	79	20 39			
	15 3 35	3 45 59	24 29,3	78½	20 35	185 55 45	6	
	6 49 5	19 29 41	14 58,4	78	20 30	185 27 22	4	
☽ —— 28.		Noon.	55 11,3	79	20 26⅙			
	7 55 10	20 33 7	27 57,4	78½	20 24	184 40 50	6	
			At Annamocha.					
☽ May 12.	15 24 36	4 3 45	18 50,0	76	20 14	185 15 15	6	
			At Sea, among the Friendly Islands.					
☿ —— 14.	15 24 15	4 3 11	18 50,2	77	19 54	185 10 20	6	
	7 2 6	19 41 0	15 31,7	77½	19 51	185 10 0	4	
♃ —— 15.		Noon.	51 5,0	79½	19 49¾			
	7 57 16	20 37 31	26 46,5	77	19 44	185 29 45	4	
♀ —— 16.		Noon.	50 59,9	78	19 42			At anchor off Leffooga.
♄ —— 17.		Noon.	50 42,8	78	19 45⅙			
☉ —— 18.		Noon.	50 28,5	78	19 46⅙			
☽ —— 19.	15 27 36	4 8 23	17 18,6	77	19 46	185 37 27	6	
☿ —— 21.		Noon.	49 50,5	77¼	19 46⅓			
	15 52 19	4 33 4	12 0,3	75¾	19 46⅓	185 39 15	4	
☉ —— 25.		Noon.	49 6,9	77	19 45			
☽ —— 26.		Noon.	48 54,0	77½	19 45⅓			
	9 45 9	22 24 5	42 3,0	77	19 50	185 23 45	6	
♄ —— 30.		Noon.	48 12,2	78	19 49½			Fresh gales and squally.
☉ June 1.	7 7 43	19 45 33	14 50,1	77	19 55¼	185 10 48	5	
☽ —— 2.		Noon.	47 41,5	77½	19 55⅙			
	7 37 59	20 15 42	20 41,8	77	19 55¾	185 13 34	4	
♂ —— 3.		Noon.	47 33,5	78	19 55⅔			
☿ —— 4.	8 30 12	21 7 30	29 41,1	77½	19 55½	185 12 15	6	
♃ —— 5.	7 28 52	20 5 57	18 28,0	77	19 56	185 11 10	6	
	7 38 40	20 15 54	20 20,6	77	19 56	185 13 40	6	
♀ —— 6.	15 32 16	4 9 24	15 24,4	76½	19 55	185 12 40	6	
	15 37 23	4 14 37	14 24,5	76½	19 55	185 14 30	6	Fine weather.

1777.	Time per Watch N° 1.	Apparent Time.	Altitudes of the ☉'s L. L.	Therm.	Latitude in.	Longitude by Watch N° 1.	N° of Observations.	Remarks.
	H. ′ ″	° ′ ″	° ′		° ′	° ′ ″		
♃ June 7.	7 21 5	19 57 52	16 45,7	77	19 56 S	185 12 30 E	6	
☉ —— 8.		Noon.	46 33,5	78	20 23⅔			
☽ —— 9.		Noon.	45 47,7	78	21 4			
	15 26 27	4 1 44	16 20,3		21 5	184 53 0	6	
		At anchor at Tongotaboo.						
♂ —— 10.		Noon.	45 40,2	76	21 6¾			
	15 49 4	4 24 12	11 50,0	77	21 7	184 53 43	6	

By comparing the above with the longitude of Tongotaboo, deduced from a great number of Lunar observations, the Watch N° 1. differed only a mile or two.

Captain Cooke computes the daily rate of the Watch N° 1. to be losing 1″,783 per day on mean time, and that it was $12^h\ 34'\ 33''$,2 slow for mean time on the first of July.

♂ July 8.	7 16 28	19 26 26	14 18,5	78	21 5	184 55 45	8	
♄ —— 12.		Noon.	46 27,5	78	21 21⅔			
♀ —— 18.		Noon.	46 37,0	77½	21 21⅔			
♄ —— 19.		Noon.	46 37,3	78	22 26⅓			
	15 33 4	4 8 25	15 25,2	74	22 28	186 26 15	4	
	7 42 2	20 17 45	20 30,7	73½	22 33	186 32 27	4	
☉ —— 20.		Noon.	46 36,0		22 8¼			
		Eclipse of the Moon observed.						
	23 55 30	12 32 50	Beginning.			186 51 30		King.
	23 56 10	12 33 55				186 58 45		Bligh.
	23 56 10	12 33 35				186 1 15		Cooke.
	1 6 40	13 44 6	End.			186 20 45		Bligh.
	1 7 30	13 44 56				186 32 42		King.
	1 7 30	13 44 56				186 32 45		Cooke.

The above longitudes were deducted by comparison with the times set down in the Ephemeris.

	8 18 18	20 55 23	27 20,7	73	22 56	186 58 50	6	
☽ —— 21.		Noon.	46 24,5	73½	22 59½			
	15 51 2	4 29 1	11 10,2	73	23 8	187 7 7	4	
♃ —— 24.	6 54 59	19 52 43	14 35,3	73½	25 41	192 3 3	4	
♀ —— 25.		Noon.	44 24,0	73½	25 43⅔			
	14 55 37	3 55 33	16 48,5	75	25 46	192 35 57	4	
	6 42 37	19 46 3	13 14,1	75½	25 46	193 28 8	4	
♄ —— 26.		Noon.	44 13,2	74½	26 8¼			
	15 5 41	4 10 59	13 46,7	74	26 11	193 55 57	4	Fine clear weather.
	6 57 41	20 5 23	16 42,4	71½	26 45	194 31 33	4	
☉ —— 27.		Noon.	43 42,8	72	26 51⅔			

1777.	Time per Watch N° 1.	Apparent Time.	Altitude of the ☉'s L. L.	Therm.	Latitude in.	Longitude by Watch N° 1.	N° of Observations.	Remarks.
	H. ′ ″	H. ′ ″	° ′		° ′	° ′ ″		
☉ July 27.	14 58 50	4 8 18	14 3,0	72½	26 57 S	194 58 0 E	4	Fine clear weather.
☽ —— 28.	7 0 48	20 12 52	17 50,6	70½	27 31	195 36 34	5	
		Noon.	43 13,3	72	27 36			
♃ —— 31.	14 43 34	3 58 12	15 42,3	72	27 44	196 14 49	6	Do.
		Noon.	43 37,2	72	27 53			
	14 27 14	4 0 24	15 38,1	67	27 53	200 50 1	6	
♀ Aug. 1.	6 10 47	19 47 36	13 28,6	66	27 50	201 44 7	4	
		Noon.	43 57,0	66	27 49			
	14 27 30	4 8 8	14 22,0	72¼	27 45	202 41 5	4	
♄ —— 2.	5 44 30	19 24 19	10 10,5	73	27 31	203 42 45	3	A very bad horizon.
		Noon.	44 33,5	68	27 28			
	6 50 18	20 36 5	22 51,7	70	27 40	203 57 0	4	
☉ —— 3.		Noon.	44 33,3	70	27 43⅓			
☽ —— 4.		Noon.	44 57,7	70	27 33½			
	14 23 4	4 16 31	13 21,8	67	27 26	205 46 18	4	
♂ —— 5.		Noon.	49 57,5	67½	26 50½			
	14 16 3	4 13 8	14 32,0	67½	26 40	206 41 48	4	
	6 18 12	20 18 15	21 0,4	66	26 4	204 24 30	4	
☿ —— 6.		Noon.	47 10,0	67	25 55⅓			
	14 8 0	4 10 12	15 39,3	69¾	25 45	207 56 4	4	Fine weather.
	5 46 57	19 52 22	16 29,7	66	25 18	208 43 45	4	
♃ —— 7.		Noon.	48 12,3	67	25 8¼			
	13 48 24	3 56 0	19 3,0	69	24 57	209 15 28	4	
	5 33 54	19 44 8	15 40,5	68	24 8	210 2 52	4	
♀ —— 8.		Noon.	49 42,5	67½	23 55¾			
	13 53 9½	4 5 54	17 50,0	68	23 43	210 29 45	4	
	5 39 9	19 52 15	17 41,4	67½	23 23	210 33 45	6	
♄ —— 9.		Noon.	50 56,5	70	23 7½			
	13 52 0½	4 6 15	18 18,0	69	22 46	210 50 15	3	
☉ —— 10.		Noon.	52 58,7	72	21 12½			
	13 43 7	4 9 23	18 40,2	73½	20 50	211 17 54	6	
	5 11 7	19 28 41	14 29,9	75	19 48	211 35 30	4	Do.
☽ —— 11.		Noon.	55 16,0	77	19 14½			
	5 22 48	19 39 45	17 46,6	77½	17 54	211 28 51	4	
♂ —— 12.		Noon.	57 2,2	79	17 46¼			
	6 49 38	21 6 22	37 10,2	77	17 46	211 1 54	6	Cloudy weather
☿ —— 19.		Noon.	59 13,1	77½	17 46			
	6 34 24	20 51 26	34 18,5	78	17 46	211 2 22	6	at Oitipehea Bay, Otaheite.
♃ —— 20.		Noon.	59 34,4	78	17 45⅓			
	6 49 54	21 7 31	37 57,4	79¾	17 45	211 2 10	3	

Captain Cooke remarks, that by a mean of 50 days obſervations while among the Society Iſlands and Otaheite, the rate of the Watch N° 1. was 1″,69 loſing per day on mean time. It was 14^h 13′ 56″,1 too ſlow for mean time the 20th of November at Ulieta.

1777.	Time per Watch N° 1.	Apparent Time.	Altitude of the ☉'s L. L.	Therm.	Latitude in.	Longitude by Watch N° 1.	N° of Observations.	Remarks.
	H. ′ ″	H. ′ ″	° ′		° ′	° ′ ″		
☽ Dec. 8.	4 55 48	19 14 53	22 52,0	79½	15 59 S	207 44 5 5E	4	Squally weather.
♂ —— 9.		Noon.	82 38,0	79	15 42			
	14 14 0	4 32 30	25 39,3	81½	15 40	207 38 37	6	
	5 42 18	20 0 27	33 0,0	80½	14 42	207 37 15	4	
☿ —— 10.		Noon.	81 22,2	82	14 32			
	14 0 46	4 18 16	28 29,8	82½	14 21	207 29 49	4	Fair weather.
	4 40 25	18 56 36	18 3,2	81	13 55	207 14 9	4	
♃ —— 11.		Noon.	80 30,2	81½	13 45⅙			
	14 34 40	4 49 39	21 4,0	81	13 36	206 58 48	4	
	4 46 32	19 59 57	18 23,9	82	13 15	206 26 45	4	
♀ —— 12.		Noon.	79 43,0	82	13 1½			Cloudy at times.
	14 43 3	4 54 23	19 43,8	82¾	12 49	206 10 36	4	
	5 13 37	15 23 36	23 44,5	81	12 29	205 55 0	4	
♄ —— 13.		Noon.	78 54,2	82¼	12 17½			
	14 41 42	4 51 47	28 8,5	82	12 3	205 58 0	4	
	4 55 0	19 2 12	18 0,2	82¼	10 6	205 28 22	4	Do.
☽ —— 15.		Noon.	76 28,5	82	9 48⅔			
	14 47 14	4 47 29	20 10,7	82½	9 35	205 14 36	4	
	4 49 51	18 55 12	16 7,0	82	9 11	205 4 23	4	
♂ —— 16.		Noon.	75 23,6	82½	8 56¾			
	14 36 56	4 41 45	21 11,3	83¼	8 45	204 59 45	4	
	5 9 13	19 10 12	18 34,5	80¼	6 45	204 13 45	4	
♃ —— 18.		Noon.	72 47,0	81	6 23⅔			Fine weather.
	14 49 19	4 50 30	18 12,2	81	6 9	204 19 15	4	
	5 55 46	19 56 13	28 28,7	80	5 10	204 12 0	3	
♀ —— 19.		Noon.	71 18,0	81½	4 46½			
	14 38 55	4 38 33	20 23,0	81	4 44	204 3 15	4	
	5 54 5	19 51 56	26 56,9	79	3 50	203 40 53	3	
♄ —— 20.		Noon.	69 53,5	80	3 32			
	14 43 25	4 40 30	19 19,9	80	3 13	203 31 57	4	
	5 54 23	19 49 42	25 47,9	78½	2 16	203 10 15	4	Do.
☉ —— 21.		Noon.	68 26,2	80	2 2½			
	14 50 43	4 45 33	17 38,5	80½	1 47	203 4 10	4	
☽ —— 22.		Noon.	66 55,0	80	0 34⅓			
	14 8 7	4 1 36	26 52,1	80	0 21 S	202 52 5	4	
	5 21 1	19 12 59	16 21,0	77	0 27 N	202 33 39	4	
♂ —— 23.		Noon.	65 39,0	78¾	0 44¾			
	5 19 50	19 9 27	14 58,5	77	1 50	202 14 14	4	
☿ —— 24.		Noon.	64 19,2	78½	2 2½			
	14 24 43	4 15 27	22 48,2	78½	1 57	202 24 55	4	Do.
♃ —— 25.	14 43 32	24 34 14	18 36,9	79	1 56	202 30 30	4	
♄ —— 27.		Noon.	64 29,3	79	1 58⅔			
☽ —— 29.	14 46 46	4 34 59	18 29,0	81	1 57½	202 29 6	6	At Turtle Island.
1778.								
♃ Jan. 1.	6 29 33	20 16 30	29 55,0	79½	2 12	202 28 50	4	
♀ —— 2.		Noon.	63 23,0	80	2 27			

1778.	Time per Watch N° 1.	Apparent Time.	Altitudes of the ☉'s L. L.	Therm.	Latitude in.	Longitude by Watch N° 1.	N° of Observations.	Remarks.
	H. ′ ″	H. ′ ″	° ′		° ′	° ′ ″		
♀ Jan. 2.	5 16 49	19 3 9	13 5	81½	3 8N	202 25 4 E	3	Squally, with rain at times.
♄ —— 3.		Noon.	63 35,1	81⅓	3 22			
☉ —— 4.	5 37 53	19 24 35	17 25,2	81	3 54	202 34 34	4	
☽ —— 5.		Noon.	62 5,0	80½	4 8			
		Noon.	62 13,5	79	4 56⅙			
	14 42 18	4 29 49	18 22,1	78½	5 10	202 58 17	4	Fine weather.
♂ —— 6.	5 31 50	19 19 25	15 43,2	79	5 41	203 3 0	3	
☿ —— 7.	6 9 34	19 58 16	23 52,2	77⅚	6 51	203 26 30	4	
♃ —— 8.	5 41 5	19 35 0	18 22,8	79	7 40	204 50 9	4	
♀ —— 9.	5 28 14	19 22 40	15 33,7	79	8 3	205 3 58	4	Strong gales.
		Noon.	59 28,2	80	8 12⅚			
	14 54 45	4 48 50	12 52,8	79⅚	8 22	205 0 55	4	
♄ —— 10.	5 57 27	19 50 33	21 4,1	79	9 16	204 49 42	4	
		Noon.	58 19,2	79	9 30⅙			
	14 10 22	4 3 29	22 18,4	80	9 40	204 51 42	4	Flying clouds.
☉ —— 11.	5 26 28	19 18 52	13 45,8	78½	10 27	204 44 37	4	
		Noon.	57 14,0	77	10 44⅚			
	14 35 8	4 27 12	16 33,5	79½	10 58	204 41 58	4	
☽ —— 12.	5 33 3	19 23 30	14 9,2	79	12 0	204 21 3	3	
		Noon.	55 50,5	78⅚	12 17⅔			
	14 44 52	4 33 4	14 39,7	78½	12 35	203 49 16	4	
♂ —— 13.	5 55 13	19 40 17	16 58,0	77⅚	13 55	203 5 44	4	Fine weather.
		Noon.	54 6,0	77	14 12			
	14 43 48	4 27 41	15 3,0	78	14 32	202 50 3	4	
☿ —— 14.	5 51 15	19 32 22	14 32,8	77½	15 38	202 11 30	4	
		Noon.	52 30,5	78	15 57⅚			
	14 18 16	3 58 6	20 26,2	77	16 16	201 53 55	5	
♃ —— 15.	5 45 39	19 23 34	11 57,5	78	17 21	201 28 10	4	
		Noon.	50 59,0	78½	17 40⅙			
	14 22 39	3 59 35	19 21,2	77	17 57	201 15 16	4	Do.
♀ —— 16.	6 10 43	19 47 10	16 16,1	76	18 41	201 11 37	4	
		Noon.	49 50,2	76½	19 0⅚			
	14 36 16	4 11 37	16 20,5	77	19 14	200 41 27	4	
♄ —— 17.	5 56 3	19 20 53	12 22,8	78	20 8	200 51 36	4	
		Noon.	48 37,0	79	20 25			
	6 8 35	19 42 59	14 28,2	78	21 8	200 49 37	4	
☉ —— 18.	14 40 12	4 14 19	14 58,9	77½	21 17	200 46 50	4	
	5 50 9	19 24 5	10 30,1	75½	21 37	200 46 46	4	
☽ —— 19.		Noon.	47 47,0	76	21 50⅔			
	14 34 8	4 6 45	16 18,7	75⅚	21 51	200 28 34	4	
	5 57 0	15 28 52	11 26,0	74½	21 54	200 20 31	4	
♂ —— 20.		Noon.	47 47,0	75	21 52			At the island of Atowi.
	14 53 12	4 25 2	12 42,5	77½	21 56	200 20 45	4	
☿ —— 21.		Noon.	47 55,8	74⅚	21 56½			
	14 41 2	4 12 25	15 28,5	76½	21 56	200 21 37	4	
♀ —— 23.		Noon.	48 28,7	77½	21 56⅙			

1778.	Time per Watch N° 1.	Apparent Time.	Altitudes of the ☉'s L. L.	Therm.	Latitude in.	Longitude by Watch N° 1.	N° of Observations.	Remarks.
	H. ′ ″	H. ′ ″	° ′		° ′	° ′ ″		
♀ Jan. 23.	14 5 38	3 36 9	22 45,5	77	21 56 N	200 12 6 E	5	At Sandwich Islands.
	7 45 28	21 15 22	32 10,8	75	22 0	200 4 55	4	
♄ —— 24.		Noon.	48 40,1	76	21 54½			
☉ —— 25.		Noon.	48 53,5	76	21 55½			
	6 1 35	19 31 49	12 54,7	75½	21 28	200 16 57	4	
☽ —— 26.		Noon.	49 26,7	76	21 38			
	15 2 5	4 32 27	11 54,2	78	21 46	200 18 46	4	
♂ —— 27.		Noon.	49 42,7	75¾	21 33⅓			
	6 54 56	19 44 1	15 54,0	75½	21 20⅓	200 4 12	4	
☿ —— 28.		Noon.	50 14,2	75	21 21			
	15 5 43	4 34 19	11 51,2	77	21 36	199 57 36	4	
	5 55 5	19 22 52	11 17,0	75	21 46	199 47 20	4	
♃ —— 29.		Noon.	50 2,0	77	21 49			
	6 24 11	19 51 47	17 24,0	73	21 49	199 40 30	4	At anchor at the island of Neehow.
♀ —— 30.		Noon.	50 17,7	74	21 49	Mean of 3 Sextants.		
	14 12 18	3 39 48	23 9,0	77	21 49	199 45 15	4	
☉ Feb. 1.	5 52 50	19 19 20	14 1,0	77¼	21 49	199 34 50	4	At sea.
☽ —— 2.		Noon.	51 1,0	77	21 56½			
	14 38 9	4 5 31	18 25,1	77½	21 59	199 41 39	4	
	6 36 54	20 3 53	19 58,5	76	22 45	199 43 29	3	
♂ —— 3.		Noon.	50 14,0	76	23 1			
	14 45 15	4 12 38	16 25,4	75½	23 16	199 49 58	4	
	5 56 23	19 22 41	11 2,0	74½	24 15	199 34 12	4	Fine weather.
☿ —— 4.		Noon.	49 1,7	73½	24 31¼			
	3 3 44	4 30 12	12 21,6	77	24 50	199 37 4	4	
	6 9 24	19 37 15	13 19,0	74	25 53	199 58 18	4	
♃ —— 5.		Noon.	47 44,5	75	26 7½			
	14 41 4	4 8 28	16 10,4	75	26 30	199 51 50	4	Ditto.
	6 39 59	20 7 26	19 11,0	73	27 38	200 24 28	4	
♀ —— 6.		Noon.	46 28,7	74½	27 41½			
	6 1 58	19 30 29	11 18,4	72¼	28 38	200 9 21	4	Strong gales and hazy.
♄ —— 7.		Noon.	45 32,2	72½	28 55¾			
	14 56 44	4 24 12	12 10,7	72½	29 13	200 19 33	4	
	6 31 21	20 2 48	17 6,0	72½	30 2	200 53 58	4	
☉ —— 8.		Noon.	44 29,0	71	30 18			
	14 35 27	4 9 14	14 42,0	72½	30 26	201 28 28	4	
	6 13 19	19 49 40	14 24,2	71	30 54	202 7 14	4	
☽ —— 9.		Noon.	44 7,2	71½	30 59			Hazy.
	14 40 47	4 18 18	12 52,0	72	31 6	202 24 50	4	
	6 5 39	19 45 38	13 41,0	69	31 16	203 1 44	4	
♂ —— 10.		Noon.	44 4,0	66¼	31 21¾			
♀ —— 13.		Noon.	45 14,0	61½	31 21			
	6 41 59	20 34 58	23 28,2	61½	31 31¼	206 14 24	6	
♄ —— 14.		Noon.	45 8,5	60½	31 45			
	14 20 2	4 12 18	14 46,4	65	31 40	206 2 56	4	Fair weather.
☽ —— 16.		Noon.	43 39,5	60½	33 46¾			

1778.	Time per Watch N° 1.	Apparent Time.	Altitude of the ☉'s L. L.	Therm.	Latitude in.	Longitude by Watch N° 1.	N° of Observations.	Remarks.
	H. ′ ″	H. ′ ″	° ′		° ′	° ′ ″		
♂ Feb. 17.		Noon.	42 51,7	60½	34 54¾ N			
☿ —— 18.	5 30 42	19 23 46	9 14,0	57	36 9	206 9 44 E	4	Fair weather.
		Noon.	41 45,2	57½	36 22¾			
♃ —— 19.	5 35 9	19 28 36	9 56,2	53	37 15	206 13 37	4	
		Noon.	41 4,0	53½	37 25			
	13 43 44	3 38 38	19 11,1	60	37 29	206 34 36	4	
♀ —— 20.	6 16 56	20 15 27	8 6,3	55	37 59	207 27 58	4	Cloudy at times.
		Noon.	40 43,5	59	38 7½			
♄ —— 21.	14 10 22	4 11 13	13 29,0	65½	38 16	208 1 46	4	
		Noon.	40 6,0	59	39 5¾			
	13 54 4	4 3 37	13 9,1	60½	39 14	210 10 22	4	
☉ —— 22.	5 21 8	19 37 41	11 10,0	55	40 15	211 53 57	4	
		Noon.	39 15,5	58	40 18⅓			
	13 52 8	4 12 52	12 47,0	63	40 26	212 55 45	4	Fair.
	5 16 21	19 44 23	12 17,0	56	40 48	214 43 38	4	
☽ —— 23.	7 0 29	21 38 24	29 20,0	56	41 41	217 9 35	4	
♂ —— 24.		Noon.	38 33,0	54	41 44¾			
♃ —— 26.		Noon.	37 45,0	55	43 16¾			
	12 47 59	3 48 20	16 15,7	54	43 26	223 2 30	4	Very hazy.
♄ —— 28.	5 38 13	21 1 10	23 45,2	55	44 46	228 9 48	4	
☉ March 1.	4 18 35	19 43 15	12 19,0	49½	44 53	228 32 7	4	
☽ —— 2.		Noon.	37 38,0	60	44 54			
	12 35 11	4 0 32	15 3,0	55	44 48	228 41 0	2	
♂ —— 3.		Noon.	38 21,5	55	44 32½			
	12 2 42	3 32 18	19 50,7	51	44 28½	229 40 42	4	
	4 26 48	19 55 36	12 12,2	52	44 10	230 56 19	4	
☿ —— 4.		Noon.	39 12,7	50	44 5			
	11 40 12	3 18 6	22 27,7	55½	44 3	231 43 6	5	
♀ —— 6.		Noon.	39 53,0	49	44 10¾			
	12 58 53	4 50 33	8 11,0	55	44 20	234 59 42	4	
♄ —— 7.		Noon.	39 53,5	47	44 33½			
	11 49 7	3 44 3	19 13,8	58	44 33	235 45 53	4	Fresh gales, with hard squalls.
☿ —— 11.		Noon.	42 16,6	45½	43 44			
	11 33 23	3 28 53	23 16,6	48	43 46	235 38 20	4	
♃ —— 12.		Noon.	43 18,0	51	43 6			
♀ —— 13.	12 21 28	4 10 54	17 18,5	50	42 50	233 56 53	5	
	4 43 47	20 33 48	24 35,5	52	43 21	234 5 0	4	Fair weather.
♄ —— 14.		Noon.	43 54,5	53	43 16¾			
	12 12 59	4 1 57	19 0,6	53	43 10	233 45 0	6	
	4 47 13	20 30 32	24 41,5	47	42 49	232 15 0	3	
☉ —— 15.		Noon.	44 48,5	48	42 46½			
☽ —— 16.		Noon.	44 54,5	49	43 4			
	12 29 29	4 16 34	17 6,8	57	43 11	233 7 37	4	
	5 36 15	21 26 35	33 4,0	59	43 49	233 52 31	4	Squally.
♂ —— 17.		Noon.	44 26,0	60	43 56			
	12 51 6	4 43 30	12 28,8	60	44 10	234 12 1	5	

1778.	Time per Watch. N° 1.	Apparent Time.	Altitudes of the ☉'s L. L.	Therm.	Latitude in.	Longitude by Watch N° 1.	N° of Observations.	Remarks.
	H. ′ ″	H. ′ ″	° ′		° ′	° ′ ″		
☿ March 18.		Noon.	33 55,0	62¾	44 50½ N			Squally.
	12 8 25	4 0 16	48 51,0	60½	44 47	234 9 7 E	4	
	3 58 1	19 49 43	18 23,0	60½	44 46	234 2 26	4	Fair weather.
♃ —— 19.		Noon.	44 11,5	60½	44 57½			
	12 2 16	3 54 50	20 53,4	66½	45 16	234 15 0	4	
	4 7 55	20 1 25	20 25,3	56	45 26	234 30 51	4	
♀ —— 20.		Noon.	44 3,0	58¾	45 30½			
	12 18 11	4 11 40	18 18,3	58½	45 30	234 23 36	4	
	3 22 16	19 16 21	13 7,0	53½	45 40	234 29 16	4	Do.
♄ —— 21.		Noon.	44 6,0	59¾	45 51¼			
	3 43 39	19 42 52	17 24,0	55	47 4	235 38 17	4	Fair weather.
☉ —— 22.		Noon.	42 57,7	54½	47 23¼			
	11 48 50	3 47 54	21 51,1	54	47 36	235 34 50	4	
☽ —— 23.	12 46 34	4 41 53	13 30,6	52¾	48 5	234 35 54	4	
	3 7 57	19 2 13	11 15,1	48½	47 28	234 17 3	4	
♂ —— 24.		Noon.	43 27,5	48	47 41¼			
	12 23 35	4 20 11	17 22,3	58	47 52	234 50 0	4	
☿ —— 25.	12 12 56	4 6 26	19 32,0	55½	48 42	233 58 35	4	Hazy.
	4 38 18	20 29 28	25 19,3	54	48 23	233 20 15	8	
♃ —— 26.		Noon.	43 33,5	58	48 21¼			
	12 15 50	4 6 7	20 1,4	54	48 19	233 5 25	5	
	4 1 57	19 48 53	19 28,7	50¼	48 0	232 11 44	2	
♀ —— 27.		Noon.	44 23,0	50	47 55¼			
	13 18 18	5 12 11	10 40,1	50½	48 15	232 30 39	4	
	8 13 11	20 4 23	21 58,5	55	48 15	233 10 30	4	Fair weather.
♄ —— 28.	4 35 23	20 27 24	25 16,1	57	49 17	232 53 14	6	
☉ —— 29.		Noon.	43 36,2	61	49 29¼			
	12 33 4	4 27 24	17 14,7	59	49 33	233 50 48	4	At the entrance of King George's Sound.

The above set was taken in the entrance of the Sound about 5 or 6 miles of longitude West of Ship Cove where the Observatories stood. Therefore the Watch N° 1. gave the longitude of the Observatory =233° 56′ E. but a mean of all Captain Cooke's lunar Observations taken there is =233° 17′ 30″ E. or 38′½ W. of the longitude by the Watch. Captain Cooke deduced the mean rate of the Watch N° 1. (while at King George's Sound) to be losing 7″,00 per day on mean time; and to be 16ʰ 00′ 58″,45 too slow for mean time on the 16th of April at noon.

These are the numbers used to deduce the longitude by N° 1. as follows:

☽ —— 27.	3 13 27	19 4 7	20 47,5	53½	49 44	229 43 0	4	
♂ —— 28.		Noon.	53 51,7	54	50 0¼			
	2 45 47	18 27 31	15 16,0	50¼	51 31	227 25 18	5	Flying clouds.
☿ —— 29.		Noon.	52 16,7	50¼	51 54½			
	2 55 35	18 29 18	15 52,3	57½	53 9	225 20 40	4	
♃ —— 30.		Noon.	51 7,5	57	53 22½			

1778.	Time per Watch N° 1.	Apparent Time.	Altitudes of the ☉'s L. L.	Therm.	Latitude in.	Longitude by Watch N° 1.	N° of Observations.	Remarks.
	H. ′ ″	H. ′ ″	° ′		° ′	° ′ ″		
♃ April 30.	13 17 41	4 50 36	21 55,6	62¾	53 37 N	225 7 3 E	4	Flying clouds.
♀ May 1.	3 7 14	18 38 49	17 33,5	54	54 26	224 44 57	4	
		Noon.	50 5,0	60	54 43			
	13 41 51	5 14 14	18 10,9	62½	55 8	224 55 24	5	
♄ —— 2.	4 53 26	20 23 57	31 56,3	54	56 32	224 25 1	6	Fair weather.
		Noon.	48 16,0	61	56 50			
	13 37 13	5 4 46	20 10,0	61	57 14	223 39 25	6	
☉ —— 3.	3 11 58	18 34 37	17 32,0	61	58 10	222 23 54	4	
		Noon.	47 7,0	60½	58 17½			
	13 5 27	4 26 49	25 17,1	60½	58 16	222 12 27	4	
☽ —— 4.	2 36 11	17 52 16	12 16,0	54½	58 14	220 41 4	4	
		Noon.	47 20,0	62	58 22			
	13 56 46	5 13 39	19 26,7	67	58 33	220 52 18	4	Cloudy at times.
♂ —— 5.	2 31 27	17 46 41	11 50,0	54	58 26	220 25 51	4	
		Noon.	47 18,0	55	58 40½			
	14 39 43	5 57 49	13 59,5	66	58 48	221 7 24	4	
☿ —— 6.	2 40 8	17 57 12	13 26,2	62½	58 53	220 44 35	4	
		Noon.	47 8,5	61½	59 8¼			
	14 23 16	5 37 25	16 51,0	51	59 9	220 7 10	4	
♃ —— 7.	2 49 26	18 0 34	14 14,2	56½	59 23	219 18 10	4	Do.
		Noon.	47 6,6	60	59 27⅓			
	14 26 51	5 34 17	17 14,1	59½	59 28	219 0 7	4	
♀ —— 8.	3 2 16	18 8 8	15 23,6	56	59 12	217 56 5	4	
		Noon.	47 39,5	59½	59 11			
	14 26 42	5 32 4	18 3,5	58	59 17	217 49 45	4	
♄ —— 9.	2 54 43	17 58 26	14 26,3	58	59 26	217 21 15	4	Fair weather.
		Noon.	47 35,0	62½	59 31½			
	15 1 30	6 2 10	14 29,5	56	59 30	216 34 15	4	
☉ —— 10.	4 46 51	19 46 0	28 9,0	58½	59 15	216 10 8	4	
		Noon.	47 31,7	58½	59 10¾			
	13 3 21	4 1 2	29 44,1	56	59 54⅓	215 47 12	4	
☽ —— 11.	3 19 48	18 16 20	17 11,0	54	59 57	215 28 15	4	Do.
		Noon.	47 45,7	60	59 50½			
	4 39 39	19 26 11	27 0,2	54	60 47	212 51 27	4	
☉ —— 17.		Noon.	48 15,2	55	60 50½			
☽ —— 18.		Noon.	48 47,0	59	60 3¾			
	14 29 3	5 13 59	22 24,1	60	60 21¼	212 20 33	4	
♂ —— 19.	13 42 52	4 26 41	28 26,1	57	60 0	212 3 0	4	
☿ —— 20.	14 45 52	5 26 9	21 13,3	61	59 54	211 6 15	4	Do.
	3 17 1	17 56 13	16 37,7	52	59 39	210 51 54	4	
♃ —— 21.		Noon.	50 29,0	57	59 30⅔			
	15 15 11	5 50 25	18 19,8	64	59 22	209 51 58	4	
♀ —— 22.	4 2 57	18 34 34	21 32,0	52	58 36	208 57 15	4	
		Noon.	51 47,5	56	58 24¼			
	15 32 3	6 1 44	16 52,4	52	58 11	208 27 33	5	Do.
	4 26 35	18 57 32	24 42,4	52	59 0	208 47 0	4	

1778.	Time per Watch N° 1.	Apparent Time.	Altitudes of the ☉'s L. L.	Therm.	Latitude in.	Longitude by Watch N° 1.	No of Observations.	Remarks.
	H. ′ ″	H. ′ ″	° ′		° ′	° ′ ″		
♄ May 23.		Noon.	51 15,2	55	59 9 N	E		
	15 20 44	5 51 35	18 25,6	58	58 45	208 45 0	4	Hazy.
	4 0 37	18 28 53	21 8,2	57	58 17¼	208 5 45	4	
☉ —— 24.		Noon.	52 20,5	58½	58 14¼			
	14 34 34	5 3 14	24 49,5	57	58 18	208 11 45	4	
	4 11 8	18 38 41	22 31,6	54	58 22	207 54 29	6	Fine weather.
☽ —— 25.		Noon.	52 3,0	57½	58 41½			
	16 27 14	6 52 0	11 18,2	58½	58 57	207 13 35	4	
	3 49 48	18 11 39	19 18,3	54	59 12	206 28 39	4	
♂ —— 26.		Noon.	51 49,7	59½	59 9¼			
	14 38 32	5 4 27	24 56,7	58	59 13	207 29 40	6	Ditto.
☿ —— 27.	3 48 29	18 14 1	19 54,8	57	59 50¼	207 23 48	6	
♃ —— 28.		Noon.	51 25,0	57	59 50¾			
♄ —— 30.		Noon.	50 56,2	57	60 37			
	13 40 22	4 5 18	32 17,1	58	60 41	208 0 27	4	
☉ —— 31.	5 28 21	20 1 4	33 38,6	56	61 5⅓	209 12 30	4	
☽ June 1.		Noon.	Double Alt.		61 5⅓			Hazy weather.
	13 12 25	3 45 49	35 0,8	56	61 5⅓	209 23 15	5	
♂ —— 2.		Noon.	50 58,7	56	60 59¾			
	13 21 41	3 50 18	34 39,5	56	60 54	208 12 25	4	
	3 20 8	17 47 3	17 35,6	60	60 42	207 46 6	5	
☿ —— 3.		Noon.	51 27,7	60	60 38¼			
	3 35 12	18 0 38	19 14,0	56	60 7	207 23 14	4	
♃ —— 4.		Noon.	52 5,0	59½	60 9¼			
	14 48 36	5 14 15	24 48,8	60	59 58	207 28 37	4	
	6 26 14	20 51 24	40 6,4	60	59 51⅓	207 21 37	4	Fair weather.
♀ —— 5.		Noon.	52 31,2	59½	59 50¾			
	15 48 1	6 13 27	17 28,5	52	59 29	207 21 37	5	
	3 49 29	18 14 26	20 55,0	54	59 4	207 18 45	4	
♄ —— 6.		Noon.	53 50,2	58	58 37⅔			
☉ —— 7.		Noon.	54 30,5	60	58 4¼			
	10 4 5	19 34 56	31 33,2	55	57 50	207 19 37	5	Hazy weather.
☽ —— 8.		Noon.	54 47,5	55	57 52¼			
	14 26 24	4 51 57	28 0,0	54	57 49	207 30 15	4	
♃ —— 11.	4 5 40	18 28 7	22 53,0	52	56 51	206 47 44	4	
♀ —— 12.		Noon.	55 54,2	53	57 3¼			
	13 32 22	3 52 22	36 14,6	53	56 54¼	206 19 0	5	
	3 49 46	18 8 46	20 12,0	55	56 26¼	205 59 30	4	
♄ —— 13.		Noon.	56 12,5	58	56 49			
	14 1 36	4 19 50	32 44,9	58	56 32	205 46 15	4	Fresh breezes.
☉ —— 14.		Noon.	56 43,0	58	56 22¼			
	14 57 24	4 50 18	28 39,4	58	55 54	204 22 18	4	
☿ —— 17.		Noon.	57 50,0	60	55 24¼			
	15 4 56	5 2 24	26 59,1	60	55 25	200 38 0	4	Fine weather.
	5 11 12	19 8 40	28 35,1	55½	55 24⅔	200 41 18	5	
♃ —— 18.		Noon.	57 50,0	61	55 24¼			

1778.	Time per Watch N° 1.	Apparent Time.	Altitude of the ☉'s L. L.	Therm.	Latitude in.	Longitude by Watch N° 1.	N° of Observations.	Remarks.
	H. ′ ″	H. ′ ″	° ′		° ′	° ′ ″		
♃ June 18.	3 59 12	17 49 57	7 34,4	60	55 24 N	199 49 55 E	5	Fine weather.
♀ —— 19.		Noon.	58 20,5	55¾	55 18			
	17 0 18	6 48 0	12 8,4	59½	55 2	198 45 27	4	
♄ —— 20.	4 12 52	17 58 45	18 40,5	54½	54 57	197 50 44	4	
		Noon.	58 32,5	54	54 44			
☉ —— 21.	5 6 5	18 49 28	25 48,5	54½	54 22	197 15 51	4	Cloudy at times.
		Noon.	58 59,4	55½	54 17⅔			
	16 36 10	6 18 25	16 6,3	56	54 14	197 0 45	4	
☽ —— 22.	4 41 5	18 19 13	21 20,1	54	53 50	196 25 36	5	
		Noon.	59 29,5	54	53 52			
	15 13 44	4 50 8	28 46,0	55	53 42	195 33 45	6	
☿ —— 24.	5 36 23	19 10 12	28 48,5	54	54 8	194 57 42	6	
♃ —— 25.		Noon.	59 10,0	52½	54 4			
	7 13 30	20 40 40	41 53,8	54	53 46	193 19 30	3	
♀ —— 26.	4 51 55	18 18 11	21 9,7	53½	53 44	193 19 10	6	Fine weather.
♄ —— 27.		Noon.	59 42,0	53½	33 51¼			
	7 58 43	21 25 14	47 41,5	53	53 58	193 10 46	4	
☿ July 1.	5 32 30	18 59 44	26 51,4	56	53 59	193 12 55	4	At Samgonooda Bay.
♃ —— 2.		Noon.	59 34,2	56	54 20			
	15 47 9	5 13 45	25 1,2	58	54 28	193 8 15	5	
♄ —— 4.		Noon.		54½	55 49½	by Double Alt.		
	14 33 4	4 13 49	33 22,5	54½	55 55	196 52 36	4	
☉ —— 5.		Noon.	56 9,5	54½	56 29⅔			
	5 4 30	18 52 59	25 53,4	55	56 50	198 50 5	4	Cloudy weather.
☽ —— 6.		Noon.	55 38,7	57	56 55			
	15 20 20	5 11 27	25 16,0	56½	56 55	199 30 7	10	
	5 30 26	19 22 56	29 52,7	60½	57 6¼	199 51 20	4	
♂ —— 7.		Noon.	53 21,5	54	57 6¼			
	14 58 22	4 52 12	27 53,5	54	57 7	200 11 45	4	
	4 38 33	18 33 36	23 9,7	55	57 8	200 30 16	4	Fair weather.
☿ —— 8.	4 24 8	18 43 3	24 20,7	59	57 39	201 0 4	4	
♃ —— 9.		Noon.	54 24,0	59	57 49¼			
	15 19 48	5 19 16	24 1,8	58	58 12	201 37 0	3	
♀ —— 10.		Noon.	53 50,5	60	58 16¾			
	13 52 37	3 49 24	35 37,2	62	58 15¾	200 57 12	6	
	5 2 37	18 55 52	25 44,3	60	58 2	200 4 30	4	
☉ —— 12.		Noon.	53 39,0	61	58 12¼			
	15 52 50	5 45 59	20 16,0	60	58 30	200 3 12	3	Foggy at times.
	5 23 20	19 11 38	27 43,2	58½	58 19	198 50 21	4	
☽ —— 13.		Noon.	53 29,5	59½	58 13¼			
	15 9 15	4 57 15	26 29,8	58	58 9	198 46 12	3	
	4 57 26	18 44 36	24 0,3	59	58 8	198 34 6	3	
♂ —— 14.	5 31 29	19 18 43	28 22,6	58	58 22	198 34 16	4	Fair.
☿ —— 15.	4 40 20	18 24 38	21 9,6	59	58 23	197 47 45	4	
♃ —— 16.		Noon.	52 48,5	59	58 27⅓			
	15 21 41	6 4 33	17 20,4	58½	58 28	197 28 40	4	

1778.	Time per Watch N° 1.	Apparent Time.	Altitudes of the ☉'s L. L.	Therm.	Latitude in.	Longitude by Watch N° 1.	N° of Observations.	Remarks.
	H. ′ ″	H. ′ ″	° ′		° ′	° ′ ″		
♃ July 16.	4 29 44	18 16 44	19 22,8	53	58 49 N	197 7 9 E	3	Fair weather.
♀ —— 17.		Noon.	52 12,0	48	58 54			
♄ —— 18.		Noon.	51 28,2	61	59 27¼			
	15 19 5	5 1 36	25 14,0	60	59 37	197 22 40	4	Do.
	5 2 31	18 45 20	23 28,0	60	59 38	197 26 48	4	
☉ —— 19.		Noon.	51 6,3	63	59 38⅕			
	4 53 5	18 35 53	22 9,7	64	59 37	197 23 37	4	
☽ —— 20.		Noon.	50 56,7	65	59 37			
	16 11 8	5 54 3	18 19,4	65	59 37	197 27 9	4	
♂ —— 21.		Noon.	50 57,0	62½	59 25			
☿ —— 22.	5 12 12	18 53 32	23 41,6	61	58 45	196 38 24	4	Do.
♃ —— 23.	7 43 58	21 14 48	41 19,0	57	58 7	194 20 15	4	
♀ —— 24.		Noon.	51 38,2	57	58 6¼			
♄ —— 25.	14 1 31	3 20 57	36 49,6	58	58 30	194 29 24	3	
	5 13 6	18 33 8	20 43 4	50½	58 30	191 22 30	4	
☉ —— 26.		Noon.	50 43,5	52	58 36¼			
	6 44 30	20 2 36	31 51,5	52	59 3	191 6 40	4	
☽ —— 27.	14 18 43	3 34 31	34 30,7	60	59 19	190 31 24	4	Do.
	5 9 12	18 23 29	19 12,8	54	59 40	190 22 39	4	
♂ —— 28.		Noon.	48 57,7	54	59 55½			
☿ —— 29.	16 24 33	5 28 46	19 54,8	56	60 15	187 33 45	4	
♃ —— 30.	6 7 44	19 17 18	25 13,6	58	60 57	188 59 37	4	
♀ —— 31.		Noon.	49 9,5	58	61 11	Double Alt.		
	15 36 5	4 49 28	24 14,3	58	61 25	188 54 55	6	Cloudy at times.
	5 12 3	18 29 48	19 17,5	57	61 54	190 50 58	4	
♄ Aug. 1.		Noon.	45 58,0	57	61 57½			
☉ —— 2.	5 5 23	18 28 29	18 27,8	59	62 21	192 5 40	4	
☽ —— 3.		Noon.	44 49,7	62	62 35			
☿ —— 5.	5 42 38	19 11 47	22 40,9	58	64 37	193 27 0	4	
♃ —— 6.		Noon.	44 37,2	60	64 39¼			
	14 42 8	4 9 3	26 37,0	60	64 44	192 52 16	4	
♄ —— 8.	5 41 19	19 3 50	20 56,0	53	65 46	191 36 47		
☉ —— 9.	16 33 46	5 53 30	15 1,0	53	65 40	190 53 50	5	Fair weather.
	5 56 54	19 10 48	21 23,6	50	65 38	189 24 7		
☽ —— 10.		Noon.	39 53,0	47½	65 36			
	16 8 6	5 22 17	17 54,3	47	65 42	189 26 36	4	
	5 33 47	18 53 37	19 22,6	48	66 0	190 49 10	4	
♂ —— 11.		Noon.	39 6,0	54	66 5¼			
	7 49 38	21 12 24	31 39,7	55	66 17	191 26 18	3	Hazy.
☿ —— 12.		Noon.	38 32,2	55	66 20½			
	5 53 31	19 18 13	21 10.6	55	66 33	191 54 6	4	
♃ —— 13.		Noon.	38 3,5	55	66 32½			
	16 4 2	5 29 40	16 20,0	59	66 36	192 5 36	4	Fine weather.
♄ —— 15.		Noon.	35 38,7	55	68 18			
	5 47 25	19 35 10	20 31,0	55	70 20	197 21 25	4	
☽ —— 17.		Noon.	32 47,4	50	70 33¼			

1778.	Time per Watch N° 1.	Apparent Time.	Altitudes of the ☉'s L. L.	Therm.	Latitude in.	Longitude by Watch N° 1.	N° of Observations	Remarks.
	H. ′ ″	H. ′ ″	° ′		° ′	° ′ ″		
☽ Aug. 17.	5 10 35	19 3 6	17 35,7	45	70 26¼ N	198 28 7 E		Fair weather.
♂ —— 18.		Noon.	32 19,0	52	70 44		4	
	14 55 26	4 56 39	18 17,4	52	70 32	198 2 56	4	Do.
	6 27 59	20 14 43	23 4,5	53	69 56	196 45 51		
☿ —— 19.		Noon.	32 35,8	51	70 6⅔			
♀ —— 21.		Noon.	32 30,0	53½	69 32		4	
	14 59 13	4 42 25	17 59,0	53	69 28	195 49 6	3	
♄ —— 22.		Noon.	32 9,0	53	69 34			
	6 47 34	20 26 30	22 57,4	56	69 33	194 37 34	4	
	5 31 36	18 58 12	15 28,6	56	69 32	191 26 3	4	
☽ —— 24.		Noon.	31 31,5	49½	69 30½			
	14 14 50	3 34 57	22 30,0	49	69 26	189 48 10	8	Flying clouds.
	7 20 22	20 33 9	22 57,5	54½	69 29½	188 24 24	4	
☿ —— 26.		Noon.	30 43,5	54½	69 36			
	15 8 22	4 4 7	19 30,0	54½	69 33½	183 30 0	4	
♃ —— 27.		Noon.	30 25,0	54½	69 33½			
	14 41 56	3 36 49	21 18,5	54	69 29	183 12 22	4	
♀ —— 28.		Noon.	31 21,2	56½	69 17			
	16 22 52	5 16 13	12 49,7	57	69 10	182 43 10	4	Rainy weather.
♂ Sept. 1.	7 27 9	20 49 58	22 56,1	56	66 47	189 35 21	4	
☿ —— 2.		Noon.	31 12,2	62	66 37½			
	14 47 26	4 11 52	17 40,5	62	66 25	189 58 21	4	
	4 38 41	18 4 2	17 26,7	60	65 43	190 8 14	5	
♃ —— 3.		Noon.	31 59,7	58	65 28			
	15 40 20	5 2 42	12 39,5	57	65 20	189 20 4	4	
	6 57 22	20 17 19	20 30,0	55	64 53	188 39 49	4	
♀ —— 4.		Noon.	32 27,5	55	64 38			
	15 20 45	4 40 38	14 51,0	55	64 26½	188 36 48	4	
♄ —— 5.		Noon.	32 35,0	59	64 8⅙			
	6 13 37	19 53 39	17 58,5	59	63 53½	193 28 15	4	Hazy.
☉ —— 6.		Noon.	32 25,5	58	63 55½			
	15 35 15	5 18 26	10 14,5	58	64 1⅓			
	5 44 14	19 29 45	15 4,2	58½	64 13	194 40 45	4	
☽ —— 7.		Noon.	31 42,5	58	64 16			
	15 33 29	5 21 14	9 34,2	58	64 21	195 29 10	4	
	5 19 56	19 11 24	12 49,6	59	64 21	196 5 57	4	
♂ —— 8.		Noon.	31 15,5	63	64 22			
	14 56 19	4 52 52	12 14,6	63	64 20	197 19 15	5	
☿ —— 9.	14 7 59	4 11 35	16 1,7	59	64 41	198 38 31	4	Fine weather.
♃ —— 10.	15 25 7	5 4 4	10 20,9	58½	64 27	198 25 51	4	
	5 24 17	19 23 53	13 34,4	57	64 17½	198 53 21	4	
♀ —— 11.		Noon.	30 8,0	57	64 20⅝			
	15 5 34	5 11 6	9 17,8	58	64 21	199 13 55	4	In Norton Bay.
	6 35 6	20 36 18	13 38,4	57	64 30⅔	198 4 37	4	
♄ —— 12.		Noon.	29 35,2	57	64 30⅔			
	5 41 17	19 42 57	14 16,3	57	64 30⅔	198 4 48	3	Very fine weather.

1778.	Time per Watch N° 1.	Apparent Time.	Altitude of the ☉'s L.L.	Therm.	Latitude in.	Longitude by Watch N° 1.	N° of Observations.	Remarks.
	H. ′ ″	H. ′ ″	° ′		° ′	° ′ ″		
☉ Sept. 13.		Noon.	29 10,5	53	64 31½ N	E		Fine weather.
☽ —— 14.		Noon.	28 48,5	49	64 31⅙			
	5 24 41	19 29 12	12 15,5	52	64 16⅚	198 33 33	4	
♂ —— 15.		Noon.	28 35,7	55	64 20¼			In Norton Bay.
	6 9 28	20 16 44	15 32,6	52	64 20⅓	199 7 44	4	
☿ —— 16.		Noon.	28 15,5	55	64 20⅓			
	5 1 18	19 7 33	9 26,8	55½	64 19½	198 45 52	4	Very fine weather.
♃ —— 17.	5 11 22	19 18 35	10 15,5	55	63 46	198 53 18		
♀ —— 18.		Noon.	28 10,0	55	63 37			
	14 31 12	4 34 31	10 55,7	55	63 38	197 52 45	4	
	5 23 41	19 43 51	12 23,5	56	63 36	197 10 22	4	
♄ —— 19.		Noon.	27 43,0	56	63 43⅙			
	5 20 23	19 6 42	8 17,6	56½	63 48	193 23 18	4	Flying clouds.
☉ —— 20.		Noon.	27 23,5	54	63 37⅔			
☽ —— 21.		Noon.	27 28,5	54	62 58⅙			
	6 42 39	20 16 0	15 31,2	54	61 56	189 57 0	4	
♂ —— 22.		Noon.	28 26,0	57	61 47			
	7 52 3	21 18 40	21 50,5	54	60 30	188 0 31	5	Do.
☿ —— 23.		Noon.	29 39,8	54	60 20⅔	Double Alt.		
	6 48 49	20 20 51	16 36,3	54	59 45	189 27 15	4	
♃ —— 24.		Noon.	30 9,0	54	59 17¾			
♄ —— 26.		Noon.	30 3,0	55	58 36⅚			
	6 48 41	20 25 36	16 30,7	55	58 35	190 16 10	4	
☉ —— 27.		Noon.	29 40,0	57	58 36			
	14 31 8	4 9 48	12 21,8	57	58 36⅔	190 40 0	4	
	5 47 48	19 28 21	9 39,7	59	58 14	191 4 31	4	
☽ —— 28.		Noon.	29 49,5	59	58 2¾			
	5 56 44	19 44 21	11 41,6	57	57 9	192 43 36	4	
♂ —— 29.		Noon.	30 29,0	56	57 0¾			
	14 50 40	4 42 8	8 22,3	56	56 51	193 38 15	4	
	6 12 33	20 4 33	14 3,9	53	56 35	193 42 45	4	
☿ —— 30.		Noon.	30 35,0	54	56 30⅙			
	13 48 8	3 40 32	15 45,9	55	56 28	193 46 18	4	
	5 51 29	19 14 44	11 38,7	59	55 43	193 54 27	3	
♃ Oct. 1.		Noon.	31 13,2	60	55 29			
	5 44 12	19 36 28	10 39,7	59	54 7	193 32 20	4	
♀ —— 2.		Noon.	32 16,0	58	54 2¾			
	6 27 44	20 23 34	16 41,7	58	53 59	194 20 6	4	At Samgonooda.
☿ —— 28.		Noon.	22 46,5	56	53 59			
	6 59 23	20 54 22	12 13,8	56	53 41	191 17 0	4	
♃ —— 29.		Noon.	22 32,0	56	52 53⅔			
♀ —— 30.	13 2 47	3 8 44	11 20,1	55	53 45	193 57 48	4	
♄ —— 31.		Noon.	23 44,0	49¾	52 1½			
	6 53 20	21 6 2	14 55,4	54	50 8	195 49 45	4	
☉ Nov. 1.		Noon.	25 30,2	53	49 55¾			
♂ —— 3.		Noon.	26 47,0	47	48 1			

1778.	Time per Watch N° 1.	Apparent Time.	Altitudes of the ☉'s L. L.	Therm.	Latitude in.	Longitude by Watch N° 1.	N° of Observations.	Remarks.
	H. ′ ″	° ′ ″	° ′		° ′	° ′ ″		
♂ Nov. 3.	5 46 26	20 16 8	10 30,7	60	46 4 N	199 43 36 E	3	
☿ —— 4.		Noon.	28 45,0	60	45 44½			
♀ —— 6.		Noon.	31 22,0	61	42 29¼			
	12 45 45	3 22 24	15 18,7	60	42 19	201 24 7	5	
☉ —— 8.		Noon.	32 39,5	59	40 38			
	13 4 44	3 44 46	12 32,8	62½	40 29	202 15 0		
♂ —— 10.	5 35 48	20 25 15	14 36,1	69	38 41	204 31 53	4	
☿ —— 11.		Noon.	33 47,5	67	38 38¼			
	12 57 21	3 50 10	12 12,0	67	38 34	205 17 31	3	
	4 53 46	19 49 49	8 54,5	67	38 22	206 3 10	4	
♃ —— 12.		Noon.	33 56,0	67½	38 14¼			
♄ —— 14.	5 8 0	20 6 45	13 40,4	65	33 44	206 52 45	4	
☉ —— 15.		Noon.	37 49,0	65	33 32¾			
☽ —— 16.		Noon.	38 19,0	66	32 47			
	13 1 1	4 0 30	12 53,3	65	32 42	206 54 30	3	
♂ —— 17.		Noon.	38 45,0	70	32 26			
	13 15 39	4 15 1	10 8,7	76½	32 26	207 2 30	4	
	4 58 31	20 1 31	12 49,7	71	32 42	208 7 12	4	
☿ —— 18.		Noon.	37 55,7	72	32 40¾			
♀ —— 20.		Noon.	39 35,7	67	31 33			
	13 27 46	4 21 35	9 12,0	68	29 58	205 44 40	4	Bad observing.
♄ —— 21.		Noon.	42 1,0	68	27 53¼			
	13 0 10	3 58 44	15 31,2	68	27 36	206 19 57	4	
	5 32 39	20 28 29	20 33,5	67	26 31	206 17 45	4	
☉ —— 22.		Noon.	43 24,0	67	26 17½			
	13 13 54	4 9 44	13 40,0	68	26 5	206 18 32	4	
	4 46 57	19 41 59	12 27,6	69	25 8	206 9 3	4	
☽ —— 23.		Noon.	44 41,0	72	24 49			
	13 40 28	4 35 0	9 24,6	73½	24 23	206 1 12	4	
♂ —— 24.		Noon.	46 38,7	71	22 35¼			
☿ —— 25.		Noon.	47 51,2	78	21 16			
	13 16 32	4 3 22	17 8,6	79	21 15	204 10 49	4	
	5 3 33	19 48 2	15 24,4	77¾	20 58			
♃ —— 26.		Noon.	47 54,4	79	20 57¼			
	13 37 18	4 20 35	13 39,6	76¼	20 58	203 19 55	5	
	5 2 45	19 45 14	14 44,2	77¾	21 0	203 20 52	4	
♀ —— 27.	4 44 54	19 28 8	11 2,0	76½	21 21	203 24 32	4	
♄ —— 28.		Noon.	27 20,7	76	21 9¾			
	14 0 13	4 43 32	8 42,9	76	21 4	203 26 34	4	
☉ —— 29.		Noon.	47 9,5	76½	21 8⅓			
	12 45 37	3 29 26	23 19,9	76¾	21 19	203 37 15	4	
☽ —— 30.		Noon.	47 9,2	77	21 0⅓			
	13 42 35	4 27 25	17 7,0	75	20 51	203 56 15	4	

*** From the 8th of Nov. to the 13th of Dec. the long. by the Watch N° 1. must be lessened by 11″ on account of an error in computing its rate. J. K.

1778.	Time per Watch N° 1.	Apparent Time.	Altitude of the ☉'s L. L.	Therm.	Latitude in.	Longitude by Watch N° 1.	N° of Observations	Remarks.
	H. ′ ″	H. ′ ″	° ′		° ′	° ′ ″		
♂ Dec. 1.		Noon.	47 17,0	77¾	20 43⅓ N			Bad observing.
☿ —— 2.	5 28 24	20 12 22	20 5,1	75	20 19	203 49 39 E	4	
		Noon.	47 34,5	16	20 17½			
♃ —— 3.	13 23 51	4 7 28	16 8,0	77½	20 17	203 49 54	4	
		Noon.	47 25,0	76	20 21½			
♀ —— 4.	4 55 40	19 40 13	13 22,7	75	20 37	204 6 20	3	
		Noon.	46 53,7	75	20 40⅓			
	13 45 22	4 29 47	14 24,5	77	20 28	204 4 45	4	
	Eclipse of the Moon observed on board the Resolution.							
	15 19 0	6 3 25	Beginning			204 40 45		
	17 43 0	8 27 25	End			204 29 15		
	The times put down are the mean as observed by Capt. Cooke and Lieut. King; the former observing with a Sextant Telescope magnifying about 4 times; and the latter with a Night Telescope, with the aperture reduced to about ⅓ of its common size.							
	The penumbra was noted at least 10 minutes before and after the beginning and end of the eclipse. J. K.							
	5 5 59	19 51 30	15 24,1	76	20 32	204 20 52	4	
♄ —— 5.		Noon.	47 3,9	76	20 22½			
☉ —— 6.	5 3 46	19 47 38	14 51,5	74½	20 18	204 14 4	4	
♂ —— 8.		Noon.	46 12,0	74¼	20 49¾			
	5 7 19	19 50 39	15 1,1	76	20 42	204 9 9	4	
☿ —— 9.		Noon.	46 39,0	76	20 30			
	5 5 58	19 49 16	14 48,0	76	20 40	204 11 23	4	
♃ —— 10.		Noon.	46 23,0	76	20 30¾			
♀ —— 11.	4 50 42	19 33 18	11 29,6	75	20 26½	204 23 6	4	
♄ —— 12.		Noon.	46 16,5	75¾	20 28			
	5 12 57	19 55 19	16 17,6	74½	20 1⅔	204 14 9	4	
☉ —— 13.		Noon.	46 37,5	74½	20 1⅔			
	5 16 45	19 59 0	16 46,0	76	20 16	204 16 30	4	
☽ —— 14.		Noon.	46 6	76	20 29¾			
	4 44 39	19 26 47	10 16,0	77½	20 24	204 20 37	4	
♂ —— 15.		Noon.	45 58,5	77½	20 32			
	4 53 42	19 37 42	12 17,6	76½	20 40	204 52 51	4	
☿ —— 16.		Noon.	45 46,0	76	20 42			
	1 33 47	4 17 31	13 12,5	76	20 44	204 51 33	4	
♃ —— 17.		Noon.	46 9,0	75	20 16½			
♀ —— 18.		Noon.	46 27,0	75	19 55¾			
	5 35 58	20 13 13	20 41,4	74¾	19 42	204 45 35	4	
♄ —— 19.		Noon.	46 35,5	74	19 47			
♂ —— 22.		Noon.	45 52,0	74½	20 28½			
♃ —— 24.		Noon.	46 27,0	74	19 55			Cloudy weather.
♀ —— 25.		Noon.	46 51,2	74	19 32½			
	12 58 0	3 38 48	22 12,7	74	19 25	204 56 50	6	
	5 49 0	20 29 17	22 58,7	71½	19 22	204 53 18	4	

1778.	Time per Watch N° 1.	Apparent Time.	Altitudes of the ☉'s L. L.	Therm.	Latitude in.	Longitude by Watch N° 1.	N° of Observations.	Remarks.
	H. ′ ″	H. ′ ″	° ′		° ′	° ′ ″		
♄ Dec. 26.		Noon.	47 0,7	71¼	19 24¾ N	E		Cloudy weather.
☉ —— 27.	5 4 1	19 43 34	14 11,5	72	19 16	204 47 35	4	
		Noon.	47 5,0	73½	19 22½			
☽ —— 28.	13 24 56	4 4 34	14 33,7	74	19 15	204 50 50	4	
		Noon.	47 22,8	73⅓	19 7⅓			
1779. ♀ Jan. 1.	13 31 37	4 10 16	15 27,4	74	19 15	204 41 18	4	
	14 4 9	4 42 12	9 2,1	76¾	19 26	204 53 12	4	
♄ —— 2.	5 1 45	19 40 17	13 31,2	75½	19 26	205 3 35	4	
		Noon.	47 28,0	75	19 22½			
☉ —— 3.	4 50 12	19 25 56	10 51,3	74½	19 11	204 26 38	4	
		Noon.	47 45,0	75	19 11			
	13 20 42	3 55 51	18 33,9	75½	19 10	204 19 25	4	
	5 31 11	20 5 14	18 59,8	76	19 3	204 6 14	4	
☽ —— 4.	13 48 18	4 21 34	13 36,5	75	18 58	203 56 9	4	
	5 19 35	19 52 8	16 21,7	74	19 0	203 48 29	4	
♂ —— 5.		Noon.	48 9,0	74	18 59⅓			
	13 54 49	4 26 28	12 37,3	75	19 4	203 36 58	4	
	4 59 25	19 30 46	12 7,3	75	18 55	203 35 0	4	
☿ —— 6.		Noon.	48 18,0	75½	18 57			
	5 58 4	20 28 31	23 36,2	72	19 0	203 26 37	4	
♃ —— 7.		Noon.	47 20,2	72	19 1¼			
	5 15 21	19 46 25	15 23,7	71½	19 0	203 39 15	4	
♀ —— 8.		Noon.	48 29,0	71	19 1			
♄ —— 9.	5 7 21	19 38 24	14 2,3	71	18 42	203 47 57	4	
☉ —— 10.	5 45 18	20 16 14	21 36,9	73½	18 52	203 50 36	4	
☽ —— 11.		Noon.	49 0,6	72	18 55½			
♂ —— 12.		Noon.	49 29,8	77	18 35¾			
	4 55 59	19 25 24	11 31,5	75	18 47	203 34 44	4	
☿ —— 13.		Noon.	49 19,0	77	18 56½			
	13 43 2	4 12 11	16 2,0	76	19 2	203 32 45	4	
♃ —— 14.		Noon.	49 17,7	75	19 8			
♀ —— 15.		Noon.	49 30,2	76	19 7½			
♄ —— 16.		Noon.	49 22,3	76½	19 20½			

At Sandwich Islands.

The rate of the Watch N° 1. was losing 9″,6 per day on mean time; on the 2d of February it was $14^h\ 41'\ 1'',1$ slow for mean time at Keragegooa Bay.

♀ Feb. 5.	13 44 55	4 13 16	18 32,9	74½	19 34	204 20 12	4	
♃ —— 17.	14 27 38	4 56 6	10 29,4	75	19 28	203 52 8	4	
	14 32 22	5 0 9	9 27,8	76	19 28	203 52 27	4	
♂ —— 23.		Noon.	59 57,5	76	19 53			
	14 12 16	4 41 25	14 31,3	76½	19 51	203 38 10	4	
	5 25 30	19 54 16	22 20,2	75	20 29	203 24 14	4	
☿ —— 24.	13 40 6	4 8 14	21 44,2	76½	20 47	203 18 6	4	

1779.	Time per Watch N° 1.	Apparent Time.	Altitudes of the ☉'s L. L.	Therm.	Latitude in.	Longitude by Watch N° 1.	N° of Observations.	Remarks.
	H. ′ ″	H. ′ ″	° ′		° ′	° ′ ″		
☿ Feb. 24.	5 32 22	19 58 51	23 37,2	77	20 39 N	202 50 15 E	4	
♃ —— 25.	14 44 39	5 12 7	7 41,5	75	20 39	203 3 4	4	
	4 50 45	19 17 6	14 13,9	75	21 5	202 43 23	4	
♀ —— 26.	14 56 58	4 23 17	18 38,5	76	21 12⅔	202 41 13	4	
	5 37 13	20 2 38	24 11,9	76	21 50½	202 24 17	4	
♄ —— 27.	5 54 2	20 17 23	27 9,5	76½	22 12	201 30 33	4	
☉ —— 28.	14 33 29	4 52 44	12 12,9	76	21 56½	200 44 46	4	
☽ March 1.		Noon.	60 7,7	77	21 56¾			Mean of two Sextants when at anchor at the island of Atowi in Oimea Road.
	13 50 27	4 8 26	22 4,6	77	21 56¾	200 20 33	4	At Atowi.
☿ —— 3.	14 38 8	4 56 58	11 42,3	75	Do.	200 21 58	4	
♄ —— 6.	14 24 40	4 44 46	14 55,3	74½	Do.	200 23 36	4	
☽ —— 8.	14 57 2	5 15 46	8 15,8	74	21 49½	199 51 16	4	At Oneehow, at anchor.
♃ —— 11.		Noon.	64 7,0	75	21 49½			
	13 47 0	4 7 1	24 15,8	76	Do.	199 51 10	4	
♀ —— 12.		Noon.	64 30,6		21 49½	Dollond.		
			64 30,5	77	21 49 6/10	R. 1.		
			64 31,0		21 49 1/10	R. 2.		
♄ —— 13.	14 15 47	4 36 37	17 55,2	76	21 49½	199 50 10	6	
☉ —— 14.	14 7 45	4 29 2	19 47,8	76	21 49⅓	199 50 40	6	
☽ —— 15.		Noon.	65 43,8	75	21 47¼			
	14 41 52	5 2 29	12 20,0	74	21 46	199 33 13	4	At sea.
	4 58 7	19 17 33	17 3,2	73	21 34	199 12 8	4	
♂ —— 16.		Noon.	66 27,5	75	21 15½			
	14 38 55	4 55 39	14 6,9	74	21 22	198 28 34	4	
☿ —— 17.	14 47 33	4 57 39	13 49,9	75	21 15	196 42 22	4	
♃ —— 18.		Noon.	67 30,5	75	21 12			
	14 43 35	4 47 53	16 14,5	75	21 11	195 8 27	4	
	5 32 18	19 34 3	21 22,7	74	21 10	194 33 8	3	
♀ —— 19.		Noon.	67 56,5	74	21 9½			
	14 49 7	4 49 44	15 57,7	75	21 8	194 7 34	4	
♄ —— 20.		Noon.	68 37,5	75½	20 52¼			
	14 43 38	4 41 28	17 56,0	75	20 49⅓	193 19 44	4	
	6 1 6	19 56 9	26 51,0	75	20 40½	192 48 40	4	
☉ —— 21.		Noon.	69 16,0	75	20 37¾			
	14 59 49	4 52 42	15 37,4	77½	20 34	191 58 50	4	
	5 41 21	19 31 42	21 23,1	76	20 32½	191 16 10	4	
☽ —— 22.		Noon.	69 49,2	76	20 29½			
	15 13 27	5 1 25	13 45,6	79	20 26	190 37 10	4	
♂ —— 23.		Noon.	70 42,7	76	19 58½			
	14 59 11	4 37 42	19 28,1	76	19 58½	188 6 39	4	
	5 54 26	19 27 47	20 51,2	76	19 57	186 47 1	4	
☿ —— 24.		Noon.	71 8,5	76	19 56⅓			
	6 21 43	19 47 0	25 24,6	77½	19 57	184 38 55	4	
♃ —— 25.		Noon.	71 31,0	77½	19 57¼			
	15 20 36	4 44 40	18 8,5	79½	21 45	184 18 3	4	

1779.	Time per Watch N° 1.	Apparent Time.	Altitude of the ☉'s L. L.	Therm.	Latitude in.	Longitude by Watch N° 1.	N° of Observations.	Remarks.
	H. ′ ″	H. ′ ″	° ′		° ′	° ′ ″		
♀ March 26.		Noon.	72 4,0	79½	19 48½ N	E		
	15 40 6	5 0 18	14 37,4	80	19 48⅔	183 18 10	4	
	6 1 9	19 20 4	19 14,2	80	19 48	182 49 24	4	
♄ —— 27.		Noon.	72 27,5	78	19 48½			
	15 32 32	4 49 46	17 17,0	80	19 52	182 21 22	4	
☉ —— 28.		Noon.	72 33,5	81	20 50¾			
☽ —— 29.		Noon.	72 47,5	84	20 15⅓			
♂ —— 30.		Noon.	73 6,2	81	20 21			
	15 17 35	4 28 40	22 33,5	81	20 23	180 28 45	4	
	6 23 7	19 33 45	23 9,0	80	20 30	180 16 45	4	
☿ —— 31.		Noon.	73 14,5	81	20 35			
	15 22 32	4 33 11	21 34,2	83	20 39	180 9 15	4	
♃ April 1.		Noon.	72 58,3	81	21 14			
	15 11 18	4 19 30	24 50,2	79	21 24	179 30 44	4	
♀ —— 2.		Noon.	71 59,5	78	22 36			
	6 9 34	19 4 44	16 40,7	75½	24 12	176 3 0	4	
♄ —— 3.		Noon.	70 20,5	74	24 38¾			
	7 28 52	20 17 22	32 58,7	75½	26 3	174 15 50	4	
☿ —— 7.		Noon.	66 22,5	75	30 6¾			
	15 52 53	4 18 53	25 2,1	64½	30 10	168 16 3	4	
♃ —— 8.		Noon.	66 14,5	62	30 39			
	17 1 44	5 23 43	11 18,6	62	30 54	167 8 33	4	
	6 14 32	18 35 17	11 15,8	61	31 51	166 47 1	4	
♀ —— 9.		Noon.	64 59,0	66¾	32 16			
	16 21 29	4 41 58	20 16,2	68½	32 38	166 39 46	4	
♃ —— 15.		Noon.	57 38,7	66½	41 52			
	8 39 42	20 37 28	35 12,3	56½	42 10	160 16 10	8	
♀ —— 16.		Noon.	57 39,0	44	42 12¾			
	8 2 28	19 59 51	28 36,1	51	42 59	160 4 31	4	
♄ —— 17.		Noon.	56 52,5	48	43 18½			
	16 43 34	4 41 33	21 10,2	51	43 48	160 11 30	4	
☉ —— 18.		Noon.	54 22,5	50	46 9			
	8 51 23	20 54 41	36 14,0	49½	48 18	161 21 24	4	
♂ —— 20.		Noon.	51 25,5	47	49 47¾			
	16 44 36	4 50 32	19 45,2	47¾	49 56	161 53 34	4	
	7 35 7	19 43 54	25 11,7	42½	50 15	162 31 31	4	
☿ —— 21.		Noon.	51 8,7	42	50 25¾			
	17 2 59	5 10 0	16 52,4	52½	50 40	162 3 36	4	
☽ —— 26.	The Watch N° 1. stopped, and was not used during the remaining part of the voyage.							
♀ —— 30.		Noon.	51 29,7	38	52 57¾	In the Bay of Awatchaia, or Saint Peter and Paul at Kamtschatka.		

*** The remainder of the Noon Observations are with the Lunar Observations.

OBSERVATIONS

OF THE

MOON'S Diſtance from the SUN and FIXED STARS,

FOR

DETERMINING THE LONGITUDE AT SEA,

Made on Board His MAJESTY'S SLOOP RESOLUTION,

IN HER LATE VOYAGE ON DISCOVERIES,

IN THE YEARS 1776, 77, 78, 79, 80,

BY CAPTAIN COOKE AND THE OFFICERS
OF THE SHIP.

1776.	Time per Watch N° 1.	Altitude of the ☉'s L. L. or ✱.	Moon's Altitude.	Distance of ☽'s Limb from the ☉'s, or ✱.	Latitude of the Ship.	Longitude West of Greenwich.	Therm.	N° of Obs.	Observers.	Sextant used.	Objects.
	H. ′ ″	° ′	° ′	° ′ ″	° ′	° ′ ″	°				
♀ July 19.	5 41 40	23 13½	43 19½ U	45 14 30	47 42 N	7 21 49 W	64	6	C.		☽ à ☉.
	5 51 59	21 27⅓	41 57	45 18 37	47 40	7 19 30		6	K.		Do.
♄ — 20.	4 14 53	38 19⅔	49 41	55 48 30	46 11	8 22 20	64	6	C.		Do.
	4 14 53	38 19⅔	49 41	55 46 39	46 4	7 39 15		6	K.		Do.
	4 59 52	30 28½	48 10½	56 1 31	45 54	7 46 45		6	C.		Do.
	4 59 52	30 28½	48 10½	56 1 50		8 0 0	66	6	K.		Do.
☉ — 21.	5 10 59	28 7	45 15½ L	67 3 19	45 24	7 42 30	67	4	C.		Do.
	5 33 56	24 33	44 43	67 12 12		7 18 45	65	6	C.		Do.
	5 33 56	24 33	44 43	67 10 45		8 3 30		6	K.		Do.
☽ — 22.	4 15 30	38 37½	39 4¼	77 49 14	44 5	8 12 45	65	6	K.	R. 1	Do.
	4 22 50	37 16½	39 44½	77 49 49		8 28 30		6	K.	R. 2	Do.
	4 40 55	34 2	40 55	77 57 23		8 20 0	69	10	C.	B.	Do.
	5 2 23	30 30	42 26	78 2 22		8 19 30		4	C.	R. 1	Do.
	5 22 39	24 51	43 8⅓	78 14 6		8 15 30		5	M.	R. 2	Do.
♂ — 23.	4 48 4	32 55⅓	34 48½	89 7 38	43 48	7 57 0	70	6	K.	D.	Do.
	5 7 15	29 16⅓	36 13	89 14 21	43 50	8 34 15	70	6	C.	R. 4	Do.
	5 7 15	29 16⅓	36 13	89 14 57		8 27 0		6	K.	B.	Do.
	5 30 43	25 4	37 34½	89 22 15		8 27 0		6	M.	R. 2	Do.
♃ — 24.	6 35 48	14 0	34 32	101 6 19	43 12	9 54 45	68	7	C.	B.	Do.
	6 35 48	14 0	34 32	101 6 19		9 47 0		7	K.	R. 1	Do.
	6 43 7	12 43	34 48½	101 8 47		10 16 45		6	C.	R. 1	Do.
	6 43 7	12 43	34 48½	101 9 15		10 3 0		6	K.	B.	Do.
♃ Aug. 1.	13 2 52	21 12	40 14	56 11 1	28 30½	16 55 50	70	6	M.		☽ à α Arietis.
	14 7 6	35 0	47 20½	56 28 25		16 12 30		6	K.		Do.
♀ — 2.	12 36 48	15 37	30 9⅔	43 2 2	28 30	16 19 30	71	6	K.	R. 1	Do.
♄ — 3.	17 26 28	45 41	59 52	55 37 5	28 30½	16 48 45	71	6	K.	R. 1	☽ à Aldebaran.
	17 41 4	48 58	58 25	55 31 44		16 43 15		6	K.	D.	Do.

These last five sets were observed when at anchor in Santa Crux road, at the Island of Teneriff.

☽ — 5.	21 3 25	31 19	54 46½ U	92 56 16	24 46 N	17 54 15 W	75	4	K.	R. 1	☽ à ☉.
	21 35 32	38 26¾	48 38½	92 45 23		18 15 30	76	6	K.	R. 1	Do.
	21 35 32	38 26¾	48 38½	92 44 6		18 27 45		6	C.	B.	Do.
	21 43 37	40 9	46 44	92 42 0		18 18 0		4	K.	R. 2	Do.
♂ — 6.	23 23 34	62 20	37 57⅓	79 11 49	22 43	19 29 30	76½	6	K.	D.	Do.
	23 41 20	66 26	33 54½	79 4 41		19 29 45		6	C.	B.	Do.
	23 41 20	66 26	33 54	79 5 13		19 17 30		4	K.	R. 1	Do.
	23 45 12	67 24	32 59	79 2 40		19 21 0		6	C.	R. 1	Do.
	23 45 12	67 24	32 59	79 3 15		19 53 15		5	K.	B.	Do.
	0 10 31	72 56	27 32⅔	78 52 50		19 38 45		6	C.	D.	Do.
	0 10 31	72 56	27 32⅔	78 54 2		18 58 45		6	M.	R. 2	Do.
	0 28 1	76 38	23 29	78 44 10		19 44 0		4	K.	D.	Do.
♃ — 8.	23 8 33	57 34½	67 37½	54 38 2	19 46	20 1 30	75½	6	K.	R. 1	Do.
	23 20 55	60 14	65 3	54 25 53		20 8 0		6	M.	R. 2	Do.

In the column of Moon's Altitudes U indicates the upper limb was observed, L that of her lower limb.

In the column under observers, C. stands for Captain Cooke; K. for Lieutenant King, W. for Lieutenant Williamson; B. for Bligh, the Master; R. for Roberts, M. for Mackie, T. for Trevenen, Mo. for Monat, G. for Gilbert, V. for Vancouver, P. for Paul, and Ta. for Taylor, Midshipmen.

After the 14th of February 1779, C. stands for Captain Clerke.

Under Sextants, B. stands for Bird, D. for Dollond, R. for Ramsden; and the numbers 1, 2, 3, &c. for the different Sextants by the same makers.

1776.	Time per Watch N° 1.	Altitude of the ☉'s L. L or ✱.	Moon's Altitude.	Distance of the ☽'s Limb from the ☉'s, or ✱.	Latitude of the Ship.	Longitude West of Greenwich.	Therm.	N° of Obs.	Observers.	Sextant used.	Objects.
	H. ′ ″	° ′	° ′	° ′ ″	° ′	° ′ ″	°				
☽ Aug. 19.	3 6 10	65 48½	54 34½ U	59 1 4	8 47 N	21 27 45 W	79¾	12	C.	B.	☽ à ☉.
	3 42 3	57 5	62 18	59 12 0		22 22 15	80	3	K.	R. 1	Do.
	3 42 3	57 5⅔	62 18	59 11 46		22 14 45		3	M.	R. 2	Do.
	3 53 51	54 10⅓	64 48	59 15 7		22 23 30		5	K.	R. 1	Do.
	3 53 51	54 10⅓	64 48	59 13 57		22 22 45		5	M.	R. 2	Do.
	9 9 34	50 8	31 24 L	39 36 45	8 44	21 18 0	78	4	K.	R. 1	☽ à Antares.
	9 50 48	44 11	21 29⅔	39 20 32		21 23 22	77		C.	B.	Do.
	When the above distances of Antares were observed the Horizon was very bad.										
☿ —— 21.	10 15 34	80 19¾	32 56½ L	66 33 42	6 54	19 30 30	78¾	8	C.	B.	☽ à α Aquilæ.
	10 15 34	80 19¾	32 56½	66 33 42		19 9 0		8	K.	D.	Do.
	10 56 56	83 17	23 27	66 21 25		18 48 30			M.	R. 2	Do.
♃ —— 22.	3 10 28	62 41	23 34⅔ U	93 1 49	6 30	19 55 19	82½	6	C.	B.	☽ à ☉.
	3 24 8	59 19	26 43	93 9 25		20 55 15		6	C.	R. 1	Do.
	3 39 36	56 10½	30 10⅔	93 16 2		21 0 0		6	K.	R. 1	Do.
	3 39 36	56 10½	30 10⅔	93 15 45		20 10 0		6	B.	R. 3	Do.
	3 50 51	52 50½	32 35¾	93 18 53		20 49 0		6	K.	B.	Do.
	4 5 14	49 35⅓	35 48	93 23 35		20 24 30		6	K.	D.	Do.
	4 45 19	41 20	44 27	93 36 30		19 25 15	81½	6	C.	D.	Do.
	4 45 19	41 20	44 27	93 38 37		20 46 45		6	M.	R. 2	Do.
	5 5 59	34 37	48 33½	93 93 35	6 30	19 56 45	79	2	C.	B.	Do.
	5 5 59	34 37	48 33½	93 43 0		20 28 10		2	M.	R. 3	Do.
	9 41 23	71 55	50 1⅓ L	56 11 30	6 20	19 32 45	77½	6	C.	B.	☽ à α Aquilæ.
	9 41 23	71 55	50 1⅓	56 12 5		19 20 45		6	K.	R. 1	Do.
	9 53 44	75 25	47 8	56 9 10		18 50 30		6	C.	R. 1	Do.
	9 53 44	75 25	47 8	56 8 3		20 14 0		6	K.	D.	Do.
	10 3 39	77 32½	45 38	56 5 43		19 33 15		4	C.	D.	Do.
	10 3 39	77 32½	45 38	56 6 12		19 19 15		4	K.	R. 1	Do.
♀ —— 23.	4 55 10	36 31¾	35 19 U	105 37 23	5 54	19 52 45	80	5	C.	B.	☽ à ☉.
	4 55 10	36 31¾	35 19	105 38 53		20 37 45		5	K.	R.	Bad Observation.
	6 1 33	19 57⅔	48 54	106 1 40		21 30 0		6	M.	R. 2	Do.
	6 1 33	19 57⅔	48 54	106 0 17		20 52 15		6	B.	R. 3	Do.
	6 12 58	17 7⅓	51 7⅓	106 3 55		21 7 15		6	M.	R. 3	Do.
	6 12 58	17 7⅓	51 7⅓	106 3 57		20 38 30		6	K.	D.	Do.
	8 42 14	22 35	64 30 L	57 43 50		20 47 12	76	3	M	R. 2	☽ à Spica.
	8 42 14	22 35	64 30	57 43 52		20 47 15		3	K.	R. 1	Do.
	9 2 14	17 51	62 58¾	57 56 20		19 40 0		4	C.	B.	Do.
	9 2 14	17 51	62 58¾	57 47 13		19 52 30		4	K.	D.	Do.
	9 29 30	11 8½	59 39	57 54 18		20 4 30	75	8	C.	D.	Do.
	9 29 30	11 8½	59 39	57 54 38		20 13 15		8	K.	R.	Do.
☉ —— 25.	9 28 16	45 38⅔	62 8	39 39 5		21 0 45	76	5	K.	R. 1	☽ à Antares.
	9 36 52	44 12	62 52	39 42 14	5 2	21 7 22		5	C.	D.	Do.
	9 36 52	44 12	62 52	39 39 40		20 9 7		5	K.	B.	Do.
	9 45 48	42 37	63 30¼	39 43 16		20 7 7		4	C.	B.	Do.
	9 45 48	42 37	63 30¼	39 44 30		20 54 22		4	K.	D.	Do.
☽ —— 26.	8 14 24	57 4	40 37½	53 21 45	4 2	21 57 15	78	7	C.	B.	Do.
	8 14 24	57 4	40 37	53 22 18		22 10 0		7	K.	R. 1	Do.
	8 25 31	55 57⅓	42 52⅓	53 25 48		22 2 0		6	C.	R. 1	Do.
	8 25 31	55 57⅓	42 52⅓	53 24 55		21 36 0		6	K.	B.	Do.
	9 5 45	50 9¼	51 5¼	53 38 7		22 0 15		4	C.	R. 3	Do.
	9 5 45	50 9¼	51 5¼	53 38 25		22 6 30		4	K.	R. 2	Do.
	9 59 29	40 20⅓	60 12	54 0 30		22 7 30		6	M.	R. 2	Do.

1776.	Time per Watch.	Altitude of the ☉'s L. L. or ✳.	Moon's Altitude.	Distance of the ☽'s Limb from the ☉'s, or ✳.	Latitude of the Ship.	Longitude West of Greenwich.	Therm.	No of Obs.	Observers.	Sextant used.	Objects.
	H. ′ ″	° ′	° ′	° ′ ″	° ′	° ′ ″					
☽ Aug. 26.	11 22 30	52 23⅔	66 27 L	52 6 15	4 0 N	21 51 15 W	72	7	C.	B.	☽ à Pegasi.
	11 45 46	57 43⅓	64 52	51 59 9		21 28 45		6	C.	D.	Do.
♀ —— 30.	14 57 38	25 43⅓	82 11	71 11 11	2 4	25 48 15	73	7	K.	R. 1	☽ à α Aquilæ.
	15 18 34	20 32¾	84 56	71 18 10		24 55 0		5	K.	D.	Do.
	13 43 17	34 4¼	82 21¼	62 5 5		24 21 15		6	K.	D.	☽ à Aldebaran.
	16 5 5	39 15⅔	78 12	61 54 30		25 16 30		6	K.	R. 1	Do.
♄ —— 31.	11 51 38	71 12	24 7¼	83 19 42	0 51	27 13 30	75	4	C.	B.	☽ à α Aquilæ.
	11 51 38	71 12	24 7¼	83 20 44		27 40 30		4	M.	R. 2	Do.
	17 5 40	52 9⅔	79 24⅞ U	46 18 20	0 40	26 40 45	75	6	K.	R. 1	☽ à Aldebaran.
	17 5 40	52 9⅔	79 24⅛	46 19 16		26 44 45		6	M.	R. 2	Do.
	17 36 51	17 46	71 27¾	86 40 47	0 14 N	26 58 45	76	4	K.	R. 1	☽ à Jupiter.
☉ Sept. 1.	15 52 1	34 50½	65 49¾ L	31 51 25	0 13 S	28 15 30	75½	4	M.	R. 2	☽ à Aldebaran.
	17 35 6	57 59½	80 8	31 13 33		28 15 16		4	K.	R. 1	Do.
	17 49 41	16 11	78 20⅓ U	75 25 54		28 47 15		5	K.	R. 1	☽ à Pollux.
	18 43 8	16 53	67 41¼	72 36 12		28 55 30		5	K.	D.	☽ à Jupiter.
	21 35 35	25 50¼	27 19½	57 2 9		28 33 0		5	K.	D.	☽ à ☉, Back obs.
☽ —— 2.	14 45 31	28 18¾	36 26 L	110 3 7	1 50	30 15 0	76	4	K.	R. 1	☽ à α Aquilæ.
	15 2 59	22 40⅔	40 6	12 2 20		30 10 0		6	K.	R. 1	☽ à Aldebaran.
	17 41 28	17 24⅓	71 35⅓	58 38 18		29 37 0		5	K.	R. 1	☽ à Jupiter.
	23 4 12	45 15	30 51⅓ U	96 17 20	4 26	29 26 45	80½	6	C.	B.	☽ à Sun.
	23 4 12	45 15	30 51⅓	96 18 27		29 58 30		6	K.	R. 1	Do.
	23 4 12	45 15	30 51⅓	96 18 30		29 57 0		6	M.	R. 2	Do.
	23 14 41	47 49½	28 27¾	96 14 49		29 34 0		5	C.	R. 1	Do.
	23 14 41	47 49½	28 27¾	96 13 20		30 16 45		5	K.	B.	Do.
	23 14 41	47 49½	28 27¾	96 14 14		29 50 30		5	M.	D.	Do.
	23 21 44	49 30	26 53	96 11 20		30 5 30		3	C.	D.	Do.
	23 21 44	49 30	26 53	96 12 35		29 29 0		3	K.	R. 2	Do.
	23 21 44	49 30	26 53	96 10 43		30 22 15		3	M.	B.	Do.
♂ —— 4.	23 45 17	53 28⅓	33 34⅓	83 34 29	5 35	32 57 30		10	C.	R. 1	Do.
	23 45 17	53 28⅓	33 34⅓	83 35 3		32 40 45	78	10	K.	R. 5	Do.
	0 12 30	60 1¼	27 27⅓	83 25 8		32 42 0		6	C.	D.	Do.
	0 12 30	60 1¼	27 27⅓	83 26 0		32 1 30		6	K.	R. 1	Do.
	0 19 10	61 19	26 11	83 24 20		31 50 0		6	C.	R. 1	Do.
	0 19 10	61 19	26 11	83 22 10		32 53 45		6	K.	D.	Do.
♃ —— 5.	17 38 19	59 34½	31 33⅓ L	57 17 0	6 0	32 44 45	78	5	K.	R. 1	☽ à α Arietis.
	0 6 33	56 6	49 20	59 40 15	7 54	33 33 30	77	7	C.	B.	☽ à Sun.
	0 6 33	56 6	49 20	59 39 55		33 38 0		7	K.	R. 1	Do.
	0 15 7	58 2	47 48⅔	59 37 57		33 22 45		6	C.	R. 1	Do.
	0 15 7	58 2	47 48⅔	59 38 5		33 21 15		6	K.	B.	Do.
♀ —— 6.	0 6 33	56 6	49 20	59 40 15	7 54	33 33 30	77	7	C.	B.	Do.
	0 6 33	56 6	49 20	59 39 55		33 38 0		7	K.	R. 1	Do.
	0 15 7	58 2	47 48⅔	59 37 57		33 22 45		6	C.	R. 1	Do.
	0 15 7	58 2	47 48⅔	59 38 5		33 21 15		6	K.	B.	Do.
	0 24 32	60 12	46 11	59 33 37		34 16 0		6	C.	D.	Do.
	0 24 32	60 12	46 11	59 33 30		34 14 0		6	K.	R. 5	Do.
☽ —— 16.	5 20 30	38 52¼	76 14	41 17 20	20 43	36 36 45	74	6	K.	R. 1	Do.
	5 49 44	32 19½	72 15½	41 24 0		36 20 0		2	K.	R. 1	Do.
	9 32 17	52 40¾	23 14½	31 7 45		35 4 15		6	C.	D.	Do.
	9 32 17	52 40¾	23 14½	31 7 2		35 29 30		6	K.	R. 1	Do.
	9 43 24	50 8	20 19½	31 2 20		35 29 30		6	C.	R. 1	Do.
	9 43 24	50 8	20 19½	51 3 27		34 58 0		6	K.	D.	Do.
♂ —— 17.	2 59 13	63 26	51 31 U	51 48 43	21 57	35 55 0		6	C	R. 1	Do.

1776.	Time per Watch.	Altitude of the ☉'s L. L. or ✳.	Moon's Altitude.	Distance of the ☽'s Limb from the ☉'s or ✳.	Latitude of the Ship.	Longitude West of Greenwich.	Therm.	No of Obs.	Observer.	Sextant used.	Objects.
	H. ′ ″	° ′	° ′	° ′ ″	° ′	° ′ ″	°				
♂ Sept. 17.	2 59 13	63 26	51 31 U	51 49 2	21 57 S	36 2 45 W	74	6	K.	D.	☽ à Sun.
	3 9 33	62 15¾	53 49¾	51 52 15		35 44 0		6	C	D.	Do.
	3 9 33	62 15¾	53 49¾	51 51 55		35 33 15		6	K.	R. 1	Do.
	3 40 17	57 49⅓	60 44¾	52 0 47		35 36 0		5	C.	R. 5	Do.
	3 40 17	57 49⅓	60 44¾	51 59 15		35 48 15		5	K.	R. 2	Do.
☿ ——18.	4 8 38	51 39¾	57 58⅖	63 29 5	23 42½	35 38 45	70½	6	C.	D.	Do.
	4 8 38	51 39¾	57 58⅖	63 29 33		35 53 15		6	K.	R. 1	Do.
	4 8 38	51 39¾	57 58⅖	63 29 22		35 47 45		6	M.	R. 2	Do.
	4 17 44	49 57⅖	60 0	63 32 23		35 58 30		6	C.	R. 1	Do.
	4 17 44	49 57⅖	60 0	63 32 30		36 2 0		6	M.	R. 2	Do.
♃ ——19.	2 42 36	61 52½	29 36⅔	74 29 19		33 55 22	72½	4	C.	B.	Do.
	2 42 36	61 52½	29 36⅔	74 29 26		33 57 40		4	K.	R. 1	Do.
	2 42 36	61 52½	29 36⅔	74 30 30		34 24 0		4	M.	R. 3	Do.
	2 53 6	61 0¼	31 53¾	74 34 28		34 21 15		5	C.	R. 1	Do.
	2 53 6	61 0¾	31 53¾	73 33 37		33 59 45		5	K.	B.	Do.
	2 53 6	61 0¾	31 53¾	74 34 40		34 26 49		5	M.	R. 3	Do.
	3 11 31	59 4⅓	35 57½	74 41 24		34 16 45		5	C.	D.	Do.
	3 11 31	59 4⅓	35 57½	74 41 10		34 9 20		5	K.	R. 3	Do.
	3 11 31	59 4⅓	35 57½	74 42 12		34 52 30		5	M.	R. 1	Do.
	3 17 49	58 17⅓	37 21⅔	74 43 16		34 22 10		5	C.	R. 3	Do.
	3 17 49	58 17⅓	37 21⅔	74 44 33		34 52 0		5	K.	D.	Do.
	3 17 49	58 17⅓	37 21⅔	74 44 6		34 39 0		5	M.	M.	Do.
	3 38 51	55 18⅔	41 57	74 51 29		34 21 30		6	C.	R. 5	Do.
	3 38 51	55 18⅔	41 57	74 51 25		34 19 30		6	K.	R. 2	Do.
♀ ——20.	4 21 21	46 35	41 57½	86 58 40	27 1½	33 9 45	71	6	K.	R. 1	Do.
	4 21 21	46 35	41 57½	86 58 10		33 26 15		6	M.	R. 2	Do.
	4 21 21	46 35	41 57½	86 59 45		34 1 15		6	W.	R. 3	Do.
	4 33 23	44 20	44 31½	87 3 15		33 27 45		6	K.	D.	Do.
	4 33 23	44 20	44 31½	87 2 25		33 14 15		6	M.	R. 1	Do.
	4 48 28	41 22	47 46	87 8 2½		33 53 30		6	K.	R. 3	Do.
	4 48 28	41 22	47 46	87 8 49		33 27 15		6	M.	D.	Do.
	5 8 44	37 9¾	52 10¾	87 15 10		33 52 45		6	K.	R. 2	Do.
	5 8 44	37 9¾	52 10¾	87 16 2		33 50 0		6	H.	R. 1	Do.
	5 29 30	32 57⅓	56 43⅓	87 21 2		33 13 30		6	C.	D.	Do.
	5 59 54	26 29	63 12⅔	87 31 23		34 10 45		6	C.	B.	Do.
	5 59 54	26 29	63 12⅔	87 29 42		33 20 30		6	K.	R. 5	Do.
	6 16 1	23 7½	66 32½	87 36 30	27 11	33 49 45	70	6	C.	R. 1	Do.
	6 16 1	23 7½	66 32½	87 35 40		33 24 0		6	K.	R. 5	Do.
	9 47 38	44 48⅓	64 22⅓ L	22 4 4		32 55 0	69½	5	C.	B.	☽ à Antares.
	9 47 38	44 48⅓	64 22⅓	22 4 58		33 19 30		5	K.	R. 1	Do.
	9 47 38	44 48⅓	64 22⅓	22 5 54		33 39 54		5	W.	R. 3	Do.
	9 47 38	44 48⅓	64 22⅓	22 4 31		33 7 15		5	M.	R. 2	Do.
	9 57 11	42 44⅔	61 56	22 7 46		33 15 30	69	5	C.	R.	Do.
	9 57 11	42 44⅔	61 56	22 6 34		32 47 30		5	C.	B.	Do.
	9 57 11	42 44⅔	61 56	22 7 31		33 9 23		5	W.	R. 2	Do.
	9 57 11	42 44⅔	61 56	22 7 12		33 1 30		5	M.	R. 3	Do.
	10 23 33	37 10¼	56 17¼	22 16 3		32 57 45		4	C.	R. 5	Do.
	10 23 33	37 10¼	56 17¼	22 17 27		33 32 27		4	K.	D.	Do.
	10 23 33	37 10¼	56 17¼	22 16 21		33 5 52		4	M.	R. 1	Do.
♄ ——21.	5 41 31	29 17⅕	49 14 U	99 41 58	27 51¾	32 8 0	70¾	5	C.	R. 1	☽ à Sun.
	5 41 31	29 17⅕	49 14	99 43 15		32 41 0		5	K.	B.	Do.
	5 41 31	29 17⅕	49 14	99 43 7		32 40 0		5	M.	R. 3	Do.

1776.	Time per Watch. H. ′ ″	Altitude of the ☉'s L. L. or ✱. ° ′	Moon's Altitude. ° ′	Distance of ☽'s Limb from the ☉'s or a ✱. ° ′ ″	Latitude of the Ship. ° ′	Longitude West of Greenwich. ° ′ ″	Therm. °	N° of Obs.	Observers.	Sextant used.	Objects.
♄ Sept. 21.	5 47 49	27 56 2/3	50 29 3/4 U	99 45 5	27 51 3/4 S	32 36 0 W	70 3/4	6	C	R. 1	☽ à Sun.
	5 47 49	27 56 2/3	50 29 3/4	99 43 42		31 55 45		6	K.	B.	Do.
	5 47 49	27 56 2/3	50 29 3/4	99 44 48		32 26 0		6	M.	R. 3	Do.
	6 5 46	24 8 1/5	54 23 1/2	99 49 39		31 59 15		6	C.	D.	Do.
	6 5 46	24 8 1/5	54 23 1/2	99 50 55		32 32 0		6	K.	R. 2	Do.
	6 5 46	24 8 1/5	54 23 1/2	99 51 2		32 35 45		6	M.	R.	Do.
	6 13 36	22 16 3/4	36 4 3/4	99 53 2		32 19 30		6	C.	R. 2	Do.
	6 13 36	22 16 3/4	36 4 3/4	99 52 9		31 54 30		6	K.	D. 1	Do.
	6 13 36	22 16 1/2	36 4 3/4	99 54 15		31 58 30		6	M.	D. 2	Do.
	6 28 51	19 6 1/2	59 40 1/4	99 58 25	27 58	32 40 0	70 1/2	6	C.	R. 5	Do.
	6 28 51	19 6 1/2	59 40 1/4	99 59 2		32 51 15		6	K.	R. 6	Do.
☉ —— 22.	5 47 9	27 8	39 5	112 24 42		30 58 0	69 3/4	5	C.	D.	Do.
	5 47 9	27 8	39 5	112 25 27		31 19 30		5	K.	R. 1	Do.
	5 47 9	27 8	39 5	112 25 37		31 23 10		5	M.	R. 2	Do.
	5 53 59	25 42	40 37	112 28 44		31 33 30		6	C.	R. 1	Do.
	5 53 59	25 42	40 37	112 27 25		30 56 30		6	K.	D.	Do.
	5 53 59	25 42	40 37	112 28 30		31 27 30		6	M.	D. 2	Do.
	6 11 12	22 1 1/4	44 21 1/3	112 35 0		31 27 30	69 1/2	6	C.	B.	Do.
	6 11 12	22 1 1/4	44 21 1/3	112 34 54		31 25 0		6	K.	R. 3	Do.
	6 11 12	22 1 1/4	44 21 1/3	112 35 19		31 36 0		6	M.	R. 1	Do.
	6 11 12	22 1 1/4	44 21 1/3	112 35 30		31 40 0		6	W.	R. 2	Do.
	10 44 24	38 29 2/3	73 0 1/5 L	57 19 52		30 44 30	67 3/4	10	C.	B.	☽ à α Pegasi.
	10 44 24	38 29 2/3	73 0 1/5	57 21 33		30 1 0		10	K.	R. 1	Do.
	11 4 26	40 59 1/2	68 44	57 13 36		30 23 30		10	C.	R. 1	Do.
	11 4 26	40 59 1/2	68 44	57 14 6		30 30 30		10	K.	D.	Do.
☽ —— 23.	6 33 21	16 44 1/2	37 35 1/2 U	54 12 57	29 22	28 30 0	70	6	K.	D.	☽ à ☉ B. obs.
	9 45 0	39 40	75 51 1/4	62 9 2	29 29	29 11 0	68 1/2	8	C.	B.	☽ à Antares.
	9 45 0	39 40	75 51 1/4	62 9 24		29 21 0		8	K.	R. 1	Do.
	9 45 0	39 40	75 51 1/4	62 8 18		29 25 30		8	M.	R. 2	Do.
	10 2 53	33 21 1/6	77 51 1/2	45 10 24		29 40 30		8	C.	B.	☽ à α Pegasi.
	10 2 53	33 21 1/6	77 51 1/2	45 10 44		29 29 45		8	K.	R. 1	Do.
	10 16 33	35 29	78 56 1/3	45 6 55		29 19 30		8	C.	R. 1	Do.
	10 16 33	35 29	78 56 1/3	45 6 41		29 27 0		8	K.	B.	Do.
	10 27 3	30 38 2/3	79 22 1/2	62 26 4		29 49 30		6	C.	R. 1	☽ à Antares.
	10 27 3	30 38 2/3	79 22 1/2	62 25 37	30 16 1/3	29 38 0		6	K.	B.	Do.
♂ —— 24.	6 4 49	20 15 1/4	20 1 1/2	40 50 52	30 22	26 46 25	70	6	C.	D.	☽ à Sun.
	6 22 25	16 33 1/6	23 35 1/3	40 24 37		26 31 30		6	M.	D.	Do.
♄ —— 28.	17 53 33	38 21 1/6	25 22 1/2 L	37 33 21		16 30 30	59	5	K.	R. 1	☽ à Aldebar.
♂ Oct. 1.	14 33 18	32 27 1/2	29 26	39 3 37	34 16	10 29 15	55 1/2	2	M.	R. 1	☽ à α Arietis.
♃ —— 3.	17 39 54	28 24 2/3	34 22 1/3	40 18 27		9 51 45	54	6	K.	R. 1	☽ à Jupiter.
	16 50 35	36 59 1/6	28 59 1/6	32 31 6		9 53 45 n		5	M.	R. 1	☽ à Aldebar.
	17 6 9	10 30 1/3	30 3 1/5	47 38 31	34 43	9 35 30	53 1/2	5	M.	R. 1	☽ à Regulus.
	19 44 44	22 0	29 29 3/4	91 23 27		8 30 0	62	10	C.	B.	☽ à Sun.
	19 44 44	22 0	29 29 3/4	91 22 39		8 56 45		10	M.	R. 1	Do.
	19 53 4	23 42 3/4	28 51 2/3	91 20 46		8 23 45		6	C.	R. 1	Do.
	19 53 4	23 42 3/4	28 51 2/3	91 20 52		8 20 30		6	M.	B.	Do.
	20 32 27	28 56	25 2 3/4	91 6 17	35 43	9 30 0		6	C.	D.	Do.
	20 32 27	28 56	25 2 3/4	91 6 29		9 26 30		6	K.	R. 1	Do.
	21 11 8	36 19 1/3	20 15 1/3	90 54 10		8 43 0		6	B.	R. 2	Do.
	21 11 8	36 19 1/3	20 15 1/3	90 55 57		8 15 0		6	K.	B.	Do.
	21 26 20	39 6 1/12	18 20 1/10	90 47 45		9 27 0		10	C.		Do.
	21 26 20	39 6 1/12	18 20 1/10	90 47 40		9 30 0		10	K.	R. 1	Do.

1776.	Time per Watch	Altitude of the ☉'s L. L. or ✱.	Moon's Altitude.	Distance of ☽'s Limb from the ☉'s, or a ✱.	Latitude of the Ship.	Longitude West of Greenwich.	Therm.	N° of Obs.	Observers.	Sextant used.	Objects.
	H. ′ ″	° ′	° ′	° ′ ″	° ′	° ′ ″	°				
☽ Oct. 7.	17 3 6	21 39⅓	10 53¾ L	38 10 48	35 19 S	7 47 0 W	53	5	K	R. 1	☽ à Pollux.
	17 3 6	21 39⅓	10 53¾	38 10 48		7 47 0		5	M	D.	Do.
	17 12 12	22 30¼	12 25½	38 14 38		7 46 0		4	K	D.	Do.
	17 12 12	22 30¼	12 25½	38 14 48		7 50 0		4	M	R. 1	Do.
	17 22 38	28 54¾	14 19½	35 3 45		7 27 45		5	K	D.	☽ à Jupiter.
	17 22 38	28 54¾	14 19½	35 4 9		7 40 0		5	M	R. 1	Do.
	17 31 35	39 36	15 49	35 7 5		7 52 45		3	K	R. 1	Do.
	17 31 35	39 36⅔	15 49	35 7 47		8 14 0		3	M	D.	Do.
	20 27 18	30 33	38 17⅔	45 55 45	35 31	7 55 30	57	5	B	D.	☽ à Sun.
	20 27 18	30 33	38 17⅔	45 56 34		7 28 15		5	K	R. 1	Do.
	20 36 24	32 25⅓	38 51	45 54 13		7 8 45	56	5	K	D.	Do.
	20 36 24	32 25⅓	38 51	45 54 18		7 10 30		5	M	R. 1	Do.
	21 23 26	41 16¾	40 34⅔	45 41 10		7 13 30		5	C	B.	Do.
	21 23 26	41 16¾	40 34⅔	45 41 17		7 9 15		5	M	R. 2	Do.
	21 23 26	41 16¾	40 34⅔	45 40 57		7 21 0		5	W	R. 3	Do.
	21 56 6	46 56¾	40 11½	45 32 57		7 16 30	57	6	C	R. 1	Do.
	21 56 6	46 56¾	40 11½	45 32 37		7 0 45		6	K	B.	Do.
	21 56 6	46 56¾	40 11½	45 31 55		7 20 15		6	W	R. 3	Do.
	22 21 28	51 0½	39 5⅕	45 24 42		7 36 15	58	5	C	D.	Do.
	22 21 28	51 0½	39 5⅕	45 24 17		7 37 15		5	K	R. 5	Do.
	22 21 28	51 0½	39 5⅕	45 24 8		7 41 0		5	B	R. 2	Do.
	22 43 43	54 0½	37 40⅓	54 17 50		7 43 45		5	L	R. 2	Do.
☿ —— 16.	2 49 10	27 24	69 0	44 27 30	34 11	14 48 45 E		5		R.	Do.
♄ Dec. 14.	2 2 29	24 13	50 39	43 0 27	47 54	44 8 45	45¾	6	C	B.	Do.
	2 2 29	24 13	50 39	43 0 15		44 14 30		6	K	R. 1	Do.
	2 15 55	22 59⅓	48 49	43 5 30		44 15 37	43¾	6	C	R. 1	Do.
	2 15 55	22 59⅓	48 49	43 4 27		44 46 22		6	K	B.	Do.
	2 38 42	18 20¾	46 1	43 13 47		44 27 0		6	M	R. 2	Do.
☽ —— 30.	10 24 18	11 23½	28 31⅓	57 29 0	48 58	72 12 45	35½	8	K	R. 1	☽ à Jupiter.
	16 11 40	47 16⅙	10 11⅓ U	108 37 25		73 7 15		6	C	R.	☽ à Sun.
	16 11 40	47 16⅙	10 11⅓	108 35 35		72 4 0	42	6	K	R. 3	Do.
	16 17 48	48 10⅔	9 18⅓	108 35 22		73 10 30		6	C	R. 1	Do.
	16 17 48	48 10⅔	9 18⅓	108 33 52		72 13 30		6	K	R. 3	Do.
♂ —— 31.	16 5 19	49 9	18 12	97 48 42		77 35 0	45	6	C	R. 1	Do.
	16 5 19	49 9	18 12	97 56 40		76 28 0		6	B	R. 1	Do.
	16 16 46	50 52⅓	16 36	97 44 17		77 32 0		5	C	R. 1	Do.
1777.	16 16 46	50 52⅓	16 36	97 43 30		76 58 15		5	K	D.	Do.
♂ Jan. 14.	16 56 37	62 24⅙	30 46¼	59 53 0	47 19	116 18 45	47½	8	C	B.	Do.
	16 56 37	62 24⅙	30 46¼	59 54 15		115 51 15		8	K	R. 2	Do.
	17 3 45	62 1⅔	31 49⅔	57 57 12		115 57 10		6	C	R. 1	Do.
	17 3 45	62 1⅔	31 49⅔	57 57 44		115 42 30		6	K	B.	Do.
	17 3 45	62 1⅔	31 49⅔	59 57 40		115 44 30		6	B	R. 3	Do.
	17 9 14	61 39⅔	32 38	59 59 42		115 57 45		7	C	R. 2	Do.
	17 9 14	61 39⅔	32 38	60 0 25		115 40 45		7	K	R. 1	Do.
	17 9 14	61 39⅔	32 38	59 59 38		115 56 0		7	B	R. 3	Do.
	17 25 11	60 10⅔	34 46⅔	60 8 12		115 19 30		5	K	R. 3	Do.
	17 30 11	59 39	35 25⅔	60 8 55		115 58 30		6	K	R. 2	Do.
	17 35 51	58 59⅓	36 13¼	60 11 56		115 38 0		8	C	R. 3	Do.
	17 35 51	58 59⅓	36 13¼	60 11 18		116 5 30		8	K	D.	Do.
	18 9 55	54 0¼	40 58	60 28 39		115 39 30		20	C	D.	Do.
	19 6 12	46 16⅔	45 12⅙	60 49 10		115 39 45	50	6	K	D.	Do.
	19 24 53	43 17½	46 49	60 56 5		115 46 45		6	K	D.	Do.

1777.	Time per Watch N° 1.	Altitude of the ☉'s L. L. or ✳.	Moon's Altitude.	Distance of the ☽'s Limb from the ☉'s or ✳.	Latitude of the Ship.	Longitude East of Greenwich.	Therm.	N° of Obs.	Observers.	Sextant used.	Objects.
	H. ′ ″	° ′	° ′	° ′ ″	° ′	° ′ ″	°				
♀ Jan. 17.	19 20 32	36 18⅔	25 16 U	100 34 42	44 17¾ S	127 32 30 E	60	6	C	D.	☽ à Sun.
	19 20 32	36 18⅔	25 16	100 36 57		128 20 15		6	K	R. 1	Do.
	19 27 26	35 4½	26 4	100 40 17		128 0 0		6	C	R. 1	Do.
	19 35 23	33 39½	26 55½	67 22 42		128 4 45		6	K	D.	Do.
	19 57 40	29 33⅓	29 13⅓	100 52 46		128 1 15		10	C	B.	Do.
	19 57 40	29 33⅓	29 13⅓	100 53 32		127 41 45		10	M	R. 1	Do.
	19 57 40	29 33⅓	29 13⅓	100 53 20		127 40 0		10	K	R. 2	Do.
	20 8 34	27 35⅓	30 14⅔	100 57 23		127 54 45		10	C	R. 2	Do.
	20 8 34	27 35⅓	30 14⅔	100 57 37		127 49 45		10	K	B.	Do.
	20 8 34	27 35⅓	30 14⅔	100 57 24		127 53 45		10	R	R. 1	Do.
	20 34 15	22 57⅔	32 18	101 7 4		128 0 0		6	C	B.	Do.
	20 34 15	22 57⅔	32 18	101 7 57		127 48 30		6	K	R. 1	Do.
♄ —— 18.	18 42 52	40 35½	11 27	113 17 7	44 22⅔	131 11 30	57	6	K	R. 1	Do.
	18 42 52	40 35½	11 27	113 18 7		130 51 15		6	M	R. 2	Do.
	18 57 51	38 37⅔	12 57½	113 22 38		131 0 15		7	C	B.	Do.
	18 57 51	38 37⅔	12 57½	113 22 29		131 12 30		7	K	R. 1	Do.
	18 57 51	38 37⅔	12 57½	113 23 0		130 50 0		7	M	R. 2	Do.
	19 3 4	37 51⅓	13 37⅔	113 24 36		131 16 15		6	K	B.	Do.
	19 3 4	37 51⅓	13 37⅔	113 25 7		131 26 0		6	M	R. 3	Do.
	19 12 11	35 19⅙	15 34⅔	113 31 13		131 2 15		6	C	B.	Do.
	19 12 11	35 19⅙	15 34⅔	113 32 17		130 47 30		6	K	R 2	Do.
	19 12 11	35 19⅙	15 34⅔	113 30 42		131 24 0		6	M	R. 1	Do.
	19 25 53	32 49⅓	17 24½	113 36 31		131 44 0		10	C	D.	Do.
	19 25 53	32 49⅓	17 24½	113 37 10		131 33 30		10	K	R. 1	Do.
	19 36 22	30 55⅔	18 45⅓	113 41 52		131 21 15		6	C	R. 1	Do.
	19 36 22	30 55⅔	18 45⅓	113 40 32		131 30 45		6	K	D.	Do.
	0 54 57	13 45⅔	22 58⅔ L	56 4 55	44 18	131 13 30	54	6	C	D.	☽ à Pollux.
	0 54 57	13 45⅔	22 58⅔	56 4 25		130 58 30		6	K	R. 1	Do.
	1 2 41	14 15⅔	22 8	56 1 15		131 14 45		3	C	R. 1	Do.
	1 2 41	14 15⅔	22 8	56 2 5		131 22 30		3	K	D.	Do.
☽ —— 20.	1 20 14	21 36	22 17½	16 10 2		139 43 30	58	9	C	D.	☽ à Aldebar.
	1 20 14	21 36	22 17½	16 10 33		139 57 15		9	K	R. 1	Do.
	1 34 31	21 30	21 20¾	64 7 52		140 17 0		4	C	D. 1	☽ à Regulus.
	1 34 31	21 30	21 20¾	64 6 53		139 35 15		4	K	R. 1	Do.
	1 46 32	23 7½	20 24⅔	64 0 28		138 48 30		6	C	R. 1	Do.
	1 46 32	23 7½	20 24⅔	64 1 24		139 42 30		6	K	D.	Do.
♂ —— 21.	0 45 48	23 57⅙	24 8⅔	29 21 45	43 27	142 24 45	56	10	C	B.	☽ à Aldebar.
	0 45 48	23 57⅙	24 8⅔	29 21 6		142 42 15		10	K	R. 1	Do
	0 45 48	23 57⅙	24 8⅔	29 21 27		142 32 45		10	M	R. 2	Do.
	0 57 59	22 40	24 2⅙	29 26 30		142 15 0		9	C	R. 1	Do.
	0 57 59	22 40	24 2⅙	29 26 30		142 30 45		9	K	B.	Do.
	0 57 59	22 40	24 2⅙	29 27 6		142 1 0		9	M	R. 2	Do.
	1 14 35	21 1⅙	23 48⅔	29 32 18		142 28 0		8	C	B.	Do.
	1 14 35	21 1⅙	23 48⅔	29 31 41		142 45 0		8	K	R. 1	Do.
	1 14 35	21 1⅙	23 48⅔	29 32 4		142 22 0		8	M	R. 2	Do.
	1 23 0	20 2¾	23 34¼	29 36 7		142 14 0		4	K	D.	Do.
	1 23 0	20 2¾	23 34¼	29 35 52		142 20 45		4	M	R. 1	Do.
	1 34 37	22 55⅙	23 11¾	50 40 13		142 32 0		7	C	R. 1	☽ à Regulus.
	1 34 37	22 55⅙	23 11¾	50 40 6		142 20 45		7	K	D.	Do.
	1 34 37	22 55⅙	23 11¾	50 41 21		143 2 0		7	M	R. 2	Do.
☿ —— 22.	0 37 22	23 42⅙	22 45⅙	42 36 18	43 33	142 51 0	60	6	C	B.	☽ à Aldebar.
	0 37 22	23 42⅙	22 45⅙	42 35 42		143 6 45		6	K	R. 1	Do.

1777.	Time per Watch N° 1.	Altitude of the ☉'s L. L. or ✱.	Moon's Altitude.	Distance of the ☽'s Limb from the ☉'s, or ✱.	Latitude of the Ship.	Longitude East of Greenwich.	Therm.	N° of Obs.	Observers.	Sextant used.	Objects.
	H. ′ ″	° ′	° ′	° ′ ″	° ′	° ′ ″					
♃ Jan. 22.	0 52 41	18 51⅓	23 27¾ L	37 40 18	43 33 S	143 1 30 E	60	6	C.	B.	☽ à Regulus.
	0 52 41	18 51⅓	23 27¾	37 40 45		143 13 45		6	K.	R. 1	Do.
♃——23.	0 8 29	24 56⅙	19 8⅓	55 26 28	43 51	146 23 30	61	10	C.	B.	☽ à Aldeb.
	0 8 29	24 56⅙	19 8⅓	55 25 6		146 53 15		10	B.	R. 3	Do.
	0 25 56	23 13	20 37⅓	55 32 18		146 40 0		4	C.	R. 1	Do.
	0 25 56	23 13	20 37⅓	55 31 23		147 6 15		4	M.	B.	Do.
	0 46 35	19 39⅔	22 7¾	24 42 40	43 48	146 27 0		6	C.	R. 1	☽ à Regulus.
	0 59 32	21 21½	22 50⅙	24 5 53		145 434 5		6	C.	R. 1	Do.
	0 59 32	21 21½	22 50⅙	24 36 51		145 40 15		6	M.	B.	Do.
	2 50 46	31 49	24 27	23 57 26		146 6 30		4	K.	R. 1	Do.
	3 4 54	32 28	24 0½	23 53 22		146 3 0		2	K.	R. 1	Do.
	5 6 34	47 17	14 32½	76 34 45		147 12 45		2	K.	R. 1	☽ à Spica Virg.
♄——25.	0 12 56	16 56½	13 53	37 27 38	43 43	147 48 15	62	6	K.	R. 1	☽ à Pollux.
	0 21 25	17 16½	15 3½	37 31 16		147 46 30		6	C.	R. 1	Do.
	0 21 25	17 16½	15 3½	37 32 35		147 8 0		6	K.	D.	Do.
	0 33 29	17 37⅓	16 42⅔	37 37 47		146 53 0		6	C.	B.	Do.
	0 33 29	17 37⅓	16 42⅔	37 36 31		147 29 15		6	K.	R. 1	Do.
	0 43 55	17 53⅓	18 7	37 40 11		147 37 15		6	C.	R. 1	Do.
	3 17 42	33 31⅓	30 34⅙	52 12 7	43 40	147 37 30		6	M.	R. 2	☽ à Spica Virg.
	3 17 42	33 31⅓	30 34⅙	52 10 50		147 16 15		6	B.	R. 3	Do.
	3 32 49	36 0	30 49⅓	52 5 50		147 11 0		6	M.	R. 3	Do.
	3 32 49	36 0	30 49⅓	52 7 12		147 50 0		6	B.	R. 2	Do.
	5 52 1	54 14⅓	24 40⅙	51 16 3		147 52 0		6	K.	R. 1	Do.
	6 0 33	54 53⅓	23 51⅔	51 11 51		147 27 30		6	K.	R. 1	Do.
	6 10 58	55 28½	22 47⅓	51 7 50		147 39 45		6	K.	R. 2	Do.
♃——30.	9 47 18	30 7⅔	40 44¾ U	99 25 41	43 18	149 38 45	65	10	C.	B.	☽ à Sun.
	9 47 18	30 7⅔	40 44¾	99 25 30		149 32 45		10	B.	R. 2	Do.
	9 57 58	32 3	39 11	99 22 16		149 40 15		9	C.	R. 3	Do.
	9 57 58	32 3	39 11	99 21 15		149 6 30		9	B.	B.	Do.
	11 22 56	46 55⅔	25 41⅔	98 52 44		149 49 15		6	C.	R. 1	Do.
	11 22 56	46 55⅔	25 41⅔	98 51 56		149 22 45		6	K.	B.	Do.
	11 22 56	46 55⅔	25 41⅔	98 52 12		149 31 45		6	M.	R. 2	Do.
♄ Feb. 1.	13 35 3	61 45¼	19 18	75 50 15	44 16½	155 11 30	67½	8	C.	B.	Do.
	13 35 3	61 45¼	19 18	75 51 2		154 39 45		8	K.	R. 1	Do.
	13 35 3	61 45¼	19 18	75 49 44		154 49 45		8	M.	R. 2	Do.
☉—— 2.	13 44 37	61 48¾	17 37⅔	75 46 56	44 42½	155 29 15	67	6	C.	R. 1	Do.
	13 44 37	61 48¾	17 37⅔	75 45 30		154 46 15		6	K.	B.	Do.
	13 44 37	61 48¾	17 37⅔	75 46 30		155 18 45		6	M.	R. 2	Do.
	14 6 26	61 21⅙	14 51	75 35 40		155 9 30		6	C.	D.	Do.
	14 6 26	61 21⅙	14 51	75 36 32		155 37 15		6	K.	R. 2	Do.
	14 6 26	61 21⅙	14 51	75 35 32		155 5 15		6	M.	R. 1	Do.
	11 2 54	47 38½	52 33⅓	65 20 57	44 50	157 0 0	66	6	C.	D.	Do.
	11 2 54	47 38½	52 23⅓	65 21 32		157 18 0		6	K.	R. 1	Do.
	11 2 54	47 38½	52 23⅓	65 21 32		157 18 0		6	M.	R. 2	Do.
	11 8 2	48 27	51 44	65 20 1[illegible]		157 31 0		6	C.	R. 1	Do.
	11 8 2	48 27	51 44	65 19 0		156 52 30		6	K.	D.	Do.
	11 36 55	52 37⅓	47 18⅙	65 8 57		156 46 55		6	C.	B.	Do.
	11 36 55	52 37⅓	47 18⅙	65 9 19		156 47 0		6	K.	R. 2	Do.
	11 36 55	52 37⅓	47 18⅙	65 8 57		156 59 0		6	M.	R. 1	Do.
	11 41 1[illegible]	53 14⅔	46 32½	65 7 4[illegible]		156 53 15		6	C.	R. 2	Do.
	11 41 1[illegible]	53 14⅔	46 32½	65 7 37		156 50 15		6	K.	B.	Do.
	11 41 1[illegible]	53 14⅔	46 32¾	65 7 37		156 50 15		[illegible]	[illegible]	R. 1	Do.

1777.	Time per Watch N° 1.	Altitude of the ☉'s L. L. or ✱.	Moon's Altitude.	Distance of the ☽'s Limb from the ☉'s, or ✱.	Latitude of the Ship.	Longitude East of Greenwich.	Therm.	N° of Obs.	Observers.	Sextant used.	Objects.
	H. ′ ″	° ′	° ′	° ′ ″	° ′	° ′ ″					
☉ Feb. 2.	11 46 28	53 57⅔	45 45⅙ L	65 6 0	44 50 N	156 56 45 E	66	6	C.	B.	☽ à Sun.
	11 46 28	53 57⅔	45 45⅙	65 5 35		156 42 0		6	K.	R. 2	Do.
	12 9 14	56 40⅔	42 0¾	64 59 12		157 39 15		6	C.	R. 1	Do.
	12 9 14	56 40⅔	42 0¾	64 57 32		156 47 30		6	K.	D.	Do.
	12 9 14	56 40⅔	42 0¾	64 56 49		156 46 45		6	T.	R. 2	Do.
♂ —— 4.	9 46 3	37 33	66 33	41 42 16	43 34	161 28 30	67	7	C.	D.	Do.
	9 46 3	37 33	66 33	41 42 6		161 24 0		7	K.	R. 1	Do.
	9 46 3	37 33	66 33	41 42 25		161 33 0		7	B.	R. 3	Do.
	9 53 48	39 16⅔	67 23⅓	41 40 45		162 5 45		6	C.	R. 1	Do.
	9 53 48	39 16⅔	67 23⅓	41 40 27		161 55 45		6	K.	D.	Do.
	9 53 48	39 16⅔	67 23⅓	41 40 35		161 59 30		6	B.	R. 3	Do.
	9 53 48	39 16⅔	67 23⅓	41 40 35		161 59 30		6	M.	R. 2	Do.
	10 12 57	42 34⅓	67 48⅔	41 33 49		161 49 45		8	C.	B.	Do.
	10 12 57	42 34⅓	67 48⅔	41 34 45		162 16 30		8	K.	R. 2	Do.
	10 12 57	42 34⅓	67 48⅔	41 35 7		162 28 0		8	M.	R. 1	Do.
	10 19 43	43 44⅓	67 36	41 32 10		162 6 0		6	C.	R. 2	Do.
	10 19 43	43 44⅓	67 36	41 31 27		161 45 0		6	K.	B.	Do.
	10 19 43	43 44⅓	67 36	41 31 12		161 38 15		6	M.	R. 3	Do.
	10 25 55	44 46⅔	67 22⅙	41 29 15		161 37 45		6	C.	R.	Do.
	10 25 55	44 46⅔	67 22⅙	41 29 15		161 37 45		6	K.	R. 1	Do.
	10 25 55	44 46⅔	67 22⅙	41 29 43		161 51 30		6	M.	R. 3	Do.
♂ —— 11.	14 28 42	52 40½	51 46⅓ U	39 52 29		173 47 0	65	8	C.	D.	Do.
	14 28 42	52 40½	51 46⅓	39 52 5	40 24	173 57 0		8	K.	R. 1	Do.
	14 28 42	52 40½	51 46⅓	39 52 50		173 47 0		8	M.	R. 2	Do.
	14 28 42	52 40½	51 46⅓	39 52 46		173 39 15		8	B.	R. 3	Do.
	14 34 41	51 42⅔	52 2¾	39 54 47		173 49 15		7	C.	R. 1	Do.
	14 34 41	51 42⅔	52 2¾	39 55 0		173 44 0		7	K.	D.	Do.
	14 34 41	51 42⅔	52 2¾	39 55 10		173 34 30		7	M.	R. 3	Do.
	14 34 41	51 42⅔	52 2¾	39 55 15		173 31 0		7	B.	R. 2	Do.
	14 49 34	49 17⅔	52 20⅙	40 0 27		173 53 0		6	C.	B.	Do.
	14 49 34	49 17⅔	52 20⅙	40 0 20		173 59 0		6	K.	R. 2	Do.
	14 49 34	49 17⅔	52 20⅙	40 0 57		173 25 0		6	M.	R. 1	Do.
	14 55 12	48 23⅙	52 30⅔	40 2 0		174 11 15		6	C.	R. 2	Do.
	14 55 12	48 23⅙	52 30⅔	40 2 30		173 47 0		6	K.	B.	Do.
	14 55 12	48 23⅙	52 30⅔	40 3 22		173 32 30		6	M.	R. 3	Do.
	15 1 52	47 7⅔	52 30¾	40 5 40		173 37 15		6	C.	B.	Do.
	15 1 52	47 7⅔	52 30¾	40 5 37		173 39 30		6	K.	R. 1	Do.
	15 15 21	44 53⅓	52 25	40 9 43		174 7 0		6	K.	B.	Do.
	15 19 46	44 9½	52 18⅓	40 12 34		173 41 15		6	K.	R. 1	Do.
	15 28 11	42 36⅔	52 5⅙	40 15 2		174 1 30		7	K.	R. 2	Do.
	15 35 36	41 16	51 52	40 18 29		173 23 45		7	K.	D.	Do.
	15 42 13	40 3⅔	51 31	40 21 22		173 34 15		6		R. 3	Do.
	20 14 41	31 19½	11 30 L	60 54 36	41 32	174 14 15	64	8	C.	D.	☽ à Aldeb.
	20 14 41	31 19½	11 30	60 53 39		174 4 30		8	K.	R. 1	Do.
	20 14 41	31 19½	11 30	60 55 19		173 50 30		8	M.	R. 2	Do.
	20 24 17	30 46	9 42⅓	60 48 6		174 2 0		10	C.	R. 1	Do.
	20 24 17	30 46	9 42⅓	60 48 44		173 59 0		10	K.	D.	Do.
	20 24 17	30 46	9 42⅓	60 49 16		174 30 0		10	M.	R. 2	Do.
♄ —— 27.	7 44 56	22 41⅙	31 1⅓ U	120 25 29	41 48	177 35 15	64	6	C.	R. 1	☽ à Sun.
	7 44 56	22 41⅙	31 1⅓	120 24 37		177 7 0		6	K.	B.	Do.
	7 50 33	23 43⅓	30 1⅙	120 22 40		176 55 15	63	6	C.	B.	Do.
	7 50 33	23 43⅓	30 1⅙	120 22 13	41 17½	176 40 0		6	K.	R. 1	Do.

1777.	Time per Watch N° 1.	Altitude of the ☉'s L. L. or ✳.	Moon's Altitude.	Distance of the ☽'s Limb from the ☉'s or ✳.	Latitude of the Ship.	Longitude East of Greenwich.	Therm.	N° of Obs.	Observers.	Sextant used.	Objects.
	h ′ ″	° ′	° ′	° ′ ″	° ′	° ′ ″					
March 1.	23 28 28	40 17⅔	15 3½ L	39 41 10	41 25 S	179 35 45 E	69	6		R. 1	☽ à Spica Virg.
	28 46 14	43 2⅓	17 58⅙	39 49 20		179 36 30		6	K.	D.	Do.
	8 51 45	36 37⅔	37 39⅔	97 56 40	42 33	179 46 30	64½	6	C.	D.	☽ à Sun.
	8 51 45	36 37⅔	37 39⅔	97 57 12		180 3 15		6	K.	R. 1	Do.
	8 57 17	36 33⅔	36 41⅓	97 55 45		180 20 15		6	R.	R. 1	Do.
	8 57 17	36 33⅔	36 41⅓	97 54 37		179 44 40		6	K.	R. 1	Do.
	9 5 32	37 52	35 10½	97 52 7		180 4 30		6	C.	B.	Do.
	9 5 32	37 52	35 10½	97 51 22		179 38 20		6	K.	R. 3	Do.
	9 9 1	38 28	34 29⅙	97 50 37		179 49 15		6	C.	R. 3	Do.
	9 9 1	38 28	34 29⅙	97 50 45		179 53 25		6	K.	B.	Do.
	9 14 51	39 19⅓	33 33⅓	97 48 2		179 37 15		6	C.	B.	Do.
	9 14 51	39 19⅓	33 33⅓	97 48 15		179 44 0		6	K.	R. 3	Do.
	9 20 10	40 8⅓	33 26⅔	97 47 20		179 38 30		6	C.	R. 2	Do.
	9 20 10	40 8⅓	33 26⅔	97 46 55		180 4 0		6	K.	R. 1	Do.
☽ —— 3.	1 45 12	58 14⅙	27 42⅔	65 13 12	41 59	184 40 30	66	6	C.	R. 1	☽ à Spica Virg.
	1 58 33	58 24⅙	30 12⅔	65 19 55		184 26 0		6	C.	R. 2	Do.
	2 13 16	58 14	33 11¾	65 26 32		184 26 0		6	K.	B.	Do.
♂ —— 4.	11 17 9	55 47½	36 21 U	61 52 42	41 30	187 7 0	64	6	C.	D.	☽ à Sun.
	11 17 9	55 47½	36 21	61 52 52		187 11 45		6	K.	R. 1	Do.
	11 17 9	55 47½	36 21	61 52 43		187 3 0		6	M.	R. 2	Do.
	11 22 48	55 50½	35 20¾	61 50 52		186 56 15		6	C.	R. 1	Do.
	11 22 48	55 50½	35 20¾	61 51 2		187 0 15		6	K.	D.	Do.
	11 22 48	55 50½	35 20¾	61 50 52		186 56 0		6	M.	R. 3	Do.
	11 31 28	55 53⅙	33 43⅕	61 46 14		186 50 0	62¼	6	C.	B.	Do.
	11 31 28	55 53⅙	33 43⅕	61 26 15		187 0 0		6	K.	R. 2	Do.
	11 31 28	55 53⅙	33 43⅕	61 46 27		187 2 45		6	M.	R. 1	Do.
♀ —— 5.	11 36 51	55 50½	32 41⅔	61 44 33	39 51	187 14 30	63	6	C.	R. 2	Do.
	11 36 51	55 50½	32 41⅔	61 43 49		186 50 0		6	K.	B.	Do.
	11 36 51	55 50½	32 41⅔	61 43 17		187 4 30		6	M.	R 1	Do.
☉ —— 16.	14 23 49	28 16	27 50⅔	87 59 30	33 41	198 56 30	74	6	C.	B.	Do.
	14 23 49	28 16	27 50⅔	88 0 25		198 30 0		6	K.	R. 1	Do.
	14 29 35	27 7⅓	28 24	88 2 7		198 32 15		6	C.	R. 1	Do.
	14 29 35	27 7⅓	28 24	83 1 25		198 57 0		6	K.	B.	Do.
	14 45 3	23 58½	29 58½	88 6 47		198 50 30		6	C.	D.	Do.
	14 45 3	23 58½	29 58½	88 7 22		198 32 45		6	K.	R. 2	Do.
♂ —— 18.	15 46 45	40 31	26 15½	112 50 0	31 49	200 6 0	72½	8	K.	R. 1	Do.
	15 46 45	40 31	26 15½	112 49 26		199 48 45		8	B.	R. 3	Do.
♃ —— 20.	23 18 24	74 12	22 50 L	62 2 31	28 30	201 43 0	72	4	M.	R. 1	Do.
☿ —— 21.	17 53 9	34 3¾	32 1¾	39 8 8	27 33	202 6 0		5	C.	D.	☽ à Pollux.
	17 53 9	34 3¾	32 1¾	39 9 27		201 27 30		5	K.	R. 1	Do.
	17 53 9	34 3¾	32 1¾	39 10 15		201 4 30		5	M.	R. 2	Do.
	17 53 9	34 3¾	32 1¾	39 10 54		200 44 30		5	B.	R. 3	Do.
	18 7 45	34 1¾	34 24	39 15 9		201 3 0		5	C.	R. 1	Do.
	18 7 45	34 1¾	34 24	39 14 26		201 19 30		5	K.	D.	Do.
	18 7 45	34 1¾	34 24	39 15 21		200 57 0		5	M.	R. 3	Do.
	18 7 45	34 1¾	34 24	39 15 21		201 1 45		5	B.	R. 2	Do.
	18 25 36	5 22⅓	37 41⅔ U	51 27 30	27 30	201 57 15		8	C.	D.	☽ à Spica Virg.
	18 25 36	5 22⅓	37 41⅔	51 28 2		202 15 30		8	K.	R. 1	Do.
	18 25 36	5 22⅓	37 41⅔	51 27 58		202 12 0		8	M.	R. 3	Do.
	18 25 36	5 22⅓	37 41⅔	51 27 33		202 0 15		8	B.	R. 2	Do.
	18 33 47	17 10	38 58	51 25 7		202 5 45		6	C.	R. 1	Do.
	18 33 47	17 10	38 58	51 24 54		201 57 30		6	K.	D.	Do.

1777.	Time per Watch N° 1.	Altitude of the ☉'s L. L. or ✳.	Moon's Altitude.	Distance of the ☽'s Limb from the ☉'s, or ✳.	Latitude of the Ship.	Longitude East of Greenwich.	Therm.	N° of Obs.	Observers.	Sextant used.	Objects.
	° ′ ″	° ′	° ′	° ′ ″	° ′	° ′ ″					
♀ March 21	18 33 47	17 10	38 58 U	51 25 57	27 30 S	202 29 45 E	72	6	M.	R. 2	☽ à Spica Virg
	18 33 47	17 10	38 58	51 26 40		202 51 0		6	B.	R. 3	Do.
☉ —— 23.	18 42 48	21 8½	32 9	63 38 47	25 51	202 51 6	74½	6	C.	D.	Do.
	18 42 48	21 8½	32 9	63 37 52		201 32 45		6	K.	R. 1	Do.
	18 42 48	21 8½	32 9	63 38 47		202 2 18		6	M.	R. 2	Do.
	18 42 48	21 8½	32 9	63 38 45		202 0 0		6	B.	R. 3	Do.
	18 49 36	22 38⅕	33 26½	63 35 17		201 23 30		6	C.	R. 1	Do.
	18 49 36	22 38⅕	33 26½	63 30 47		202 10 30		6	K.	D.	Do.
	18 49 36	22 38⅕	33 26½	63 36 12		201 52 46		6	M.	R. 3	Do.
	18 49 36	22 38⅕	33 26½	63 36 40		202 6 40		6	B.	R. 2	Do.
	18 58 22	33 9	35 10½	63 35 50		200 28 15		6	C.	R. 1	☽ à Pollux.
	18 58 22	33 9	35 10½	63 33 30		201 39 30		6	K.	D.	Do.
	18 58 22	33 9	35 10½	63 33 45		201 31 30		6	M.	R. 3	Do.
	18 58 22	33 9	35 10½	63 36 20		200 13 0		6	B.	R. 2	Do.
	19 5 20	32 39⅔	36 29	63 36 7		201 28 45	74	6	C.	D.	Do.
	19 5 20	32 39⅔	36 29	63 37 30		200 54 15		6	K.	R. 1	Do.
	19 5 20	32 39⅔	36 29	63 37 37		200 50 45		6	M.	R. 2	Do.
	19 5 20	32 39⅔	36 29	63 36 15		201 32 15		6	B.	R. 3	Do.
☽ —— 24.	21 2 10	18 14⅕	52 42 L	76 43 9	25 14	200 16 0	70	6	C.	R. 1	Do.
	21 2 10	18 14⅕	52 42	76 41 57		200 50 0		6	B.	R 3	Do.
	21 13 16	16 30⅙	54 24⅔	76 44 47		201 2 30		6	C.	D	Do.
	21 13 16	16 30⅙	54 24⅔	76 45 27		200 56 30		6	B.	R. 3	Do.
	21 42 13	26 29⅔	58 24½	59 47 20		201 22 15		6	C.	D.	☽ à Antares.
	21 42 13	26 29⅔	58 24½	59 48 9		201 51 15		6	B.	R. 3	Do.
	21 50 57	28 21½	59 40⅕	59 47 12		202 34 15		6	C.	R. 1	Do.
	21 50 57	28 21½	59 40⅕	59 55 32		201 42 45		6	B.	R. 3	Do.
	23 8 35	45 33⅔	62 48½	59 21 54		201 43 15		6	K.	R. 1	Do.
	23 8 35	45 33⅔	62 48½	59 21 20		201 24 15		6	M.	R. 2	Do.
	23 16 20	47 19	62 29	59 18 57		201 24 15		6	K.	R. 2	Do.
	23 16 20	47 19	62 29	59 19 59		201 56 0		6	M.	R. 1	Do.
	23 50 2	24 5	60 6⅔ U	41 38 42	25 8	201 32 15	71	6	K.	R. 1	☽ à Regulus.
	23 50 2	24 5	60 6⅔	41 39 37		200 59 0		6	M.	R. 2	Do.
	23 58 54	22 18½	59 4⅔	41 43 22		200 19 45		6	K	R. 2	Do.
	23 58 54	22 18½	59 4⅔	41 42 37		200 42 45		6	M.	R. 1	Do.
♄ —— 29.	2 59 12	31 58	85 30⅕	49 11 43	22 8	201 13 15	81	5	K.	R. 1	☽ à Spica Virg.
☉ —— 30.	1 7 46	57 16	61 48⅓ L	60 55 12	21 44	201 22 45	80½	5	K.	R. 1	Do.
	2 11 15	42 34⅓	76 4	61 14 40		201 18 45		6	K.	D.	Do.
	2 22 49	39 55	78 44⅕	61 17 42		201 1 45		6	K.	R. 3	Do.
	2 33 56	37 18	81 32	61 21 37		201 3 30		6	K.	R. 2	Do.
	7 10 39	36 35⅔	35 41⅓ U	106 41 20	20 41	202 27 0	82½	6	C.	B.	☽ à Sun.
	7 10 39	36 35⅔	35 41⅓	106 40 37		202 4 30		6	K.	R. 1	Do.
	7 10 39	36 35⅔	35 41⅓	106 41 17		202 25 15		6	M.	R. 2	Do.
	7 15 19	37 19	34 40⅔	106 39 42		202 29 15		6	C.	R. 1	Do.
	7 15 19	37 19	34 40⅔	106 39 47		202 24 0		6	K.	B.	Do.
	7 15 19	31 19	34 40⅔	106 39 32		202 26 45		6	M.	R. 2	Do.
	7 21 53	39 3	33 11⅓	106 36 17		202 41 15		6	K.	R. 2	Do.
	7 21 53	39 3	33 11⅓	106 37 52		202 30 30		6	M.	R. 1	Do.
	7 21 53	39 3	33 11⅓	106 37 22		202 19 45		6	B.	R. 3	Do.
	7 27 1	40 10	32 0	106 35 47		202 0 15		6	K.	D.	Do.
	7 27 1	40 10	32 0	106 34 37		202 14 15		6	M.	R. 3	Do.
	7 27 1	40 10	32 0	106 34 40		202 16 0		6	B.	R. 1	Do.
	7 51 39	49 16⅔	26 36	106 25 23		202 9 45		6	C.	B.	Do.

1777.	Time per Watch N° 1.	Altitude of the ☉'s L. L. or ✳.	Moon's Altitude.	Distance of the ☽'s Limb from the ☉'s, or ✳.	Latitude of the Ship.	Longitude East of Greenwich.	Therm.	N° of Obs.	Observers.	Sextant used.	Objects.
	H. ′ ″	° ′	° ′	° ′ ″	° ′	° ′ ″	°				
☉ March 30	7 51 39	49 16⅔	26 36 U	106 25 25	20 41 S	202 14 15 E	82½	6	R.	R. 1	☽ à Sun.
☽ —— 31.	7 24 16	39 35½	44 14⅓	94 59 22	20 4	202 4 45	81	6	C.	B.	Do.
	7 24 16	39 35½	44 14⅓	95 0 5		202 22 30		6	K.	R. 1	Do.
	7 24 16	39 35½	44 14⅓	95 0 2		202 20 30		6	M.	R. 2	Do.
	7 24 16	39 35½	44 14⅓	94 59 22		202 3 0		6	B.	R. 2	Do.
	7 28 50	40 33½	43 12⅓	94 58 45		202 30 15		6	C.	R. 1	Do.
	7 28 50	40 33½	43 12⅓	94 57 51		202 9 0		6	K.	B.	Do.
	7 28 50	40 33½	43 12⅓	94 57 20		201 46 15		6	M.	R. 3	Do.
	7 28 50	40 33½	43 12⅓	94 58 22		202 21 30		6	B.	R. 2	Do.
	7 47 0	44 23	39 10	94 51 27		202 1 15		6	K.	R. 2	Do.
	7 47 0	44 23	39 10	94 50 48		201 40 45		6	M.	R. 1	Do.
	7 47 0	44 23	39 10	94 51 0		201 47 0		6	B.	R. 3	Do.
	7 56 3	46 14	37 7⅓	94 48 54		202 18 0		6	C.	R. 2	Do.
	7 56 3	46 14	37 7⅓	94 47 40		201 40 0		6	K.	B.	Do.
	7 56 3	46 14	37 7⅓	94 47 40		201 40 0		6	M.	R. 3	Do.
	7 56 3	46 14	37 7⅓	94 48 25		202 3 30		6	B.	R. 1	Do.
♂ April 1.	2 23 25	81 1	54 55⅔ L	41 5 52	19 56	201 12 15	82	6	K.	R. 1	☽ à Antares.
	2 23 25	81 1	54 55⅔	41 7 15		200 51 15		6	M.	R. 2	Do.
	2 37 2	78 39⅙	57 52½	41 12 17		201 3 45		6	K.	R. 2	Do.
	2 37 2	78 39⅙	57 52½	41 10 12		201 8 30		6	M.	R. 1	Do.
	2 37 2	78 39⅙	57 52½	41 12 12		201 36 0		6	B.	R. 3	Do.
	2 50 16	75 44⅓	60 54	41 15 35		201 0 15		6	M.	D.	Do.
	2 50 16	75 44⅓	60 54	41 15 47		200 58 0		6	B.	R. 2	Do.
	3 2 22	73 23	63 49	41 19 12		201 10 30		6	K.	D.	Do.
	3 2 22	73 23	63 49	41 19 45		200 58 15		6	M.	R. 3	Do.
	3 2 22	73 23	63 49	41 20 14		206 40 45		6	B.	R. 1	Do.
☿ —— 2.	9 43 56	62 49½	36 51 U	69 41 45	20 0½	201 17 45	82	6	C.	D.	☽ à Sun.
	9 43 56	62 49½	36 51	69 42 25		201 30 30		6	K.	R. 1	Do.
	9 43 56	62 49½	36 51	69 43 15		202 2 30		6	M.	R. 2	Do.
	9 43 56	62 49½	36 51	69 43 42		202 15 30		6	B.	R. 3	Do.
	9 48 57	63 11⅔	35 45½	69 40 50		201 54 30		6	C.	R. 2	Do.
	9 48 57	63 11⅔	35 45½	69 40 15		201 38 0		6	K.	D.	Do.
	9 48 57	63 11⅔	35 45½	69 40 52		202 10 15		6	M.	R. 3	Do.
	9 48 57	63 11⅔	35 45½	69 41 30		202 14 0		6	B.	R. 2	Do.
	10 2 8	64 0⅓	32 47	69 34 15		201 30 15		6	C.	B.	Do.
	10 2 8	64 0⅓	32 47	69 35 20		202 0 45		6	K.	R. 2	Do.
	10 2 8	64 0⅓	32 47	69 34 10		201 32 0		6	M.	R. 1	Do.
	10 6 35	64 11⅓	31 46½	69 33 45		202 11 30		6	C.	R. 2	Do.
	10 6 35	64 11⅓	31 46½	69 32 30		201 36 30		6	K.	B.	Do.
♂ —— 15.	13 55 6	32 41	28 44	94 4 27	18 8	196 18 45	83¼	6	C.	B.	Do.
	13 55 6	32 41	28 44	94 5 30		165 49 15		6	B.	R. 3	Do.
	14 8 49	30 53⅓	30 13⅔	94 7 17		196 12 45		6	C.	R. 3	Do.
	14 8 49	30 53⅓	30 13⅔	94 7 25		196 9 0		6	B.	D.	Do.
	14 21 14	27 59	32 32½	94 12 10		195 43 30		5	B.	R. 3	Do.
♃ —— 16.	13 25 48	39 47	12 55	105 32 35	18 5	195 53 0	83	6	K.	R. 1	Do.
	13 25 48	39 47	12 55	105 33 2		195 49 0		6	M.	R. 2	Do.
	13 25 48	39 47	12 55	105 32 50		195 31 0		6	B.	R. 3	Do.
	13 34 44	37 54	14 43	105 36 55		195 45 45		6	K.	R. 2	Do.
	13 34 44	37 54	14 43	105 37 7		195 31 45		6	M.	R. 3	Do.
	13 34 44	37 54	14 43	105 37 37		195 20 0		6	B.	R. 1	Do.
	13 46 21	35 24	17 5	105 41 30		196 42 30		6	K.	B.	Do.
	13 46 21	35 24	17 5	105 39 4[illegible]		195 48 45		6	M.	R. 1	Do.

1777.	Time per Watch N° 1.	Altitude of the ☉'s L. L. or ✱.	Moon's Altitude.	Distance of the ☽'s Limb from the ☉'s, or ✱.	Latitude of the Ship.	Longitude East of Greenwich.	Therm.	N° of Obs.	Observers.	Sextant used.	Objects.
	H. ′ ″	° ′	° ′	° ′ ″	° ′	° ′ ″	°				
♀ April 16.	13 46 21	35 24	17 5 U	105 41 37	18 5 S	196 42 30 E	83	6	B.	R. 2	☽ à Sun.
	14 45 36	22 36½	28 5	106 2 5		195 41 45		6	K.	R. 1	Do.
	14 52 0	21 7	30 7	106 4 37		195 23 45		6	K.	R. 2	Do.
	14 58 58	19 29½	31 28	106 5 0		196 14 45		6	K.	D.	Do.
	17 22 30	19 30	51 45½	67 14 17	18 1	197 18 45	79	6	K.	R. 1	☽ à Spica Virg.
	17 22 30	19 30	51 45½	67 16 22		196 47 30		6	M.	D.	Do.
	17 22 30	19 30	51 45½	67 15 30		197 9 0		6	B.	R. 3	Do.
	17 30 11	21 22	52 9	67 13 57		196 57 30		6	K.	D.	Do.
	17 30 11	21 22	52 9	67 13 7		197 20 0		6	M.	R. 3	Do.
	17 30 11	21 22	52 9	67 15 22		197 32 0		1	B.	R. 6	Do.
	17 39 17	23 30⅔	52 40	67 11 17		197 20 30		6	K.	R. 3	Do.
	17 39 17	23 30⅔	52 40	67 10 55		197 6 45		6	M.	R. 1	Do.
	17 39 17	23 30⅔	52 40	67 11 0		197 10 30		6	B.	D.	Do.
	17 52 29	15 50	53 8	67 23 30		197 13 0	79½	6	K.	R. 1	☽ à Aldebaran.
	17 52 29	15 50	53 8	67 23 57		197 3 30		6	M.	R. 3	Do.
	17 52 29	15 50	53 8	67 23 40		196 59 30		6	B.	D.	Do.
	17 59 13	14 18	53 25⅓	67 26 7		196 51 45		6	K.	D.	Do.
	17 59 13	14 18	53 25⅓	67 25 57		196 52 30		6	M.	R. 1	Do.
	17 59 13	14 18	53 25⅓	67 25 45		196 52 0		6	B.	R. 3	Do.
♀ May 2.	11 28 51	54 0	23 14	74 8 43		185 4 45		10	K.	R. 1	☽ à Sun.
♀ —— 14.	14 51 45	25 22	35 7	87 39 4	20 14	184 50 0	76½	8	C.	D.	Do.
	14 51 45	25 22	35 7	87 38 58		184 57 45		8	K.	R.	Do.
	14 51 45	25 22	35 7	87 39 2		184 48 30		8	M.	R. 2	Do.
	14 57 38	24 15⅔	35 58	87 40 27		185 3 45		6	C.	R. 1	Do.
	14 57 38	24 15⅔	35 58	87 40 30		185 2 15		6	K.	D.	Do.
	14 57 38	24 15⅔	35 58	87 41 0		184 33 30		6	M.	R. 3	Do.
	15 11 42	20 48	39 4	87 45 39		184 27 45		7	C.	B.	Do.
	15 20 6	19 45	39 59	87 47 25		184 29 45		6	C.	R. 2	Do.
	15 20 6	19 45	39 59	87 47 59		184 24 45		6	K.	B.	Do.
	15 20 6	19 45	39 59	87 47 37		184 41 0		6	B.	R. 3	Do.
	18 36 29	23 36¼	50 34½ L	32 33 30	19 54	185 8 30	77	4	C.	B.	☽ à Pollux.
	18 36 29	23 36¼	50 34½	32 32 45		185 30 0		4	K.	R. 1	Do.
	18 36 29	23 36¼	50 34½	32 33 19		186 13 30		4	M.	R. 2	Do.
	18 46 13	54 19½	49 36⅓	58 14 0		185 45 15		6	C.	B.	☽ à Spica Virg.
	18 46 13	54 19½	49 36⅓	58 13 17		185 23 45		6	K	R. 1	Do.
	18 46 13	54 19½	49 36⅓	58 13 15		185 32 45		6	M.	R. 2	Do.
	18 54 57	20 33	48 17⅓	32 39 0		185 34 45		6	C.	R. 1	☽ à Pollux.
	18 54 57	20 33	48 17⅓	32 38 58		135 34 45		6	K.	B.	Do.
	18 54 57	20 33	48 17⅓	32 38 47	19 52	185 42 45		6	B.	R. 3	Do.
	19 0 6	59 15½	46 59	58 7 10		185 55 30	76	6	C.	R. 1	☽ à Spica Virg.
	19 0 6	59 15½	46 59	58 7 23		185 59 15		6	K.	B.	Do.
	19 0 6	59 15½	46 59	58 7 30		186 5 30		6	B.	R. 3	Do.
	19 20 12	62 5⅔	45 32⅔	58 2 57		185 19 45		6	C.	D.	Do.
	19 20 12	62 5⅔	45 32⅔	58 2 35		185 37 15		6	K.	R. 2	Do.
	19 20 12	62 5⅔	45 32⅔	58 2 25		184 54 45		6	B.	R. 1	Do.
♃ —— 15.	15 1 16	23 18⅓	30 31 U	99 10 27	19 49¾	184 28 5	79	6	M.	R. 2	☽ à Sun.
	15 1 16	23 18⅓	30 31	99 10 27		184 22 35		6	K.	R. 1	Do.
	15 9 44	21 37	32 2	99 11 55	19 46	184 50 45	77	6	K.	D.	Do.
	17 59 11	28 54⅔	55 43⅔ L	44 39 27		85 13 45		6	C.	D.	☽ à Pollux.
	17 59 11	28 54⅔	55 43⅔	44 39 5	19 40	185 24 45		6	K.	R. 1	Do.
	17 59 11	28 54⅔	55 43⅔	44 39 20		185 13 30		6	M.	R. 2	Do.
	18 4 56	28 5½	56 11	44 41 17		185 10 30		6	C.	R. 1	Do.

1777.	Time per Watch N° 1.	Altitude of the ☉'s L. L. or ✳.	Moon's Altitude.	Distance of the ☽'s Limb from the ☉'s, or ✳.	Latitude of the Ship.	Longitude East of Greenwich.	Therm.	N° of Obs.	Observers.	Sextant used.	Objects.
	° ′ ″	° ′	° ′	° ′ ″	° ′	° ′ ″	°				
♃ May 15.	18 4 56	28 5½	56 14 L	44 41 20	19 40 S	185 9 50 E	77	6	K.	D.	☽ à Pollux.
	18 13 2	47 47	56 24⅓	46 5 15	19 42	185 1 30	77½	6	C.	R. 1	☽ à Spica Virg.
	18 13 2	47 47	56 24⅓	46 6 37		185 42 45		6	K.	D.	Do.
	18 13 2	47 47	56 24⅓	46 5 37		185 12 45		6	M.	R. 2	Do.
	18 19 39	49 15½	56 34⅓	46 4 22		185 39 30		6	C.	D.	Do.
	18 19 39	49 15½	56 34⅓	46 3 37		185 17 0		6	K.	R. 1	Do.
	18 19 39	49 15½	56 34⅓	46 4 15		185 35 45		6	M.	R. 3	Do.
	18 29 6	51 29	56 36	46 0 23		185 5 15		6	C.	B.	Do.
	18 29 6	51 29	56 36	46 1 15		185 31 15		6	K.	R. 2	Do.
	18 29 6	51 29	56 36	46 1 7		185 27 15		6	M.	R. 1	Do.
	18 35 30	56 33⅔	44 47	44 50 11	19 43	185 13 45	77	6	C.	B.	☽ à Pollux.
	18 35 30	56 33⅔	44 47	44 50 14		185 18 30		6	K.	R. 2	Do.
	18 35 30	56 33⅔	44 47	44 49 22		185 43 15		6	M.	R. 3	Do.
	18 41 25	22 0	56 27	44 51 42		185 15 45		6	C.	R. 1	Do.
	18 41 25	22 0	56 27	44 51 46		185 18 45		6	K.	R. 2	Do.
	18 47 43	55 51⅔	56 15⅔	45 55 22		185 54 15		6	C.	R. 2	☽ à Spica Virg.
	18 47 43	55 51⅔	56 15⅔	45 55 3		185 44 45		6	K.	B.	Do.
☽ —— 19.	20 45 31	47 41⅔	72 48	43 31 11	19 46	185 50 30	78	6	C.	D.	☽ à Antares.
	20 45 31	47 41⅔	72 48	43 31 6		185 58 0		6	K.	R. 1	Do.
	20 50 45	48 52	73 37	43 29 57		186 6 45		6	C.	R. 1	Do.
	20 50 45	48 52	73 37	43 30 3		186 9 15		6	K.	D.	Do.
	21 1 11	28 45½	74 24½	57 39 45		185 20 30		6	C.	R. 1	Do.
	21 1 11	28 45½	74 24½	57 39 46		185 18 0		6	K.	B.	Do.
	21 8 10	27 26⅔	74 34½	57 41 31		185 26 30		6	C.	B.	Do.
	21 8 10	27 26⅔	74 34½	57 40 15		186 4 30		6	K.	R. 1	Do.
♃ —— 29.	9 34 46	40 50	31 27⅔ U	91 55 55	19 45⅓	185 21 15	76	6	C.	D.	☽ à Sun.
	9 34 46	40 50	31 27⅔	91 55 42		185 33 45		6	K.	B. 1	Do.
	9 34 46	40 50	31 27⅔	91 55 42		185 19 30		6	B.	R. 3	Do.
	9 39 12	41 23	30 26	91 54 35		185 54 30		6	C.	R. 1	Do.
	9 39 12	41 23	30 26	91 54 32		185 39 0		6	K.	D.	Do.
	12 45 27	43 3½	17 39	50 22 0		184 49 0		5	K.	R. 1	Do.
♀ July 25.	8 9 47	29 3½	16 35	111 18 0	25 46	192 57 30	76½	7	C.	R. 1	Do.
	8 9 47	29 3½	16 35	111 17 8		193 1 45		7	K.	R. 1	Do.
	8 9 47	29 3½	16 35	111 18 14		193 2 30		7	B.	R. 3	Do.
	8 28 1	31 46	12 38	111 8 32		193 26 35		6	K.	R. 2	Do.
	8 28 1	31 46	12 38	111 8 17		193 48 30		6	B.	R. 1	Do.
	8 34 26	32 45	11 14	111 7 17		193 14 0		6	C.	R.	Do.
	8 34 26	32 45	11 14	111 5 9		193 7 20		6	K.	D.	Do.
	8 34 26	32 45	11 14	111 6 0		193 27 0		6	B.	R. 2	Do.
♄ —— 26.	8 44 45	34 25½	16 3¾	97 44 58	26 45	194 7 45	71½	5	B.	R. 3	Do.
	8 44 45	34 25½	16 3¾	97 44 36		193 58 15		5	K.	R. 1	Do.
	8 50 54	35 14	14 50	97 43 10		194 43 52		5	C.	R. 4	Do.
	8 50 54	35 14	14 50	97 43 2		194 12 55		5	K.	R. 2	Do.
	8 50 54	35 14	14 50	97 42 33		194 23 15		5	B.	R. 1	Do.
♀ Aug. 8.	10 1 20	49 38½	36 49	52 16 7	24 8	210 2 25	72	6	C.	R. 4	Do.
	10 1 20	49 38½	36 49	52 16 51		209 38 30		6	K.	R. 1	Do.
	10 1 20	49 38½	36 49	52 16 40		209 44 15		6	B.	R. 3	Do.
	10 1 20	49 38½	36 49	52 16 37		209 44 15		6	R.	R. 2	Do.
	10 7 38	49 30	38 9	52 18 58		209 26 30		6	C.	R. 1	Do.
	10 7 38	49 30	38 9	52 19 5		209 21 30		6	K.	R. 4	Do.
	10 7 38	49 30	38 9	52 18 5		209 55 40		6	B.	R. 2	Do.
	10 7 38	49 30	38 9	52 18 44		209 33 40		6	R.	R. 3	Do.

1777.	Time per Watch N° 1.	Altitude of the ☉'s L. L. or ✱.	Moon's Altitude.	Distance of the ☽'s Limb from the ☉'s or ✱.	Latitude of the Ship.	Longitude East of Greenwich.	Therm.	No. of Obs.	Observers.	Sextant used.	Objects.
	H. ′ ″	° ′	° ′	° ′ ″	° ′	° ′ ″	°				
♀ Aug. 8.	10 14 46	49 18	39 36 U	50 20 50	24 8 S	209 42 15 E	72	6	C.	R. 2	☽ à Sun.
	10 14 46	49 18	39 36	52 20 40		209 53 15		6	K.	D.	Do.
	10 14 46	49 18	39 36	52 21 8		209 32 15		6	B	R. 1	Do.
	10 14 46	49 18	39 36	52 19 55		210 1 50		6	R.	R. 3	Do.
	10 19 4	49 6	40 31	52 21 35		210 1 45		6	C.	D.	Do.
	10 19 4	49 6	40 31	52 22 17		209 28 40		6	K.	R. 2	Do.
	10 19 4	49 6	40 31	52 21 35		209 37 0		6	B.	R. 3	Do.
	10 19 4	49 6	40 31	52 22 23		209 22 45		6	R.	R. 1	Do.
	16 11 35	81 28	41 21 L	57 30 2	23 43	210 52 45	70	6	C.	R. 4	☽ à Antares.
	16 11 35	81 28	41 21	57 31 26		211 34 15		6	K.	R. 1	Do.
	16 11 35	81 28	41 21	57 31 20		211 31 15		6	B.	R. 3	Do.
	16 19 49	82 58	39 43	57 28 28		211 38 15		6	C.	R. 1	Do.
	16 19 49	82 58	39 43	57 27 30		211 9 15		6	K.	R. 4	Do.
	16 19 49	82 58	39 43	57 28 20		211 34 15		6	B	R. 3	Do.
	16 32 4	85 32	37 15	57 23 7		211 16 0		6	C.	D.	Do.
	16 32 4	85 32	37 15	57 23 5		211 15 0		6	K.	R. 2	Do.
	16 38 15	86 53	35 51	57 21 0		211 31 30		7	C.	R. 2	Do.
	16 38 15	86 53	35 51	57 21 6		211 25 30		7	K.	D.	Do.
☽——11.	11 25 27	47 1	34 56½ U	85 50 34	19 14½	211 19 30	77	6	C.	R. 4	☽ à Sun.
	11 25 27	47 1	34 56½	85 50 15		211 24 30		6	K.	R. 1	Do.
	11 25 27	47 1	34 56½	85 51 30		210 54 32		6	R.	R. 2	Do.
	11 34 13	45 44	36 59	85 53 55		210 57 15		6	C.	R. 1	Do.
	11 34 13	45 44	36 59	85 54 0		210 54 30		6	K.	R. 4	Do.
	11 50 41	43 6½	40 45	85 58 47		211 3 0		6	C.	D.	Do.
	11 50 41	43 6½	40 45	85 59 15		211 15 15		6	K.	R. 2	Do.
	11 56 13	42 11	42 6½	86 1 57		210 45 0		6	C.	R. 2	Do.
	11 56 13	42 11	42 6½	86 1 5		211 13 45		6	K.	D.	Do.
	16 23 49	30 51	73 3 L	72 26 39	19 9	211 12 30	77½	6	C.	R. 4	☽ à α Aquila.
	16 23 49	30 51	73 3	72 28 25		212 15 0		6	K.	R. 1	Do.
	16 43 4	34 42	69 2	72 26 10		212 37 0		6	C.	R. 1	Do.
	16 43 4	34 42	69 2	72 24 0		211 17 30		6	K.	R. 4	Do.
	16 43 4	34 42	69 2	72 25 30		212 13 0		6	B.	R. 3	Do.
♂ Dec. 9.	13 35 33	34 24	40 0 U	104 38 27	15 42	207 52 5	81½	6	C.	B.	☽ à Sun.
	13 35 33	34 24	40 0	104 39 52		207 12 45		6	K.	R. 1	Do.
	13 58 45	29 5½	45 24⅓	104 48 35		207 20 45		6	C.	D.	Do.
	13 58 45	29 5½	45 24⅓	104 49 5		207 6 53		6	K.	R. 1	Do.
	14 4 15	27 49	46 40	104 50 55		207 10 30		6	C.	R. 2	Do.
	14 4 15	27 49	46 40	104 50 27		207 33 0		6	K.	D.	Do.
♄——20.	6 58 55	40 13⅓	37 38	100 26 17	2 16	203 23 15	82¼	6	C.	B.	Do.
	6 58 55	40 13⅓	37 38	100 27 24		203 56 48		6	K.	R. 1	Do.
	7 3 51	41 16½	36 25½	100 26 6		204 12 15		6	C.	R. 1	Do.
	7 3 51	41 16½	36 25½	100 24 35		203 25 29		6	K.	B.	Do.
	7 17 20	44 9½	33 11⅔	100 18 30		202 50 30		6	C.	D.	Do.
	7 17 20	44 9½	33 11⅔	100 19 50		203 31 10		6	K.	R. 2	Do.
	7 21 7	44 57⅓	32 17½	100 19 10		203 54 30		6	C.	R. 2	Do.
	7 21 7	44 57⅓	32 17½	100 17 35		203 3 40		6	K.	D.	Do.
	7 35 10	47 51	28 58	100 13 10		203 32 0		6	C.	R. 4	Do.
	7 35 10	47 51	28 58	100 13 47		203 56 24		6	K.	R. 3	Do.
	7 40 0	48 52	27 49	100 10 55		203 16 30		6	C.	R. 3	Do.
	7 40 0	48 52	27 49	100 11 5		203 26 48		6	K.	R. 4	Do.
	8 12 11	55 16	20 10	99 56 35		203 0 0		6	C.	R. 5	Do.
	8 12 11	55 16	20 10	99 57 10		203 16 16		6	K.	R. 5	Do.

1777.	Time per Watch N° 1.	Altitude of the ☉'s L. L. or ✱.	Moon's Altitude.	Distance of the ☽'s Limb from the ☉'s or ✱.	Latitude of the Ship.	Longitude East of Greenwich.	Therm.	N° of Obs.	Observers.	Sextant used.	Objects.
	H. ′ ″	° ′	° ′	° ′ ″	° ′	° ′ ″	°				
♄ Dec. 20.	8 18 11	56 23	18 42½ U	99 55 7	2 16 S	203 39 30 E	82¾	6	C.	R. 5	☽ à Sun.
	8 18 11	56 23	18 42½	99 54 40		203 25 16		6	K.	C. 5	Do.
☉——21.	8 11 0	53 41	31 49	88 34 25	1 47	203 6 45	81½	6	C.	B.	Do.
	8 11 0	53 41	31 49	88 34 42		203 18 50		6	K.	R. 1	Do.
	8 15 16	54 26	30 47	88 33 10		203 31 15		6	C.	R. 1	Do.
	8 15 16	54 26	30 47	88 31 32		202 58 25		6	K.	B.	Do.
	8 31 30	57 26	26 54	88 26 15		202 51 15		6	C.	D.	Do.
	8 31 30	57 26	26 54	88 26 20		202 56 37		6	K.	R. 2	Do.
	8 35 10	58 5	25 58	88 25 19		203 5 45		4	C.	R. 2	Do.
	8 35 10	58 5	25 58	88 24 45		202 51 30		4	K.	D.	Do.
	8 46 14	59 54	23 18	88 19 42		202 30 0		6	C.	R 4	Do.
	8 46 14	59 54	23 18	88 19 45		202 31 36		6	K.	R. 3	Do.
	8 50 1	60 27	22 21½	88 17 57		202 12 45		6	C.	R. 3	Do.
	8 50 1	60 27	22 21½	88 18 17		202 36 55		6	K.	R. 4	Do.
☽——22.	9 27 9	63 40	23 49½	76 56 17	0 27 N	202 15 30	81	6	C.	B.	Do.
	9 27 9	63 40	23 49½	76 56 55		202 35 57		6	K.	R. 1	Do.
	9 31 43	64 2	22 45	76 55 12		202 39 45		6	C.	R. 1	Do.
	9 31 43	64 2	22 45	76 54 37		202 21 20		6	K.	B.	Do.
	9 45 35	65 0½	19 21	76 49 32		202 39 0		6	C.	D.	Do.
	9 45 35	65 0½	19 21	76 49 40		202 43 10		6	K.	R. 2	Do.
	9 49 16	65 8	18 28	76 48 23		202 52 0		6	C.	R. 2	Do.
	9 49 16	65 8	18 28	76 48 45		203 4 15		6	K.	D.	Do.
	10 1 12	65 34⅔	15 12	76 42 32		202 23 45		6	C.	R. 4	Do.
	10 1 12	65 34⅔	15 12	76 42 15		202 14 0		6	K.	R. 3	Do.
	10 4 42	65 36½	14 35	76 40 45		202 15 0		5	C.	R. 3	Do.
1778.	10 4 42	65 36½	14 35	76 41 30		202 46 40		5	K.	R. 4	Do.
Jan. 4.	17 21 28	56 35	45 32 L	80 9 12	4 8	203 17 30	80½	6	C.	B.	☽ à Aldebar.
	17 21 28	56 35	45 32	80 8 32		202 59 30		6	K.	R. 1	Do.
	17 28 53	56 58⅔	43 32	80 6 2		203 10 10		6	C.	R. 1	Do.
	17 28 53	56 58⅔	43 32	80 6 10		203 12 55		6	K.	B.	Do.
♂—— 6.	11 42 33	53 47	26 47 U	85 34 57	5 53	203 5 15	80¼	6	C.	B.	☽ à Sun.
	11 42 33	53 47	26 47	85 35 15		202 59 15		6	K.	R. 1	Do.
	11 48 13	52 55	28 9⅖	85 37 5		203 16 15		6	K.	B.	Do.
	11 57 1	51 31	30 16⅕	85 41 32		202 57 15		6	C.	R. 2	Do.
	11 57 1	51 31	30 16⅕	85 41 0		203 13 47		6	K.	D.	Do.
	12 2 3	50 40	31 29	85 43 45		202 55 15		6	C.	D.	Do.
	12 2 3	50 40	31 29	85 43 32		203 1 15		6	K.	R. 2	Do.
♃—— 8.	13 54 49	26 16	37 13⅔	112 55 57	7 40	204 35 30	80	6	C.	D.	Do.
	14 0 21	25 6	38 32	112 58 4		205 0 0		6	K.	D.	Do.
	14 11 12	22 34	41 9	113 2 25		204 42 0		6	C.	B.	Do.
	14 11 12	22 34	41 9	113 2 59		204 34 20		6	K.	R. 2	Do.
	14 15 49	21 43	42 17	113 5 10		204 19 45		6	C.	R. 2	Do.
	14 15 49	21 43	42 17	113 4 32		204 50 15		6	K.	B.	Do.
☉——18.	4 10 28	34 25	63 15 L	41 33 37		200 6 0	75	6	K.	D.	☽ à Regulus.
	4 15 15	33 19	62 30	41 34 27		200 8 1		6	K.	R. 2	Do.
	4 25 42	30 58	60 55	41 37 0		200 29 15		6	K.	R. 1	Do.
	4 31 12	29 45	60 6	41 38 11		200 43 15		6	K.	R. 3	Do.
	6 31 23	18 42	35 13½	109 34 32	21 37	200 48 0	76	6	C.	D.	☽ à Sun.
	6 31 23	18 42	35 13½	109 35 7		201 5 30		6	K.	R. 1	Do.
	6 35 58	19 40	33 54	109 34 27		201 48 45		6	C.	R. 1	Do.
	6 35 58	19 40	33 54	109 33 42		200 53 30		6	K.	D.	Do.
	6 51 10	22 30	30 47½	109 28 2		201 39 15		6	C.	B.	Do.

1778.	Time per Watch N° 1.	Altitude of the ☉'s L. L. or ✱.	Moon's Altitude.	Distance of the ☽'s Limb from the ☉'s or ✱.	Latitude of the Ship.	Longitude East of Greenwich.	Therm.	N° of Obs.	Observers.	Sextant used.	Objects.
	H. ′ ″	° ′	° ′	° ′ ″	° ′	° ′ ″	°				
☉ Jan. 18.	6 51 10	22 30	30 47½ L	109 28 0	21 37 N	201 35 15 E	76	6	K.	R. 1	☽ à Sun.
	6 55 44	23 23	29 45	109 27 12		201 34 15		6	C.	R. 2	Do.
	6 55 44	23 23	29 45	109 25 37		200 44 30		6	K.	B.	Do.
	7 11 22	26 15	26 15	109 20 44		201 26 30		6	C.	R. 4	Do.
	7 11 22	26 15	26 15	109 19 5		201 1 40		6	K.	R. 3	Do.
	7 15 51	27 4	25 13	109 18 35		200 57 30		6	C.	R. 3	Do.
	7 15 51	27 4	25 13	109 18 24		200 51 40		6	K.	R.	Do.
♂ —— 20.	7 22 17	28 2	37 26 U	87 1 55	21 56	200 6 0	75¾	6	K.	D.	Do.
	7 30 49	29 32	35 47	87 0 45		200 51 0		6	K.	R. 2	Do.
	7 37 32	30 41	34 34	86 58 27		200 51 30		6	K.	R. 1	Do.
	7 49 40	32 44½	31 56	86 54 55		200 46 0		6	K.	R. 3	Do.
	8 7 19	35 36	28 15	86 48 32		200 25 15		6	C.	B.	Do.
	8 24 41	38 14	24 33	86 42 0		200 2 15		6	C.	R. 4	Do.
☉ —— 25.	4 3 45	33 13	15 35 L	26 31 57	21 55½	199 17 45	75½	6	K.	R.	☽ à Antares.
	4 15 47	34 40	17 59	26 36 40		199 14 15		6	K.	R. 1	Do.
	4 24 47	35 53	19 24	26 42 30		199 6 45		2	K.	D.	Do.
☽ Feb. 2.	12 11 4	44 5	52 51 U	54 56 46	21 56½	199 43 0	77½	6	C.	D.	☽ à Sun.
	12 11 4	44 5	52 51	54 57 5		199 45 48		6	K.	R.	Do.
	12 15 55	43 27	53 41	54 59 2		199 39 15		6	C.	R. 1	Do.
	12 15 55	43 27	53 41	54 59 31		199 25 15		6	K.	D.	Do.
	12 29 15	41 37	56 4	55 5 7		198 46 30		6	C.	R. 4	Do.
	12 29 15	41 37	56 4	55 4 27		199 8 55		6	K.	R. 2	Do.
	12 34 7	40 52	56 57	55 8 55		199 12 0		6	C.	R. 2	Do.
	12 34 7	40 52	56 57	55 9 10		198 51 0		6	K.	R. 4	Do.
	17 17 11	79 14	40 1 L	56 3 41	21 59	200 17 30	76	6	C.	D.	☽ à Aldebar.
	17 17 11	79 14	40 1	56 3 19		200 17 40		6	K.	R. 1	Do.
	17 25 37	80 45	38 37	55 59 49		200 19 15		3	K.	D.	Do.
♂ —— 3.	12 5 31	43 57	44 21	67 58 17	23 16	199 51 30	76	6	C.	D.	☽ à Sun.
	12 5 31	43 57	44 21	67 58 42		199 40 24		6	K.	R. 1	Do.
	12 10 10	43 26	45 21	68 1 19		199 11 15		6	C.	R. 1	Do.
	12 10 10	43 26	45 21	68 0 57		199 21 25		6	K.	D.	Do.
	12 21 58	41 54	47 57	68 6 15		199 22 0		6	C.	R. 2	Do.
	12 21 58	41 54	47 57	68 5 22		199 50 40		6	K.	R. 1	Do.
	12 26 25	41 16	48 48	68 7 15		199 16 30		6	C.	R. 2	Do.
	12 26 25	41 16	48 48	68 8 0		198 58 10		6	K.	R. 1	Do.
☿ —— 4.	10 56 57	48 28	20 6	80 34 15	24 34	199 28 15	75	6	C.	D.	Do.
	10 56 57	48 28	20 6	80 34 15		199 52 15		6	K.	R. 1	Do.
	11 3 24	48 11½	21 30	80 37 52		199 30 45		6	C.	R. 1	Do.
	11 3 24	48 11½	21 30	80 36 52		199 46 45		6	K.	D.	Do.
	11 24 59	47 0	26 19	80 48 52		199 4 45		6	C.	R. 1	Do.
	11 24 59	47 0	26 19	80 48 37		199 12 45		6	K.	R. 2	Do.
	11 29 44	46 39	27 20	80 50 54		199 11 30		6	C.	R. 2	Do.
	11 29 44	46 39	27 20	80 50 57		199 14 10		6	K.	R. 4	Do.
♃ —— 5.	12 55 46	35 12	37 4 U	94 39 30	26 7½	199 55 0	75	6	K.	D.	Do.
	13 0 21	34 25	38 1	94 41 22		199 55 30		6	C.	D.	Do.
	13 0 21	34 25	38 1	94 42 22		199 25 30		6	K.	R. 1	Do.
	13 9 56	32 50	40 9	94 46 22		199 30 15		6	C.	R. 4	Do.
	13 9 56	32 50	40 9	94 46 15		199 33 45		6	K.	R. 2	Do.
	13 14 3	32 8	41 2	94 47 55		199 30 30		6	C.	R. 4	Do.
	13 14 3	32 8	41 2	94 48 32		199 15 40		6	K.	R. 2	Do.
	13 31 13	28 58	44 22	94 56 25		199 23 15		6	T.	R. 2	Do.
	13 31 13	28 58	44 22	94 55 12		199 43 0		6	P.	D.	Do.

1778.	Time per Watch N° 1.	Altitude of the ☉'s L. L. or ✱.	Moon's Altitude.	Distance of the ☽'s Limb from the ☉'s, or ✱.	Latitude of the Ship.	Longitude East of Greenwich.	Therm.	N° of Obs.	Observers.	Sextant used.	Objects.
	H. ′ ″	° ′	° ′	° ′ ″	° ′	° ′ ″	°				
♃ Feb. 5.	13 48 48	26 8	48 45 U	95 1 7	26 7½ N	199 56 12 E	75	6	B.	D.	☽ & Sun.
	13 48 48	26 8	48 45	95 2 8		199 24 15		6	G.	R. 3	Do.
♅ —— 18.	7 21 57	27 42	12 51	96 42 57	37 15	205 16 45	53½	6	C.	D.	Do.
	7 21 57	27 42	12 51	96 44 45		206 15 22		6	K.	R. 1	Do.
	7 26 33	28 13	12 24	96 43 0		206 16 15		6	C.	R. 1	Do.
	7 26 33	28 13	12 24	96 42 45		205 45 20		6	K.	D.	Do.
	7 37 25	29 48	10 23	96 39 34		206 54 45		6	C.	R. 1	Do.
	7 37 25	29 48	10 23	96 38 30		206 10 15		6	K.	D.	Do.
♃ —— 19.	7 1 56	25 17	19 1	86 1 50	37 59	207 27 30	56¼	8	C.	R. 4	Do.
	7 1 56	25 17	19 1	86 2 8		207 41 15		8	K.	D.	Do.
	7 1 56	25 17	19 1	86 3 17		208 19 42		8	B.	R. 3	Do.
	7 1 56	25 17	19 1	86 2 36		207 55 30		8	M.	R. 2	Do.
	7 16 51	27 28	16 57	85 56 57		207 33 15		6	C.	D.	Do.
	7 16 51	27 28	16 57	85 58 2		208 9 5		6	K.	R. 4	Do.
	7 16 51	27 28	16 57	85 56 57		207 33 15		6	M.	R. 3	Do.
	7 35 6	30 1	14 11	85 50 45		207 33 30		6	C.	B.	Do.
	7 35 6	30 1	14 11	85 50 52		207 36 22		6	K.	R. 1	Do.
	7 39 55	30 40⅓	13 27⅙	85 49 40		207 55 15		6	C.	R. 1	Do.
	7 39 55	30 40⅓	13 27⅙	85 48 55		207 30 30		6	K.	B.	Do.
	7 39 55	30 40⅓	13 27⅙	85 48 37		207 20 7		6	M.	C.	Do.
	7 49 24	31 52	11 59	85 46 30		208 5 30		6	C.	R. 2	Do.
	7 49 24	31 52	11 59	85 46 37		208 2 0		6	K.	R. 3	Do.
	7 49 24	31 52	11 59	85 46 35		208 8 15		6	B.	R. 1	Do.
	7 54 13	32 29	11 13	85 44 7		207 47 45		6	C.	R. 3	Do.
	7 54 13	32 29	11 13	85 44 12		207 45 30		6	K.	R. 2	Do.
	7 54 13	32 29	11 13	85 42 40		207 4 40		6	B.	C.	Do.
	8 4 11	33 24	9 39	85 39 55		207 28 32		6	T.	R. 3	Do.
	8 4 11	33 24	9 39	85 39 20		207 6 30		6	P.	R. 2	Do.
♄ —— 21.	5 44 24	15 8	26 26	64 30 47	40 5	212 36 15	57	6	C.	R. 4	Do.
	5 44 24	15 8	26 26	64 29 17		211 47 20		6	K.	D.	Do.
	5 49 3	15 56	26 16	64 27 45		211 36 35		6	C.	D.	Do.
	5 49 3	15 56	26 16	64 29 22		212 29 15		6	K.	R. 4	Do.
	6 3 22	18 16	25 43	64 23 50		211 37 0		6	C.	B.	Do.
	6 3 22	18 16	25 43	64 24 7		211 46 45		6	K.	R. 1	Do.
	6 7 51	18 59	25 30½	64 23 15		212 2 28		6	C.	R. 1	Do.
	6 7 51	18 59	25 30½	64 23 7		211 53 15		6	K.	B.	Do.
	6 15 54	20 17	25 8	64 20 25		211 40 0		6	C.	R. 3	Do.
	6 15 54	20 17	25 8	64 20 32		211 43 45		6	K.	B.	Do.
	6 20 9	19 57	24 53	64 20 5		212 6 45		6	C.	R. 2	Do.
	6 20 9	19 57	24 53	64 20 37		212 23 30		6	K.	R. 3	Do.
☉ —— 22.	6 12 29	21 24	25 1	53 9 9	40 48	214 53 0	56½	6	C.	B.	Do.
	6 12 29	21 24	25 1	53 8 52		214 44 15		6	K.	R. 1	Do.
	6 17 52	22 13	24 53	53 7 57		215 5 30		6	C.	R. 1	Do.
	6 17 52	22 13	24 53	53 7 2		214 39 0		6	K.	B.	Do.
	6 31 53	24 17	24 31	53 3 15		214 43 45		6	C.	R. 2	Do.
	6 31 53	24 17	24 31	53 3 12		214 42 20		6	K.	D.	Do.
	6 36 19	24 55	24 23	53 2 37		215 5 45		6	C.	D.	Do.
	6 36 19	24 55	24 23	53 2 2		214 47 0		6	K.	R. 2	Do.
	6 53 21	27 17	23 42	52 58 17		215 32 30		6	C.	R. 4	Do.
	6 53 21	27 17	23 42	52 58 5		215 22 30		6	K.	R. 3	Do.
	6 57 48	27 51	23 27	52 56 20		215 12 15		6	C.	R. 3	Do.
	6 57 48	27 51	23 27	52 56 35		215 20 45		6	K.	R. 4	Do.

1778.	Time per Watch No.	Altitude of the ☉'s L. L. or ✱.	Moon's Altitude.	Distance of the ☽'s Limb from the ☉'s, or ✱.	Latitude of the Ship.	Longitude East of Greenwich.	Therm.	N° of Obs.	Observers.	Sextant used.	Objects.
	H. ′ ″	° ′	° ′	° ′ ″	° ′	° ′ ″	°				
♀ March 4.	8 47 24	38 45	34 36½ L	61 51 47	44 5 S	229 46 30 E	47¾	6	C.	R. 4	☽ à Sun.
	8 47 24	38 45	44 36½	61 50 25		230 23 45		6	K.	R. 1	Do.
	8 53 48	38 35	35 34	61 52 40		230 29 0		6	C.	R. 1	Do.
	8 53 48	38 35	35 34	61 53 50		229 58 0		6	K.	R. 4	Do.
	9 6 45	38 8	37 24	61 57 55		230 58 15		6	C.	D.	Do.
	9 6 45	38 8	37 24	61 58 7		230 52 15		6	K.	R. 2	Do.
	9 9 1	38 1	37 49	61 59 30		230 42 30		2	C.	R. 2	Do.
	9 9 1	38 1	37 49	62 0 15		231 3 0		2	C.	D.	Do.
♄ —— 7.	11 3 19	22 57	38 49 U	102 32 50	44 33	235 13 0	56	6	.	D.	Do.
	11 3 19	22 57	38 49	102 32 57		235 9 15		6	K.	R. 2	Do.
	11 7 29	25 22	39 34	102 35 17		235 4 0		6	C.	R. 2	Do.
	11 7 29	25 22	39 34	102 34 52		235 6 0		6	K.	B.	Do.
	11 21 33	23 22	41 56	102 41 32		234 44 45		6	C.	B.	Do.
	11 21 33	23 22	41 56	102 40 27		235 15 0		6	K.	R. 1	Do.
	11 26 6	22 42	42 44	102 44 5		234 33 30		6	C.	R. 1	Do.
	11 26 6	22 42	42 44	102 44 25		234 22 15		6	K	B.	Do.
	11 40 18	20 34½	45 8½	102 50 2		234 29 45		6	C.	R. 4	Do.
	11 40 18	20 34½	45 8½	102 49 7		234 54 15		6	K.	R. 3	Do.
	11 44 27	19 56	45 52	102 51 55		234 38 15		6	C.	R. 3	Do.
	11 44 27	19 56	45 52	102 51 37		234 55 15		6	K.	R. 4	Do.
	11 58 45	17 41	48 16	102 57 27		234 29 15		6	T.	R. 1	Do.
	11 58 45	17 41	48 16	102 57 30		234 36 0		6	Ta.	R. 2	Do.
	11 58 45	17 41	48 16	102 56 58		234 43 0		6	P.	D.	Do.
☉ —— 8.	11 14 26	25 8	30 44	115 35 35	44 27⅓	234 48 30	47⅓	6	C.	B.	Do.
	11 14 26	25 8	30 44	115 35 11		235 0 0		6	K.	R. 2	Do.
	11 19 49	24 15	31 40½	115 39 1		234 23 30		6	C.	R. 2	Do.
	11 19 49	24 15	31 40½	115 38 47		234 30 0		6	K.	B.	Do.
	11 40 7	21 13⅓	35 13	115 45 57		235 21 30		6	C.	D.	Do.
	11 40 7	21 13⅓	35 13	115 45 45		235 25 0		6	K.	R. 1	Do.
	11 45 6	20 27	36 6	115 50 25		234 44 0		6	K.	R. 1	Do.
	11 45 6	20 27	36 6	115 48 15		235 17 30		6	K.	D.	Do.
	11 57 56	18 22	38 19½	115 53 0		235 42 45		6	C.	R. 4	Do.
	11 57 56	18 22	38 19½	115 53 10		235 27 45		6	K.	R. 3	Do.
♃ —— 21.	23 41 29	24 8	11 9 L	72 59 5	46 20	234 40 30	50	6	K.	D.	☽ à Spica Virg.
	23 51 32	23 1	12 7	73 3 27		234 19 0		6	K.	R. 1	Do.
	0 2 2	21 36	12 58	73 6 57		234 32 0		6	K.	R. 1	Do.
	0 11 40	17 14	13 41½	27 32 25		234 32 45		6	K.	D.	☽ à Antares.
	0 20 11	17 12	14 26	27 35 4		234 8 0		6	C.	R. 1	Do.
	0 38 18	17 0	15 42	27 39 27		234 42 45		6	K.	R. 1	Do.
	3 54 54	19 5	15 56	85 37 15	47 4	234 57 0	55	6	K.	R. 4	☽ à Sun.
	3 54 54	19 5	15 56	85 37 10		234 54 0		6	K.	R.	Do.
	3 59 10	19 47	15 28	85 36 22		235 12 30		6	C	R. 1	Do.
	3 59 10	19 47	15 28	85 37 0		235 34 0		6	K	R. 4	Do.
	4 9 46	21 25	14 56	85 33 44		235 46 45		6	C.	R. 2	Do.
	4 9 46	21 25	14 56	85 33 12		235 29 45		6	K.	D.	Do.
	4 16 42	22 29	14 24	85 30 27		235 6 0		6	C.	D.	Do.
	4 16 42	22 29	14 24	85 31 3		235 25 45		6	K.	R. 2	Do.
	4 29 59	4 26	13 20	85 26 0		235 33 45		6	C.	B.	Do.
	4 29 59	4 26	13 20	85 26 34		235 38 0		6	K.	R. 3	Do.
☽ —— 23.	4 53 51	7 48	18 50 U	62 36 0	47 28	233 37 0	48¼	6	C.	D.	Do.
	4 53 51	7 48	18 50	62 36 10		233 42 15		6	K.	R. 1	Do.
	4 58 4	8 28¼	18 17½	62 34 35		233 43 30		6	C.	R. 1	Do.

1778.	Time per Watch N° 1.	Altitude of the ☉'s L. L. or ✱.	Moon's Altitude.	Distance of ☽'s Limb from the ☉'s, or ✱.	Latitude of the Ship.	Longitude East of Greenwich.	Therm.	N° of Obs.	Observer.	Sextant used.	Objects.
	H. ′ ″	° ′	° ′	° ′ ″	° ′	° ′ ″	°				
☽ Mar. 23.	4 58 45	28 28½	18 41½ U	62 34 27	47 28 S	233 40 0 E	48¾	6	B.	K.	☽ à Sun.
♀ May 1.	9 49 14	46 54¾	48 18	54 6 19	54 43	225 9 30	60	12	C.	B.	Do.
	9 49 14	46 54¾	48 18	54 6 53		224 54 0		12	K.	R. 1	Do.
	9 55 58	46 28	49 8	54 10 40		224 31 0		6	C.	R. 1	Do.
	9 55 58	46 28	49 8	54 10 2		224 49 30		6	K.	B.	Do.
	10 4 3	45 50	50 5	54 14 35		224 24 30		6	C.	R. 4	Do.
	10 4 3	45 50	50 5	54 14 15		224 31 45		6	K.	D.	Do.
	10 8 17	45 29	50 32	54 15 50		224 41 30		6	C.	D.	Do.
	10 8 17	45 29	50 32	54 16 35		225 1 30		6	K.	R. 4	Do.
	7 38 50	47 28	16 48 Ctr	66 31 40	56 32	223 31 45	55	6	C.	B.	Do.
	7 38 50	47 28	16 48	66 31 5		223 45 0		6	K.	R. 1	Do.
	7 41 31	47 33	17 29	66 33 42		223 23 0		6	C.	R. 1	Do.
	7 41 31	47 33	17 29	66 33 52		223 18 30		6	K.	B.	Do.
	8 22 14	48 22⅙	25 27	66 53 10		223 32 0		6	C.	R. 4	Do.
	8 22 14	48 22⅙	25 27	66 52 17		223 49 0		6	K.	D.	Do.
♄ —— 2.	13 9 34	23 48	56 3 U	68 59 55	56 50	223 21 ~~15~~	48¾	6	C.	R. 1	Do.
	13 9 34	23 48	56 3	68 59 22		223 36 0		6	K.	D.	Do.
	13 14 32	23 6	56 12	69 0 52		223 41 45		6	C.	D.	Do.
	13 14 32	23 6	56 12	69 1 12		223 32 30		6	K.	R. 1	Do.
	13 28 26	21 13	56 17	69 7 54		223 13 30		6	C.	R. 4	Do.
	13 28 26	21 13	56 17	69 7 15		223 20 30		6	K.	B.	Do.
	13 32 5	20 35	56 15	69 8 37		223 23 0		6	C.	B.	Do.
	13 32 5	20 35	56 15	69 8 7		223 20 30		6	K.	R. 4	Do.
☽ —— 4.	11 43 7	35 52	33 53	94 4 40	58 33	220 41 15	62	6	C.	R. 4	Do.
	11 43 7	35 52	33 53	94 5 20		220 46 15		6	K.	D.	Do.
	11 47 31	35 27	34 22	94 7 7		220 51 15		6	C.	D.	Do.
	11 47 31	35 27	34 22	94 8 7		220 21 30		6	K.	R. 4	Do.
	12 3 38	33 41½	36 6	94 14 17		220 35 15		6	C.	B.	Do.
	12 3 38	33 41½	36 6	94 13 57		220 38 45		6	K.	R. 1	Do.
	12 7 15	33 15	36 31	94 15 47		220 31 0		6	C.	R. 1	Do.
	12 7 15	33 15	36 31	94 16 2		220 27 30		6	K.	B.	Do.
	12 19 17	31 39½	37 55	94 21 54		220 14 30		5	Ta.	R. 3	Do.
	12 19 17	31 39½	37 55	94 21 30		220 14 30		5	T.	C.	Do.
	12 19 17	31 39½	37 55	94 20 36		220 48 30		5	P.	R. 1	Do.
	12 24 49	30 59	38 33	94 24 33		220 4 30		5	Ta.	R. 3	Do.
	12 24 49	30 59	38 33	94 24 24		220 38 30		5	T.	C.	Do.
	12 24 49	30 59	38 33	94 23 0		220 50 15		5	P.	R. 1	Do.
	12 34 15	29 54	39 33	94 26 50		220 45 30		6	G.	C.	Do.
	12 34 15	29 54	39 33	94 28 20		220 5 45		6	R.	R. 1	Do.
	12 45 31	28 29½	40 40	94 32 32		220 20 15		6	G.	R. 1	Do.
	12 45 31	28 29½	40 40	94 31 20		220 56 0		6	R.	C.	Do.
	12 45 31	28 29½	40 40	94 31 30		220 50 45		6	P.	R. 3	Do.
	12 55 57	27 11	41 41	94 36 57		220 17 30		6	Ta	R. 1	Do.
♂ —— 6.	18 29 14	20 27	38 3	34 14 29	59 9	221 12 0	60	6	C.	B.	☽ à Spica Virg.
	18 29 14	20 27	38 3	34 12 30		221 13 30		6	K.	R. 1	Do.
	18 34 44	20 34	37 41	34 10 30		220 20 30		6	C.	R. 1	Do.
	18 34 44	20 34	37 41	34 11 45		220 56 15		6	K.	B.	Do.
	18 42 19	33 55	37 7	20 44 25		220 47 0		6	C.	B.	☽ à Regulus.
	18 42 19	33 55	37 7	20 45 17		220 39 0		6	K.	R. 1	Do.
	18 49 9	33 15	36 36	20 47 45		220 52 0		6	C.	R.	Do.
	18 49 9	33 15	36 36	20 47 10		221 8 45		6	K.	B.	Do.
	19 0 37	20 56⅓	35 55	34 0 13		220 9 0		6	C.	R. 4	☽ à Spica Virg.

1778.	Time per Watch.	Altitude of the ☉'s L. L. or ✳.	Moon's Altitude.	Distance of the ☽'s Limb from the ☉'s or ✳.	Latitude of the Ship.	Longitude East of Greenwich.	Therm.	N° of Obs.	Observers.	Sextant used.	Objects.
	H. ′ ″	° ′	° ′	° ′ ″	° ′	° ′ ″	°				
☿ May 6.	19 0 37	20 56⅔	35 55 U	34 0 57	59 9 S	220 38 0 E	60	6	K.	D.	☽ à Spica Virg.
	19 6 7	20 57	35 32	33 59 25		221 21 45		6	C.	D.	Do.
	19 6 7	20 57	35 32	33 57 26		220 26 45		6	K.	R. 1	Do.
	19 13 32	30 41	35 1	20 58 26		220 29 30		6	C.	R. 4	☽ à Regulus.
	19 13 32	30 41	35 1	20 58 57		220 19 15		6	K.	D.	Do.
	19 19 56	29 55½	34 32½	21 1 20		220 44 45		6	C.	D.	Do.
	19 19 56	29 55½	34 32½	21 1 22		220 44 45		6	K.	R. 4	Do.
♄ —— 9.	19 24 33	29 26½	24 32	58 7 15	59 30	216 6 0	62½	6	K	R. 1	Do.
	19 32 57	28 33	24 30	58 10 40		226 27 45		6	K.	D.	Do.
☿ —— 20.	4 27 7	27 20	18 38	76 27 50	59 39	211 17 15	42	6	C.	D.	☽ à Sun.
	4 27 7	27 20	18 38	76 27 50		211 17 15		6	K.	R. 1	Do.
	4 31 18	25 53	18 48	76 26 50		211 37 15		6	C.	R. 1	Do.
	4 31 18	25 53	18 48	76 26 15		211 20 15		6	K.	D.	Do.
	4 50 10	28 13½	18 39	76 18 17		211 10 0		6	C.	B.	Do.
	4 50 10	28 13½	18 39	76 19 0		211 33 30		6	K.	R. 4	Do.
	4 53 54	28 45	18 35	76 17 25		211 23 0		6	C.	R. 1	Do.
	4 53 54	28 45	18 35	76 16 25		210 58 30		6	K.	B.	Do.
♀ —— 22.	4 38 59	26 16	27 3	50 34 47	59 0	208 49 30	52	6	C.	B.	Do.
	4 38 59	26 16	27 3	50 34 18		208 34 30		6	K.	R. 1	Do.
	4 43 30	26 47	27 18⅔	50 32 10		208 34 45		6	C.	R. 1	Do.
	4 43 30	26 47	27 18⅔	50 32 30		208 48 0		6	K.	B.	Do.
	5 4 1	29 25	28 26	50 24 40		209 18 30		6	C.	R. 4	Do.
	5 4 1	29 25	28 26	50 23 18		208 39 45		6	K.	D.	Do.
	5 8 43	30 0⅓	28 42	50 21 20		208 46 30		6	C.	D.	Do.
	5 8 43	30 0⅓	28 42	50 22 37		209 12 30		6	K.	R. 4	Do.
♀ June 5.	14 41 16	25 54	15 41	55 7 35	59 50¾	209 47 30	45½	6	K.	D.	Do.
	15 24 12	20 31	19 30	54 48 55		209 37 30		6	K.	D.	Do.
	15 28 55	19 51	19 53⅓ L	54 46 40		209 23 0		6	K.	D.	Do.
	15 56 15	16 27	21 29	54 36 25		209 57 0		12	C.	D.	Do.
	16 3 37	15 35	22 23	54 33 5		209 47 0		6	C.	D.	Do.
♀ —— 12.	21 55 54	5 40	5 51½ U	39 59 10	56 54½	206 1 0	43	6	K.	D.	☽ à Antares.
	22 2 36	5 25	6 12	40 1 35		205 56 0		6	K.	D.	Do.
♂ —— 16.	3 35 15	15 19	20 48	106 18 52	55 54	202 29 15	57	6	C.	B.	☽ à Sun.
	3 35 15	15 19	20 48	106 17 34		201 50 45		6	K.	R. 1	Do.
	3 40 30	16 2	20 45	106 15 52		201 50 30		6	C.	R. 1	Do.
	3 40 30	16 2	20 45	106 16 44		202 17 0		6	K.	B.	Do.
	3 50 51	18 29⅔	20 18	106 8 45		201 42 0		6	C.	R. 4	Do.
	3 50 51	18 29⅔	20 18	106 8 17		201 28 30		6	K.	D.	Do.
	4 3 53	19 14⅓	20 13	106 7 0		201 47 0		6	C.	D.	Do.
	4 3 53	19 14⅓	20 13	106 8 3		201 48 0		6	K.	R. 4	Do.
	4 13 10	20 36⅕	19 58½	106 3 57		201 51 15		6	C.	C.	Do.
	4 13 10	20 36⅕	19 58½	106 4 10		201 57 15		6	K.	R. 3	Do.
	4 18 5	21 17¼	19 49	106 3 52		201 55 30		6	C.	R. 3	Do.
	4 18 5	21 17¼	19 49	106 2 7		201 39 0		6	K.	C.	Do.
☿ —— 17.	6 58 27	43 21	17 8	92 43 37	55 24⅔	201 23 30	55½	6	C.	B.	Do.
	6 58 27	43 21	17 8	92 42 37		201 8 30		6	K.	R. 1	Do.
	7 2 20	43 51	16 46½	92 41 14		201 6 30		6	C.	R. 1	Do.
	7 2 20	43 51	16 46½	92 41 10		201 3 45		6	K.	B.	Do.
	7 21 21	46 19	14 51	92 33 5		201 21 30		6	C.	R. 6	Do.
	7 21 21	46 19	14 51	92 32 45		201 7 0		6	K.	D.	Do.
	7 25 9	46 42	15 23	92 31 40		201 20 0		6	C.	D.	Do.
	7 25 9	46 42	15 23	92 32 5		201 40 0		6	K.	R. 4	Do.

1778.	Time per Watch.	Altitude of the ☉'s L. L. or ✱.	Moon's Altitude.	Distance of the ☽'s Limb from the ☉'s or ✱.	Latitude of the Ship.	Longitude East of Greenwich.	Therm.	N° of Obs.	Observers.	Sextant used.	Objects.
	H. ′ ″	° ′	° ′	° ′ ″	° ′	° ′ ″	°				
♄ May 20.	7 48 59	48 27	42 57 U	53 9 22	59 22 S	197 5 45 E	54	6	C.	B.	☽ à Sun.
	7 48 59	48 27	42 57	53 9 54		197 42 30		6	K.	R.	Do.
	7 52 32	48 50½	42 40½	53 8 39		197 32 30		6	C.	R. 1	Do.
	7 52 32	48 50½	42 40½	53 7 57		197 13 0		6	K.	B.	Do.
	8 10 11	50 52	41 37½	53 2 20		198 9 30		6	C.	R. 4	Do.
	8 10 11	50 52	41 37½	53 1 33		197 46 15		6	K.	D.	Do.
	8 14 58	51 24	41 18½	52 59 28		197 20 0		6	C.	D.	Do.
	8 14 58	51 24	41 18½	53 0 45		198 7 15		6	K.	R. 4	Do.
	8 29 14	52 56½	40 16½	52 52 35		197 31 30		6	C.	C.	Do.
	8 29 14	52 56½	40 16½	52 52 45		197 33 45		6	K.	R. 3	Do.
	8 33 49	53 26	39 55½	52 49 57		197 40 15		6	C.	R. 3	Do.
	8 33 49	53 26	39 55½	52 50 26		197 12 15		6	K.	C.	Do.
	8 52 0	54 58	38 15	52 42 50		197 42 0		6	T.	C.	Do.
	8 52 0	54 58	38 15	52 44 7		197 16 15		6	Ta.	R. 4	Do.
	8 52 0	54 58	38 15	52 42 42		197 36 30		6	G.	R. 1	Do.
	8 52 0	44 58	38 15	52 41 23		197 6 15		6	P.	D.	Do.
	9 0 59	55 43	37 27	52 35 43		196 5 15		6	T.	B.	Do.
	9 0 59	55 43	37 27	52 38 20		197 37 15		6	Ta.	R. 4	Do.
	9 0 59	55 43	37 27	52 38 39		197 39 0		6	G.	R. 1	Do.
	9 0 59	55 43	37 27	52 38 55		197 45 45		6	P.	C.	Do.
♂ ——30.	16 1 41	23 14	43 38 Cr.	72 52 55	53 55	192 41 45	58½	6	C.	B.	Do.
	16 1 41	23 14	43 38	72 52 45		193 24 15		6	K.	R. 1	Do.
	16 5 38	22 40	43 35	72 54 7		193 10 15		6	C.	R. 1	Do.
	16 5 38	22 40	43 35	72 53 55		192 52 45		6	K.	B.	Do.
	16 22 2	20 17	43 7	73 3 10		193 5 0		6	C.	R. 4	Do.
	16 22 2	20 17	43 7	73 1 0		193 20 0		6	K.	D.	Do.
	16 25 28	19 47	43 0	73 1 50		193 48 0		6	C	D.	Do.
	16 25 28	19 47	43 0	73 3 45		193 25 30		6	K.	R. 4	Do.
☿ July 15.	4 49 3	22 17⅔	23 17¼ U	110 8 32	58 23	197 40 15	59	6	C.	D.	Do.
	4 49 3	22 17⅔	23 17¼	110 9 10		197 58 54		6	K.	R. 1	Do.
	4 52 54	22 47	23 9	110 8 20		198 19 30		6	C.	R. 1	Do.
	4 52 54	22 47	23 9	110 7 20		197 49 45		6	K.	D.	Do.
	5 10 16	25 6	21 56	110 1 20	50 23	198 23 30	69	6	C.	B.	Do.
	5 10 16	25 6	21 56	110 0 35		198 1 25		6	K.	R. 4	Do.
	5 18 28	26 11	21 19⅔	109 55 57		197 31 45		6	C.	R. 4	Do.
	5 18 28	26 11	21 19⅔	109 57 27		198 16 0		6	K.	B.	Do.
♃ ——16.	5 32 21	27 29	28 43	97 14 8	58 49	197 55 15	53	6	C.	B.	Do.
	5 32 21	27 29	28 43	97 14 20		198 3 15		6	K.	R. 1	Do.
	5 36 39	27 16	28 28½	97 12 30		198 3 45		6	C.	R. 1	Do.
	5 36 39	27 16	28 28½	97 12 22		197 42 45		6	K.	B.	Do.
	6 0 55	31 14	26 59	97 1 5		197 58 15		6	C.	R. 4	Do.
	6 0 55	31 14	26 59	97 1 45		197 58 15		6	K.	D	Do.
	6 5 8	31 45	26 38	97 0 47		198 15 45		6	C.	D.	Do.
	6 5 8	31 45	26 38	97 59 45		197 46 30		6	K.	R. 2	Do.
♀ ——17.	5 53 1	29 43	35 5½	84 8 20	58 54	197 43 0	60	6	C.	D.	Do.
	5 53 1	29 43	35 5½	84 8 0		197 32 50		6	K.	R. 1	Do.
	5 57 12	30 11⅔	34 52½	84 6 12		197 33 0		6	C.	R. 1	Do.
	5 57 12	30 11⅔	34 52½	84 6 2[illegible]		197 39 40		6	K.	D.	Do.
	7 16 44	39 42	29 47	83 31 18		197 35 30		6	C.	B.	Do.
	7 16 44	39 42	29 47	83 32 5		197 56 15		6	K.	R. 4	Do.
	7 20 13	40 5	29 27⅔	83 29 55		197 40 15		6	C.	R. 4	Do.
	7 20 13	40 5	29 27⅔	83 29 13		197 21 45		6	K.	B.	Do.

At anchor in Samgonoda harbour.

1778.	Time per Watch N° 1.	Altitude of the ☉'s L. L. or ✱.	Moon's Altitude.	Distance of the ☽'s Limb from the ☉'s, or ✱.	Latitude of the Ship.	Longitude East of Greenwich.	Therm.	N° of Obs.	Observers.	Sextant used.	Objects.
	H. ′ ″	° ′	° ′	° ′ ″	° ′	° ′ ″	°				
♀ July 17.	7 49 40	43 22	26 24½ U	83 17 20	58 34 N	198 1 45 E	60	6	T.	R. 3	☽ à Sun.
	7 49 40	43 22	26 24½	83 17 25		198 4 0		6	G.	R. 1	Do.
	7 49 40	43 22	26 24½	83 17 50		198 15 15		6	P.	D.	Do.
	7 49 40	43 22	26 24½	83 17 30		198 6 15		6	Ta	R. 4	Do.
	7 58 18	44 11⅔	25 31	83 13 7		198 1 0		6	T.	R. 1	Do.
	7 58 18	44 11⅔	25 31	83 13 40		198 15 15		6	G.	D.	Do.
	7 58 18	44 11⅔	25 31	83 12 35		198 46 30		6	P.	R. 3	Do.
	7 58 18	44 11⅔	25 31	83 13 27		198 9 45		6	Ta.	R. 4	Do.
	8 8 39	45 10	24 24⅓	83 8 0		197 49 30		6	T.	D.	Do.
	8 8 39	45 10	24 24⅓	83 7 57		197 48 15		6	G.	R. 3	Do.
	8 8 39	45 10	24 24⅓	83 8 57		198 4 45		6	Ta.	R. 4	Do.
♄ —— 18.	8 22 19	46 15	33 52½	69 46 0	59 38	197 46 15	64	6	M.	R. 3	Do.
	8 22 19	46 15	33 52½	69 46 3		197 46 30		6	K.	R. 1	Do.
	8 22 19	46 15	33 52½	69 46 0		197 59 15		6	G.	C.	Do.
	8 22 19	46 15	33 52½	69 45 42		197 46 15		6	P.	R. 4	Do.
	8 29 36	46 50⅔	32 7⅓	69 42 30		197 49 0		6	M.	D.	Do.
	8 29 36	46 50⅔	32 7⅓	69 42 27		197 47 45		6	K.	R. 3	Do.
	8 29 36	46 50⅔	32 7⅓	69 42 25		197 46 45		6	P.	C.	Do.
	8 48 47	48 14⅙	31 10½	69 33 15		197 46 0		6	M.	R. 4	Do.
	8 48 47	48 14⅙	31 10½	69 32 37		197 29 0		6	K.	R. 4	Do.
	8 48 47	48 14⅙	31 10½	69 32 25		197 23 30		6	G	R. 3	Do.
	8 48 47	48 14⅙	31 10½	69 32 35		197 28 0		6	T.	C.	Do.
	8 55 27	48 42⅙	30 27⅓	69 29 20		197 24 0		6	M.	D.	Do.
	8 55 27	48 42⅙	30 27⅓	69 30 5		197 43 30		6	K.	R. 4	Do.
	8 55 27	48 42⅙	30 27⅓	69 30 7		197 44 30		6	T.	R. 3	Do.
	8 55 27	48 42⅙	30 27⅓	69 30 25		197 51 45		6	G.	C.	Do.
	8 55 27	48 42⅙	30 27⅓	69 30 30		197 55 15		6	Ta.	R. 1	Do.
	9 16 4	49 51⅙	27 0	69 19 15		197 14 45		6	M.	C.	Do.
	9 16 4	49 51⅙	27 0	69 19 27		197 21 30		6	K.	B.	Do.
	9 16 4	49 51⅙	27 0	69 21 13		198 13 30		6	T.	R. 1	Do.
	9 16 4	49 51⅙	27 0	69 20 45		198 0 0		6	C.	R. 4	Do.
	9 16 4	49 51⅙	27 0	69 19 37		197 26 0		6	Ta.	R. 1	Do.
☉ —— 19.	7 37 17	41 43⅔	45 23	56 30 17	59 37	197 23 45	60	6	C.	B.	Do.
	7 37 17	41 43⅔	45 23	56 30 55		197 40 45		6	K.	R. 1	Do.
	7 31 17	41 43⅔	45 23	56 32 32		198 22 15		6	P.	R. 4	Do.
	7 41 46	42 15⅔	45 26	56 29 30		197 53 30		6	C.	R. 1	Do.
	7 41 46	42 15⅔	45 26	56 28 10		197 18 0		6	K.	B.	Do.
	7 41 46	42 15⅔	45 26	56 30 20		198 16 0		6	P.	R. 4	Do.
	7 57 25	43 41⅓	44 9½	56 22 42		198 3 0		6	C.	R. 4	Do.
	7 57 25	43 41⅓	44 9½	56 21 23		197 27 45		6	K.	D.	Do.
	7 57 25	43 41⅓	44 9½	56 22 0		198 11 15		6	G.	R. 1	Do.
	8 2 0	44 6½	43 45	56 19 13		197 23 45		6	C.	D.	Do.
	8 2 0	44 6½	43 45	56 20 20		197 53 30		6	K.	R. 4	Do.
	8 2 0	44 6½	43 45	56 20 50		198 7 15		6	P.	R. 1	Do.
☽ —— 27.	10 36 0	48 55½	21 46⅙	52 16 30	59 40	190 21 15	52½	6	C.	R. 4	Do.
	10 36 0	48 55½	21 46⅙	52 16 22		190 30 45		6	K.	D.	Do.
	10 36 0	48 55½	21 46⅙	52 17 5		190 3 0		6	R.	R. 1	Do.
	10 40 5	48 56	22 12½	52 18 2		190 29 15		6	C.	D.	Do.
	10 40 5	48 56	22 12½	52 0 0		190 9 45		6	K.	R. 4	Do.
	10 40 5	48 56	22 12½	52 0 0		190 4 45		6	R.	R. 1	Do.
♂ —— 28.	10 53 57	48 52⅔	23 32⅓	52 23 0	59 55½	191 4 0	55	6	C.	B.	Do.
	10 53 57	48 52⅔	23 32⅓	52 24 2		190 29 0		6	K.	R. 1	Do.

1778.	Time per Watch N° 1.	Altitude of the ☉'s L. L. or ✱.	Moon's Altitude.	Distance of ☽'s Limb from the ☉'s or a ✱.	Latitude of the Ship.	Longitude East of Greenwich.	Therm.	N° of Obs.	Observer.	Sextant used.	Objects.
	H. ′ ″	° ′	° ′	° ′ ″	° ′	° ′ ″	°				
♂ July 28.	11 0 51	48 48½	24 15⅙ U	52 27 47	59 55½ N	190 8 15 E	55	6	C.	R. 1	☽ à Sun.
	11 0 51	48 48½	24 15⅙	52 26 39		190 42 40		6	K.	B.	Do.
	11 0 51	48 48½	24 15⅙	52 27 12		190 26 0		6	R.	R. 4	Do.
☉ Aug. 16.	9 28 41	32 26	27 9	71 55 45	70 20	197 6 0	58½	6	C.	R. 4	Do.
	9 28 41	32 26	27 9	71 56 30		197 22 0		6	K.	R. 1	Do.
	9 28 41	32 26	27 9	71 55 45		197 1 20		6	B.	R. 3	Do.
	9 36 49	32 36	26 32	70 51 0		196 48 15		6	C.	R. 4	Do.
	9 36 49	32 36	26 32	71 52 30		197 24 45		6	K.	R. 1	Do.
	9 36 49	32 36	26 32	71 51 15		197 11 0		6	B.	R. 3	Do.
	9 42 23	32 41½	26 5	71 49 25		197 6 30		6	C.	R. 4	Do.
	9 42 23	32 41½	26 5	71 49 15		197 15 45		6	K.	R. 1	Do.
	9 42 23	32 41½	26 5	71 48 15		196 55 0		6	B.	R. 3	Do.
	9 53 35	32 47	25 14	71 41 2		196 31 30		6	C.	R. 4	Do.
	9 53 35	32 47	25 14	71 42 30		196 54 30		6	K.	R. 1	Do.
	9 53 35	32 47	25 14	71 41 45		196 45 45		6	B.	R. 3	Do.
	10 8 49	32 50	24 2½	71 34 10		196 43 30		4	C.	R. 1	Do.
	10 8 49	32 50	24 2½	71 34 45		196 59 30		4	K.	R. 2	Do.
☉ Sept. 6.	20 33 16	28 3	9 25⅙	59 2 52	63 58	194 15 15	59	6	K.	R. 1	☽ à α Arietis.
	20 34 25	29 14	9 56	58 57 45		194 24 0		6	C.	R. 1	Do.
	20 34 25	29 14	9 56	58 56 15		193 57 0		6	K.	D.	Do.
	20 50 5	31 0	10 36⅔	58 51 27		194 43 30		6	C.	R. 4	Do.
	20 50 52	31 0	10 36⅔	58 51 8		194 30 0		6	K.	R. 1	Do.
	20 57 45	31 42	10 49	58 45 42		193 32 30		6	C.	R. 1	Do.
	20 57 45	31 42	10 49	58 47 57		194 9 30		6	K.	R. 4	Do.
	20 48 12	30 4	10 14	58 54 5		194 45 0		6	C.	D.	Do.
	20 48 12	30 4	10 14	58 53 45		194 37 15		6	K.	R. 3	Do.
	21 30 25	35 2	11 36⅔	58 32 55		194 12 30		6	K.	D.	Do.
☽ —— 7.	19 34 53	23 40	8 25⅙	46 9 36	64 21	194 36 45	61½	6	C.	B.	Do.
	19 34 53	23 40	8 25⅙	46 9 48		194 39 0		6	K.	R. 1	Do.
	19 42 27	24 24	8 55	46 6 50		194 54 45		6	C.	R. 1	Do.
	19 42 27	24 24	8 55	46 6 50		194 56 0		6	K.	B.	Do.
	19 53 1	25 33	9 48½	46 3 55		195 44 30		6	C.	R. 4	Do.
	19 53 1	25 33	9 48½	46 2 30		194 57 45		6	K.	D.	Do.
	19 58 45	26 16	9 9	45 58 25		194 19 45		6	C.	D.	Do.
	19 58 45	26 16	9 9	45 59 7		194 41 15		6	K.	R. 4	Do.
♃ —— 10.	0 30 30	34 58	33 48 Cr.	31 15 5	64 27	197 17 45	63	6	C.	D.	☽ à Aldebar.
	0 30 30	34 58	33 48	31 15 30		197 32 15		6	K.	R. 1	Do.
	0 36 4	35 33½	33 58	31 13 35		197 46 30		6	C.	R. 1	Do.
	0 36 4	35 33½	33 58	31 12 40		197 16 40		6	K.	D.	Do.
	0 48 52	36 38⅙	34 15	31 4 49		196 37 0		6	C.	B.	Do.
	0 48 52	36 38⅙	34 15	31 5 57		197 15 50		6	K.	R. 4	Do.
	0 55 8	37 7⅓	34 21	31 3 0		197 13 30		6	C.	R. 4	Do.
	0 55 8	37 7⅓	34 21	31 2 49		196 50 10		6	K.	B.	Do.
♀ —— 11.	0 50 53	36 56	39 1⅔	16 59 52	64 20	197 30 15	62	6	K.	R. 1	Do.
	0 58 12	37 24½	39 20	16 55 20		198 12 45		6	K.	D.	Do.
	1 50 6	36 18⅓	40 21½	60 41 25		197 32 45		6	K.	R. 1	☽ à Pollux.
	1 56 55	37 1⅓	40 22½	60 38 0		197 28 45		6	K.	D.	Do.
	8 4 28	26 36½	13 55	115 16 42	64 30⅔	197 14 0	64	6	C.	D.	☽ à Sun.
	8 4 28	26 36½	13 55	115 17 55		197 46 30		6	K.	R. 1	Do.
	8 7 32	26 25	13 35	115 16 27		197 52 15		6	C.	R. 1	Do.
	8 7 32	26 25	13 35	115 15 22		197 30 15		6	K.	D.	Do.
	8 46 56	28 15	9 46	114 52 17		197 7 15		6	C.	B.	Do.

In Nootka Bay.

1778.	Time per Watch.	Altitude of the ☉'s L. L. or ✱.	Moon's Altitude.	Distance of ☽'s Limb from the ☉'s, or a ✱.	Latitude of the Ship.	Longitude East of Greenwich.	Therm.	No. of Obs.	Observers.	Sextant used.	Objects.
	H. ′ ″	° ′	° ′	° ′ ″	° ′	° ′ ″	°				
♀ Sept. 11.	8 46 56	28 15	9 46 Cr.	114 53 15	64 30½ N	197 29 15 E	64	6	K.	R. 4	☽ à Sun.
	8 50 50	28 24⅙	9 36	114 49 30		196 47 45		6	C.	R. 4	Do.
	8 50 50	28 24⅙	9 36	114 50 50		197 24 25		6	C.	B.	Do.
♄ —— 12.	1 52 45	45 48	43 35 U	32 23 0		197 10 0	59	6	C.	D.	☽ à α Arietis.
	1 52 45	45 48	43 35	32 23 7		197 4 15		6	K.	R. 1	Do.
	1 57 14	45 36	43 54	32 25 50		196 36 0		6	C.	R. 1	Do.
	1 57 14	45 36	43 54	32 27 12		196 25 30		6	K.	D.	Do.
	2 8 21	44 57	44 21⅓	32 29 37		196 54 45		6	C.	B.	Do.
	2 8 21	44 57	44 21⅓	32 30 0		196 43 40		6	K.	R. 4	Do.
	2 14 38	44 35	44 27⅓	32 32 5		196 51 45		6	K.	B.	Do.
	8 36 2	27 25½	20 21⅓	101 51 7		198 2 0	62	6	C.	R. 1	☽ à Sun.
	8 48 12	27 53	19 7½	101 43 17		197 36 15		6	C.	D.	Do.
	8 58 21	28 14⅓	19 9½	101 37 0		197 18 30		6	C.	B.	Do.
	9 6 16	28 38½	17 21½	101 32 7		197 16 30		6	C.	R. 1	Do.
☉ —— 13.	1 57 48	45 19	43 46 Cr.	45 33 0	64 31½	197 4 15	53	6	C.	D.	☽ à α Arietis.
	1 57 48	45 19	43 46	45 31 32		196 31 15		6	K.	R.	Do
	2 4 22	44 56	44 9	45 35 10		196 52 0		6	C.	R. 1	Do.
	2 4 22	44 56	44 9	45 35 27		196 45 0		6	K.	D.	Do.
	2 16 52	44 12	44 53	45 42 15		196 15 0		6	C.	R. 1	Do.
	2 16 52	44 12	44 53	45 41 48		196 20 35		6	K.	D.	Do.
	7 22 18	23 0	36 33⅙	89 15 10	64 30⅔	198 13 15	54	6	C.	B.	☽ à Sun.
	7 22 18	23 0	36 33⅙	89 14 7		198 47 45		6	K.	R. 1	Do.
	7 27 22	23 21	36 15	89 13 15		198 52 0		6	C.	R. 1	Do.
	7 27 22	23 21	36 15	89 13 10		198 21 0		6	K.	B.	Do.
	7 48 1	24 23⅔	34 3⅔	89 1 15		197 26 30		6	C.	R. 4	Do.
	7 48 1	24 23⅔	34 3⅔	89 1 5		197 26 30		6	K.	D.	Do.
	7 50 23	24 39	33 35	88 59 15		197 34 0		6	C.	D.	Do.
	7 50 23	24 39	33 35	89 0 25		198 6 15		6	K.	R. 4	Do.
☽ —— 14.	1 30 30	46 32⅙	38 5⅓ L	58 54 35	64 31½	196 26 45		6	C.	R. 1	☽ à α Arietis.
	1 38 58	46 18	39 2	58 57 2		197 28 15		6	K.	D.	Do.
	1 49 35	45 46⅓	40 7½	59 2 52		196 47 0		6	K.	B.	Do.
	1 58 28	45 17⅓	40 56⅔	59 6 7		197 13 45		6	K.	R. 4	Do.
	9 24 40	28 21⅙	30 38⅔ U	74 59 2	64 16¾	198 3 30	56	6	C.	R. 1	☽ à Sun.
	9 31 15	28 23½	29 4	74 54 52		197 30 30		6	K.	D.	Do.
	9 38 37	28 26⅔	29 19	74 50 49		197 27 15		6	C.	B.	Do.
	9 44 9	28 29½	28 41	74 49 17		198 4 45	55	6	K.	R. 4	Do.
♂ —— 15.	1 11 10	47 [illegible]	31 35	72 25 53		196 50 45		6	K.	R. 1	☽ à α Arietis.
	1 18 13	46 45	32 12	72 28 50		197 9 30		6	C.	D.	Do.
	1 27 0	46 27	32 53½	72 35 29		196 14 45		6	K.	B.	Do.
	9 8 10	27 46⅓	38 12	61 56 0	64 20⅓	197 48 45	56	6	C.	R. 1	☽ à Sun.
	9 13 34	27 52½	37 40	61 31 37		197 0 0		6	C.	D.	Do.
	9 20 30	27 57½	36 55⅔	61 49 14		197 27 15		6	C.	B.	Do.
	9 26 1	28 2	36 24½	61 47 20		197 48 30		6	C.	R. 1	Do.
♂ Nov. 10.	1 37 9	43 29	66 51½ L	62 21 5	40 39	204 35 30	62½	6	K.	R. 1	☽ à Aldebar.
	1 48 45	41 34	68 24	62 25 50		204 31 30		6	K.	D.	Do.
	2 1 31	39 4	69 11½	62 31 0		204 30 15		6	K.	B.	Do.
	2 26 28	34 22	71 23	62 40 5		204 49 0		6	K.	R. 4	Do.
☿ —— 11.	7 44 12	30 58⅔	35 0 U	84 23 2	38 22	206 43 30	67	6	C.	R. 4	☽ à Sun.
	7 44 12	30 58⅔	35 0	84 22 8		206 18 0		6	K.	P.	Do.
	7 48 57	31 19⅙	34 0	84 19 55		206 24 0		6	C.	D.	Do.
	7 48 57	31 19⅙	34 0	84 20 30		206 40 0		6	K.	R. 4	Do.
	8 9 45	32 34	31 0	84 10 17		206 8 15		2	C.	B.	Do.

In Norton Bay.

1778.	Time per Watch N° 1.	Altitude of the ☉'s L. L. or ✱.	Moon's Altitude.	Distance of the ☽'s Limb from the ☉'s or ✱.	Latitude of the Ship.	Longitude East of Greenwich.	Therm.	N° of Obs.	Observers.	Sextant used.	Objects.
	H. ′ ″	° ′	° ′	° ′ ″	° ′	° ′ ″	°				
♀ Nov. 11.	8 9 45	32 34	31 0 U	84 10 45	38 22 N	206 26 0 E	67	2	K.	R. 1	☽ à Sun.
	8 32 39	33 30⅓	25 48	83 58 40		205 50 15		6	C.	B.	Do.
	8 32 39	33 30⅓	25 48	84 0 0		206 22 30		6	K.	R. 1	Do.
♀ —— 25.	12 29 25	26 3	41 49	64 10 50	24 25	204 40 45	79	6	C.	B.	Do.
	12 29 25	26 3	41 49	64 11 2		204 33 0		6	K.	R. 1	Do.
	12 34 22	25 9⅓	42 17½	64 12 55		204 16 0		6	C.	R. 1	Do.
	12 34 22	25 9⅓	42 17½	64 12 30		204 29 45		6	K.	B.	Do.
	12 31 31	21 52	43 50	64 17 7		204 11 45		6	C.	R. 4	Do.
	12 31 31	21 52	43 50	64 16 37		204 29 30		6	K.	D.	Do.
	12 58 14	20 35½	44 22⅔	64 18 27		204 15 30		6	C.	D.	Do.
	12 58 14	20 35½	44 22⅔	64 18 42		204 9 30		6	K.	R. 4	Do.
♃ —— 26.	13 5 16	20 2⅔	42 55	75 34 15	20 57¼	202 53 15	80	6	C.	B. 4	Do.
	13 5 16	20 2⅔	42 55	75 33 45		203 9 5		6	K.	D.	Do.
	13 10 6	19 6⅓	43 28⅔	75 34 53		203 18 15		6	C.	D.	Do.
	13 10 6	19 6⅓	43 28⅔	75 35 40		202 52 45		6	K.	R. 4	Do.
	13 22 29	16 39¼	44 55	75 36 52		203 47 15		6	C.	B.	Do.
	13 22 29	16 39¼	44 55	75 38 10		203 6 5		6	K.	R. 1	Do.
	13 27 25	15 39	45 28	75 39 37		202 56 15		6	C.	R. 1	Do.
	13 27 25	15 39	45 28	75 39 12		203 9 30		6	R.	B.	Do.
♀ —— 27.	16 31 47	55 46½	50 49½ L	62 52 0	21 0	204 14 45	77¾	6	C.	B.	☽ à α Arietis.
	16 31 47	55 46½	50 49½	62 51 47		204 8 0		6	K.	R. 1	Do.
	16 39 15	57 32½	50 18⅔	62 50 17		204 37 45		6	C.	R. 1	Do.
	16 39 15	57 32½	50 18⅔	62 50 0		204 24 30		6	K.	B.	Do.
	16 55 10	61 19	48 49	62 44 57		204 43 15		6	C.	R. 4	Do.
	16 55 10	61 19	48 49	62 44 30		204 33 15		6	K.	D.	Do.
	17 1 57	62 55½	48 6	62 42 55		204 53 30		6	C.	D.	Do.
	17 1 57	62 55½	48 6	62 41 45		204 16 0		6	K.	R. 4	Do.
☉ —— 29.	12 53 4	21 45⅔	24 3½ U	110 47 57	21 19	205 5 15	76¾	6	C.	R. 4	☽ à Sun.
	12 53 4	21 45⅔	24 3½	110 49 35		204 17 15		6	K.	D.	Do.
	13 1 18	20 5	25 52	110 52 50		204 11 0		6	C	D.	Do.
	13 1 18	20 5	25 52	110 51 55		204 41 15		6	K.	R. 4	Do.
	13 14 14	17 39¼	17 42½	110 59 15		204 2 30		4	C.	B.	Do.
	13 14 14	17 39¼	17 42½	110 59 0		204 6 0		4	K.	R. 1	Do.
	18 32 39	50 36	56 28 L	65 57 5	21 11	203 52 30	72	6	C.	B.	☽ à Aldebar.
	18 32 39	50 36	56 28	65 56 40		204 30 0		6	K.	R. 1	Do
	18 39 8	52 9⅓	55 28½	65 54 55		204 32 15		6	C.	R. 1	Do.
	18 39 8	52 9⅓	55 28½	65 54 30		204 21 15		6	K.	B.	Do.
	18 50 26	54 43	53 34	65 51 52		205 0 45		6	C.	R. 4	Do.
	18 50 26	54 43	53 34	65 50 19		204 19 45		6	K.	D.	Do.
	18 59 45	57 16	51 26	65 46 53		204 21 45		6	C.	D.	Do.
	18 59 45	57 16	51 26	65 46 45		204 24 15		6	K.	R. 4	Do.
☽ —— 30.	16 4 23	36 59	57 55 U	79 20 45	20 51	205 20 0	77	6	C.	R. 4	☽ à α Aquilæ.
	16 4 23	36 59	57 55	79 22 12		204 55 0		6	K.	D.	Do.
	16 10 32	35 32	58 59⅓	79 23 35		204 40 0		6	C.	R. 4	Do.
	16 10 32	35 32	58 59⅓	79 22 37		204 38 30		6	K.	D.	Do.
	16 24 57	32 3½	61 36⅓	79 26 40		205 2 0		6	C.	B.	Do.
	16 24 57	32 3½	61 36⅓	79 28 15		204 43 45		6	K.	R. 1	Do.
	16 32 54	30 12	63 5⅔	79 31 20		203 52 15		6	C.	R. 1	Do.
	16 32 54	30 12	63 5⅔	79 28 38		205 4 0		6	K.	B.	Do.
	16 41 51	26 1⅔	64 20⅔	52 49 47		204 29 15		6	C.	R. 1	☽ à Aldebar.
	16 41 51	26 1⅔	64 20⅔	52 48 50		204 2 15		6	K.	B.	Do.
	16 46 3	26 55	64 2	52 47 4		203 55 15		4	C.	B.	Do.

1778.	Time per Watch N° 1.	Altitude of the ☉'s L. L. or ✱.	Moon's Altitude.	Distance of the ☽'s Limb from the ☉'s or ✱.	Latitude of the Ship.	Longitude East of Greenwich.	Therm.	N° of Obs.	Observers.	Sextant used.	Objects.
	H ′ ″	° ′	° ′	° ′ ″	° ′	° ′ ″	°				
☽ Nov. 30.	16 46 3	26 55	64 2 U	52 46 45	20 51 N	203 46 45 E	77	4	K.	R. 1	☽ à Aldebar.
	16 58 36	29 17½	66 51½	52 45 37		205 13 45		2	C.	R. 4	Do.
	16 58 36	29 17½	66 51½	52 44 20		204 38 15		2	K.	D.	Do.
☿ Dec. 2.	17 25 15	31 14	60 2	72 8 10	20 17	204 20 45	75	6	C.	D.	☽ a Fomalhaut.
	17 25 15	31 14	60 2	72 8 17		204 16 30		6	K.	R. 1	Do.
	17 34 52	28 9⅔	61 50⅙	72 11 47		204 10 30		6	C.	R. 1	Do.
	17 34 52	28 9⅔	61 50⅙	72 11 5		204 28 0		6	K.	D.	Do.
♀ —— 4.	18 48 32	19 9⅓	52 54¾ L	36 9 40	20 28	204 7 0	74	6	K.	D.	☽ à Pollux.
♄ —— 5.	21 30 6	46 30	75 22 U	56 59 55	20 22½	205 8 30	75	6	K.	R. 1	☽ a α Arietis.
☾ —— 6.	1 5 46	28 32	70 19 Cr.	41 55 15	22 40	204 52 15	75	6	K.	R. 1	☽ à Aldebaran.
	1 18 11	25 39	67 31	42 1 35		204 11 15		6	K.	D.	Do.
	2 19 17	83 44	54 29 U	38 19 0		204 35 45		6	K.	R. 1	☽ à Regulus.
	2 31 15	82 20	51 25½	38 13 42		204 31 45		6	K.	D.	Do.
☽ —— 7.	23 39 10	48 11⅔	75 25¾	56 23 32	20 18	204 32 0	73½	6	K.	R. 1	☽ à Aldebaran.
	23 49 14	45 52	77 29	56 27 7		204 23 15		6	K.	D.	Do.
♂ —— 8.	6 21 46	29 5	26 16	116 39 7	20 42	204 32 15	74	6	C.	D.	☽ à Sun.
	6 21 46	29 5	26 16	116 39 15		204 36 0		6	K.	R. 1	Do.
	6 25 39	29 40⅙	25 28⅙	116 38 22		205 2 0		6	C.	R.	Do.
	6 25 39	29 40⅙	25 28⅙	116 37 10		204 28 45		6	K.	D.	Do.
	6 40 17	32 6	21 9	116 29 5		204 6 45		6	C.	R. 4	Do.
	6 40 17	32 6	21 9	116 28 55		204 2 15		6	K.	C.	Do.
	6 45 22	32 55⅓	21 4	116 25 32		203 45 45		6	C.	C.	Do.
	6 45 22	32 55⅓	21 4	116 26 20		204 13 30		6	K.	R. 4	Do.
☉ —— 27.	12 22 47	28 11⅓	39 18⅙	91 0 30	19 22½	205 21 30	74	6	C.	R.	Do.
	12 22 47	28 11⅓	39 18⅙	91 0 17		205 27 30		6	K.	D.	Do.
	12 28 42	27 15⅙	40 34	91 2 55		205 17 30		6	C.	D.	Do.
	12 28 42	27 15⅙	40 34	91 2 35		205 27 30		6	K.	R.	Do.
	12 32 39	26 27⅓	41 26½	91 4 22		205 10 30		6	C.	D.	Do.
	12 32 39	26 27⅓	41 26½	91 4 5		205 17 30		6	K.	R.	Do.
	12 36 22	25 47⅔	42 13⅓	91 4 50		205 14 30		6	C.	R. 1	Do.
	12 36 22	25 47⅔	42 13⅓	91 5 15		205 0 30		6	K.	D.	Do.
	12 59 22	21 34½	47 9	91 12 1		205 37 45		6	G.	D.	Do.
	12 59 22	21 34½	47 9	91 13 52		204 42 15		6	T.	R. 4	Do.
	12 59 22	21 34½	47 9	91 13 27		204 55 15		6	P.	R. 1	Do.
	13 11 5	19 18½	49 35⅙	91 15 42		205 45 30		6	G.	R. 1	Do.
	13 11 5	19 18½	49 35⅙	91 15 17		205 41 0		6	T.	D.	Do.
	13 19 57	17 32¼	51 29¾	91 20 55		204 35 45		6	R.	R. 1	Do.
	13 19 57	17 32¼	51 29¾	91 19 49		205 8 45		6	P.	D.	Do.
	17 11 14	59 33⅓	58 53½ L	57 55 4	19 10	206 3 0	73½	6	C.	D.	☽ à Aldebaran.
	17 11 14	59 33⅓	58 53½	57 54 45		205 55 0		6	K.	R.	Do.
	17 17 9	61 1⅓	57 51¾	57 53 20		205 58 0		6	C.	R.	Do.
	17 17 9	61 1⅓	57 51¾	57 53 29		206 1 30		6	K.	D.	Do.
	17 21 56	62 16⅙	56 56⅙	57 51 42		206 13 30		6	C.	R. 1	Do.
	17 21 56	62 16⅙	56 56⅙	57 51 51		206 12 0		6	K.	D.	Do.
	17 26 54	63 17⅙	55 57⅓	57 49 29		205 50 30	72½	6	C.	D.	Do.
	17 26 54	63 17⅙	55 57⅓	57 48 37		205 54 15		6	K.	R.	Do.
☽ —— 28.	13 15 21	18 39⅔	43 15¾	103 46 57	19 15	205 24 15	73½	6	C.	D.	☽ a Sun.
	13 15 21	18 39⅔	43 15¾	103 47 22		205 12 15		6	K.	R. 1	Do.
	13 20 0	17 47½	44 19½	103 49 45		204 51 15		6	C.	R.	Do.
	13 20 0	17 47½	44 19½	103 49 2		205 5 0		6	K.	D.	Do.
	13 23 34	17 4⅔	45 8½	103 51 2		204 50 15		6	C.	R.	Do.
	13 23 34	17 4⅔	45 8½	103 51 12		205 0 0		6	K.	D.	Do.

1778.	Time per Watch N° 1.	Altitude of the ☉'s L. L. or ✱.	Moon's Altitude.	Distance of the ☽'s Limb from the ☉'s, or ✱.	Latitude of the Ship.	Longitude East of Greenwich.	Therm.	N° of Obs.	Observers.	Sextant used.	Objects.
	H. ′ ″	° ′	° ′	° ′ ″	° ′	° ′ ″	°				
☽ Dec. 28.	13 28 13	16 10⅓	46 4¾ L	103 51 0	19 15 N	205 16 15 E	73½	6	C.	D.	☽ à Sun.
1779.	13 28 13	16 10⅓	46 4¾	103 0 42		205 9 0		6	K.	R.	Do.
☉ Jan. 3.	22 4 41	55 46¾	84 2⅓	32 22 27	19 7⅓	205 46 30	73	6	C.	D.	☽ à Regulus.
	22 4 41	55 46¾	84 2⅓	32 21 27		204 40 30		6	K.	R. 1	Do.
	22 11 11	57 19	84 34⅙	32 18 55		204 49 0		6	C.	R. 1	Do.
	22 11 11	57 19	84 34⅙	32 19 40		205 7 0		6	K.	D.	Do.
	22 19 31	40 47½	84 37⅓	48 33 15		204 37 0		6	C.	D.	☽ à Aldebaran.
	22 19 31	40 47½	84 37⅓	48 33 10		204 39 0		6	K.	R. 1	Do.
	22 27 3	38 57⅓	84 2¾	48 34 7		205 14 0		6	C.	R. 1	Do.
	22 27 3	38 57⅓	84 2¾	48 25 40		204 48 0		6	K.	D	Do.
♂ —— 5.	1 53 1	35 3	68 45½	35 52 12	19 4	204 17 0	75¾	6	K.	R. 1	☽ à Pollux.
	1 0 41	33 3	66 57½	35 56 42		203 44 15		6	K.	D.	Do.
	2 10 24	54 10	64 35⅔	54 47 35		204 19 15		6	K.	R. 1	☽ à Spica Virg.
	2 16 9	55 1	63 24⅓	54 44 17		203 48 15		6	K.	D.	Do.
☿ —— 6.	23 36 29	25 4½	66 3½	41 29 22	18 58	203 53 15	68	6	K.	R. 1	Do.
	23 44 23	26 53	67 58½	41 26 45		203 52 15		6	K	D.	Do.
	23 56 25	59 47½	70 37	49 31 2		203 20 30		6	K.	D.	☽ à Pollux.
	0 5 0	57 56	72 37	49 33 19		203 44 15		6	K.	R. 1	Do.
	0 14 9	56 0½	74 31⅓	49 36 25		203 52 0		6	K.	R. 3	Do.
	0 23 14	35 4⅓	76 25⅙	41 11 22		203 24 45		6	K.	R. 1	☽ à Spica Virg.
♃ —— 7.	3 9 3	47 10⅓	70 25	28 36 45	19 1	204 16 15	71¾	6	K.	R. 2	☽ à Regulus.
	3 15 22	45 27½	69 36½	28 40 32		203 38 45		6	K.	D.	Do.
	3 24 43	26 46½	67 19⅓	72 0 32		203 57 45		6	K.	D.	☽ à Antares.
	3 29 55	27 26	65 32	71 59 5		204 20 0		6	K.	R. 1	Do.
	5 30 35	18 24	38 48⅓ L	111 3 7	19 0	204 35 45	74	6	C.	R. 1	☽ à Sun.
	5 30 35	18 24	38 48⅓	111 3 7		204 22 45		6	K.	D.	Do.
	5 33 51	19 3	38 6⅙	111 1 22		204 24 30		6	C.	D.	Do.
	5 33 51	19 3	38 6⅙	111 1 37		204 31 45		6	K.	R. 1	Do.
	6 25 5	28 48¾	26 14⅙	110 40 47		204 34 45		6	C.	B.	Do.
	6 25 5	28 48¾	26 14⅙	110 40 55		204 38 30		6	K.	R.	Do.
	6 29 6	29 31⅓	25 20¾	110 39 35		204 35 45		6	C.	R. 1	Do.
	6 29 6	29 31⅓	25 20¾	110 38 47		204 17 30		6	K.	B.	Do.
	7 11 14	35 0⅓	17 53⅔	110 24 25		204 19 15		6	C.	R. 1	Do.
	7 11 14	35 0⅓	17 53⅔	110 24 27		204 21 15		6	K.	D,	Do.
	7 5 20	35 40	16 58⅔	110 22 5		204 9 30		6	C.	D.	Do.
	7 5 20	35 40	16 58⅔	110 22 0		204 34 30		6	K.	R. 4	Do.
	7 13 29	37 20⅙	31 10⅔	86 20 42		204 17 45		6	C.	B.	Do.
	7 13 29	37 20⅙	31 10⅔	86 20 22		204 7 30		6	K.	R.	Do.
♄ —— 9.	7 19 14	38 12	29 55 U	86 18 45	18 42	205 5 15	74	6	C.	R.	Do.
	7 19 14	38 12	29 55	86 17 50		204 37 15		6	K	B.	Do.
	7 28 6	39 31½	27 55½	86 14 30		203 50 30		6	C.	R. 3	Do.
	7 28 6	39 31½	27 55½	86 15 0		204 5 45		6	K.	D.	Do.
	7 31 23	40 2	27 10	86 13 42		204 3 15		6	C.	D.	Do.
	7 31 23	40 2	27 10	86 13 36		204 0 15		6	K.	R. 3	Do.
☉ —— 10.	6 19 40	28 13⅓	48 3½	75 7 32	18 52	204 17 45		6	C.	B.	Do.
	6 19 40	28 13⅓	48 3½	75 7 55		204 30 0		6	K.	R.	Do.
	6 24 4	29 2	47 11⅓	75 5 55		204 30 30		6	C.	R. 1	Do.
	6 24 4	29 2	47 11⅓	75 6 22		204 11 45		6	K.	B.	Do.
	6 36 2	31 7½	45 11⅓	75 3 35		204 32 45		6	C.	R.	Do.
	6 36 2	31 7½	44 11⅓	75 3 30		204 31 45		6	K.	D.	Do.
	6 39 36	31 45⅔	45 20⅙	75 2 30		204 30 45		6	C.	D.	Do.
	6 39 36	31 45⅔	45 20⅙	75 3 2		204 47 45		6	K.	R. 3	Do.

1779.	Time per Watch N° 1.	Altitude of the ☉'s L. L. or ✱.	Moon's Altitude.	Distance of the ☽'s Limb from the ☉'s or ✱.	Latitude of the Ship.	Longitude East of Greenwich.	Therm.	N° of Obs.	Observers.	Sextant used.	Objects.
	° ′ ″	° ′	° ′	° ′ ″	° ′	° ′ ″	°				
☽ Jan. 11.	8 40 9	47 49⅔	26 46½ U	63 12 20	18 38 N	203 45 0 E	74	6	C.	B.	☽ a Sun.
	8 40 9	47 49⅔	26 46½	63 12 35		203 53 15		6	K.	R. 1	Do.
	8 44 11	48 11⅔	25 59⅔	63 11 30		204 5 15		6	C.	R.	Do.
	8 44 11	48 11⅔	25 59⅔	63 11 6		203 51 45		6	K.	B.	Do.
	8 53 56	48 39	24 0¼	63 10 50		204 20 45		6	C.	R. 3	Do.
	8 53 56	48 39	24 0¼	63 11 7		204 7 0		6	K.	D.	Do.
	8 57 32	48 49⅙	23 11¾	63 7 5		204 1 45		6	C.	D.	Do.
	8 57 32	48 49⅙	23 11¾	63 7 20		204 5 15		6	K.	R. 3	Do.
	8 57 32	48 49⅙	23 11¾	63 7 30		204 9 15		6	T.	R. 1	Do.
	9 30 56	49 32¾	16 5	62 55 0	18 35	204 9 30	76	6	G.	D.	Do.
	9 30 56	49 32¾	16 5	62 55 15		204 34 0		6	Ta.	R. 1	Do.
♂ —— 12.	7 6 17	36 17⅓	47 39½	52 36 52	18 49	204 27 15	76½	6	C.	B.	Do.
	7 6 17	36 17⅓	47 39½	52 37 17		204 8 0		6	K.	R.	Do.
	7 9 43	36 49	47 12½	52 36 32		204 14 45		6	C.	R. 1	Do.
	7 9 43	36 49	47 12½	52 36 2		203 56 45		6	K.	B.	Do.
	7 9 43	36 49	47 12½	52 36 40		204 23 0		6	M.	R. 3	Do.
	7 14 8	38 31⅙	45 48¾	52 34 20		204 31 15		6	C.	R. 3	Do.
	7 14 8	38 31⅙	45 48¾	52 34 30		204 36 45		6	K.	D.	Do.
	7 14 8	38 31⅙	45 48¾	52 33 52		204 16 15		6	M.	R. 1	Do.
	7 24 16	39 3	45 24⅔	52 33 5		204 18 30		6	C.	D.	Do.
	7 24 16	39 3	45 24⅔	52 33 30		204 32 15		6	K.	R. 2	Do.
	7 38 51	41 9⅔	43 18⅔	52 30 52		205 5 30		6	T.	R. 1	Do.
	7 38 51	41 9⅔	43 18⅔	52 29 45		204 28 30		6	P.	D.	Do.
	7 38 51	41 9⅔	43 18⅔	52 30 15		204 45 0		6	Ta	R. 3	Do.
	7 47 18	42 14⅔	42 0⅓	52 27 37		204 32 0		6	T.	D.	Do.
	7 47 18	42 14⅔	42 0⅓	52 27 7		204 11 30		6	P.	R. 1	Do.
	7 47 18	42 14⅔	42 0⅓	52 26 50		204 5 45		6	G.	R 3	Do.
♄ Feb. 13.	12 2 27	42 4½	54 8½	79 11 40	19 53	204 26 45	75½	6	C.	R	Do.
	12 2 27	42 4½	54 8½	79 14 15		203 14 45		6	K.	D.	Do.
	12 9 8	40 53⅙	55 38	79 15 10		203 52 45		6	C.	D.	Do.
	12 9 8	40 53⅙	55 38	79 16 5		203 28 0		6	K.	R. 5	Do.
	12 27 16	37 16⅔	59 48⅙	79 21 32		203 53 0		6	C.	R. 5	Do
	12 27 16	37 16⅔	59 48⅙	79 22 15		203 32 45		6	K.	R. 1	Do.
♃ —— 24.	11 32 52	47 21¾	35 37⅙	92 1 7	20 19	203 10 30	79	6	K.	D.	Do.
	11 36 51	46 42¾	36 35¾	92 2 32		203 16 45		6	C.	D.	Do.
	11 36 51	46 42¾	36 35¾	92 1 4		203 16 45		6	K.	R. 1	Do.
	12 11 14	40 25⅙	44 19	92 16 50		203 16 30		6	C.	R. 1	Do.
	12 11 14	40 25⅙	44 19	92 16 38		203 27 15		6	K.	B.	Do.
	12 17 39	39 12¾	45 49⅙	92 19 52		203 1 30		7	C.	R. 1	Do.
	12 17 39	39 12¾	45 49⅙	92 17 45		203 29 15		7	T.	R. 3	Do.
	12 27 59	37 4¾	48 10⅓	92 23 40		203 1 0		7	P.	R. 1	Do.
	12 27 59	37 4¾	48 10⅓	92 23 35		203 13 0		6	K.	R. 5	Do.
	12 27 59	37 4¾	48 10⅓	92 23 40		203 10 45		6	B.	R. 3	Do.
	18 47 55	81 43⅔	45 56¼ L	40 18 52	20 45	203 42 33	76	6	K.	D.	☽ à Pollux.
	18 47 55	81 43⅔	45 56¼	40 17 55		203 32 15		6	B.	R. 5	Do.
	18 57 8	80 54	44 2	40 14 15		203 32 45		6	C.	D.	☽ à Regulus.
	18 57 8	80 54	44 2	40 12 45		203 37 0		6	K.	R. 5	Do.
	19 8 0	79 12⅓	41 38¾	40 10 10		203 48 45		6	C.	R. 3	Do.
	19 8 0	79 12⅓	41 38¾	40 10 0		203 44 15		6	K.	R. 1	Do.
	19 21 12	76 55⅔	38 40⅔	40 4 30		203 24 30		6	C.	R. 1	Do.
	19 21 12	76 55⅔	38 40⅔	40 4 40		203 28 45		6	K.	B.	Do.
♃ —— 25.	12 12 40	40 26	31 50⅔	105 29 47	20 39	203 28 30	78½	6	C.	R. 3	☽ à Sun.

1779.	Time per Watch N° 1.	Altitude of the ☉'s L. L. or ✱.	Moon's Altitude.	Distance of the ☽'s Limb from the ☉'s, or ✱.	Latitude of the Ship.	Longitude East of Greenwich.	Therm.	N° of Obs.	Observers.	Sextant used.	Objects.
	H. ′ ″	° ′	° ′	° ′ ″	° ′	° ′ ″	°				
♃ Feb. 25.	12 12 40	40 26	31 50⅔ L	105 28 25	20 39 N	203 33 15 E	78½	6	K.	B.	☽ à Sun.
	12 19 38	39 3	33 29	105 33 12		202 52 15		6	C.	R. 3	Do.
	12 19 38	39 3	33 29	105 31 42		203 33 15		6	K.	B.	Do.
	12 38 34	37 14⅔	35 26⅔	105 36 15		203 15 45		6	C.	D.	Do.
	12 38 34	37 14⅔	35 26⅔	105 36 59		202 56 30		6	K.	R. 5	Do.
	12 35 12	35 54½	36 52⅙	105 39 20		203 12 0		6	C.	R. 1	Do.
	12 35 12	35 54½	36 52⅙	105 39 30		203 7 30		6	K.	D.	Do.
	17 27 13	39 55⅓	78 16⅔	62 30 17	20 35	202 55 45	75	6	C.	R. 5	☽ à Regulus.
	17 27 13	39 55⅓	78 16⅔	62 30 32		203 1 15		6	K.	D.	Do.
	17 34 4	41 25⅙	76 23	62 28 15		203 23 15		6	C.	D.	Do.
	17 34 4	41 25⅙	76 23	62 27 49		203 1 30		6	K.	R. 5	Do.
	17 42 52	26 19½	74 13	50 16 52		203 9 0		6	C.	R. 1	☽ à α Arietis.
	17 42 52	21 19½	74 13	50 16 9		203 24 0		6	K.	R. 5	Do.
	17 51 39	21 40¾	72 19⅓	50 19 0		203 27 15		6	C.	R. 1	Do.
	17 51 39	24 40⅔	72 19⅓	50 19 10		203 20 30		6	K.	D.	Do.
	18 4 46	18 45⅙	69 16⅔	50 22 49		203 39 0		6	C.	R. 5	Do.
	18 4 46	18 45⅙	69 16⅔	50 23 22		203 23 15		6	K.	B.	Do.
	18 20 17	52 12⅔	65 54⅔	62 11 47		203 24 15		6	K.	R. 1	☽ à Regulus.
	18 28 28	54 5⅙	64 3	62 8 0		203 6 0		6	C.	R. 1	Do.
	18 28 28	54 5⅙	64 3	62 7 47		203 3 30		6	K.	B.	Do.
☽ March 1.	22 39 59	32 36½	63 47½	35 0 30	21 56¾	199 36 0	75½	6	K.	D.	☽ à Pollux.
	22 49 21	30 40⅓	62 8½	35 3 10		200 9 45		6	K.	R. 1	Do.
	22 59 44	28 24⅓	59 16⅔	35 7 42		200 2 0		6	K.	B.	Do.
	23 7 35	55 15	57 27⅙	35 7 32		199 41 30		6	K.	B.	☽ à Spica Virg.
	23 16 32	56 6⅔	55 31	55 32 52		200 17 45		6	K.	D.	Do.
	23 25 55	56 49	53 21⅔	55 28 13		200 7 30		6	K.	R. 1	Do.
♃ —— 4.	11 38 36	24 48	67 55½	57 53 47	21 56	198 28 15	74	6	C.	R. 1	☽ à Antares.
	11 38 36	24 48	67 55½	57 54 30		198 54 15		6	K.	D.	Do.
	11 38 36	24 48	67 55½	57 53 21		198 24 15		6	B.	R. 3	Do.
	11 49 26	26 36	67 19½	57 50 42		198 59 30		6	C.	D.	Do.
	11 49 26	26 36	67 19½	57 50 15		148 51 15		6	K.	R. 1	Do.
	11 49 26	26 36	67 19½	57 49 17		199 3 1		6	B.	R. 5	Do.
	14 59 19	41 10⅔	66 23⅓	42 50 15		199 28 45		6	C.	B	☽ à Regulus.
	14 59 19	41 10⅔	66 23⅓	42 48 49		200 4 45		6	K.	R. 1	Do.
	14 59 19	41 10⅔	66 23⅓	42 48 34		200 11 15		6	B.	R. 5	Do.
	12 16 52	37 6	64 20¾	42 55 52		200 3 40		6	C.	R. 5	Do.
	12 16 52	37 6	64 20¾	42 54 52		200 30 45		6	K.	B.	Do.
	12 16 52	37 6	64 20¾	42 55 50		200 1 45		6	B.	R. 1	Do.
	12 30 19	32 43⅙	62 26¾	57 35 9		199 5 45		6	C.	R. 5	☽ à Antares.
	12 30 19	32 43⅙	62 26¾	57 35 45		199 17 30		6	K.	B.	Do.
	12 30 19	32 43⅙	62 26¾	57 34 22		199 17 30		6	B.	R. 3	Do.
	12 38 16	32 10⅓	61 13	43 1 45		200 15 45		6	K.	B.	Do.
	12 48 59	29 57	59 29	43 7 35		200 1 30		6	K.	D.	☽ à Regulus.
☉ —— 7.	1 36 30	15 51⅓	51 56½	82 4 57	21 57	200 9 30	74¼	6	C.	D.	Do.
	1 36 30	15 51⅓	51 56½	82 44 37		199 55 0		6	K.	R. 1	Do.
	1 44 31	13 59⅔	51 48	82 46 12		200 10 45		6	C.	R. 1	Do.
	1 44 31	13 59⅔	51 48	82 46 25		199 5 0		6	K.	D.	Do.
	1 52 27	44 42⅓	51 40	29 5 40		200 16 45		6	C.	R. 1	☽ à Spica Virg.
	1 52 27	44 42⅓	51 40	29 5 50		199 56 0		6	K.	D.	Do.
	1 58 42	43 38	51 30	29 7 52		200 5 45		6	C.	D.	Do.
	1 58 42	43 38	51 30	29 7 35		200 15 15		6	K.	R. 1	Do.
☿ —— 10.	1 22 57	47 30¾	23 20	82 6 2	21 49½	199 54 15	78½	6	B.	R. 1	☽ à Sun.

1779.	Time per Watch N° 1.	Altitude of the ☉'s L. L. or ✳.	Moon's Altitude.	Distance of the ☽'s Limb from the ☉'s or ✳.	Latitude of the Ship.	Longitude East of Greenwich.	Therm.	N° of ON.	Observer.	Sextant used.	Objects.
	H. ′ ″	° ′	° ′	° ′ ″	° ′	° ′ ″	°				
☿ March 10	7 22 57	47 30¾	23 20 U	82 5 20	21 49½ N	199 53 45 E	78½	6	K.	R.	☽ à Sun.
	7 31 12	49 8¾	21 55	82 3 55		199 55 0		6	C.	R. 1	Do.
	7 31 12	49 8¾	21 55	82 4 7		200 12 45		6	K.	D.	Do.
	7 31 12	49 8¾	21 55	82 2 27		199 6 45		6	B.	R. 5	Do.
	7 36 43	50 18¾	21 9⅙	82 2 7		200 5 0		6	C.	D.	Do.
	7 36 43	50 18¾	21 9⅙	82 1 30		199 41 45		6	K.	R. 5	Do.
	7 36 43	50 18¾	21 9⅙	82 2 12		200 3 30		6	B.	R. 1	Do.
	7 44 33	51 43⅓	19 42⅔	81 58 17		199 23 45		6	C.	R. 5	Do.
	7 44 33	51 43⅓	19 42⅔	81 59 7		199 51 15		6	K.	R. 1	Do.
	7 44 33	51 43⅓	19 42⅔	81 58 45		199 49 0		6	B.	D.	Do.
	7 44 33	51 43⅓	19 42⅔	81 58 32		199 32 15		6	T.	R. 3	Do.
	7 51 3	52 53⅔	18 36	81 56 15		199 21 0		6	C.	R. 5	Do.
	7 51 3	52 53⅔	18 36	81 57 12		200 5 15		6	K	D.	Do.
	7 51 3	52 53⅔	18 36	81 58 5		200 21 45		6	B.	R. 1	Do.
	7 51 3	52 53⅔	18 36	81 56 12		199 21 0		6	T.	R. 3	Do.
	7 56 35	53 51	17 37½	81 55 20		200 2 0		6	C.	D.	Do.
	7 56 35	53 51	17 37½	81 55 42		200 10 30		6	K.	R. 3	Do.
	7 56 35	53 51	17 37½	81 56 16		200 32 30		6	B.	R. 1	Do.
	7 56 35	53 51	17 37½	81 54 45		199 47 15		6	T.	R. 5	Do.
♃ —— 11.	2 34 14	34 10⅓	32 7 L	77 24 40	21 49	199 1 45	75½	6	C.	R. 1	☽ à Spica.
	2 34 14	34 10⅓	32 7	77 22 48		200 0 0		6	K.	D.	Do.
	2 47 16	31 6¾	33 59⅔	77 26 58		199 43 45		6	C.	D.	Do.
	2 47 16	31 6¾	33 59⅔	77 27 15		199 36 0		6	K.	R.	Do.
	3 1 2	41 35⅓	35 43½	31 46 52		199 22 0		6	C.	R.	☽ à Antares.
	3 1 2	41 35⅓	35 43½	31 36 23		199 44 0		6	K.	D.	Do.
	3 9 7	41 17⅔	36 38⅔	31 40 10		199 5 0		6	C.	D.	Do.
	3 9 7	41 17⅔	36 38⅔	31 49 27		199 18 45		6	K.	R.	Do.
	7 16 12	46 36⅔	31 34	71 18 2	21 49	200 46 0	75	6	C.	R. 1	☽ à Sun.
	7 16 12	46 36⅔	31 34	71 17 8		199 46 15		6	K.	D.	Do.
	7 24 30	48 16	30 33	71 14 43		199 45 0		6	C.	D.	Do.
	7 24 30	48 16	30 33	71 14 57		199 55 0		6	K.	R. 1	Do.
	7 30 42	49 28⅙	29 40⅔	71 13 32		200 35 30		6	C.	R. 5	Do.
	7 30 42	49 28⅙	29 40⅔	71 11 32		199 35 30		6	K.	R. 3	Do.
	7 36 12	50 31½	28 51½	71 11 35		199 36 30		6	C.	R. 3	Do.
	7 36 12	50 31½	28 51½	71 12 5		199 59 0		6	K.	R. 5	Do.
♀ —— 12.	2 39 23	42 1⅔	26 0⅔ L	43 25 22	21 49	199 17 15	74½	6	C	R.	☽ à Antares.
	2 39 23	42 1⅔	26 0⅔	43 24 37		199 28 30		6	K.	D.	Do.
	2 48 35	42 13	27 35	43 27 0		199 49 30		6	C.	D.	Do.
	2 48 35	42 13	27 35	43 26 47		199 55 30		6	K.	R.	Do.
	2 59 35	41 46⅙	29 1⅓	43 30 35		200 3 45		6	C.	R. 3	Do.
	2 59 35	41 46⅙	29 1⅓	43 31 50		199 46 45		6	K.	R. 1	Do.
	3 8 26	41 9	30 25⅓	43 33 15		199 58 0		6	C.	R. 3	Do.
	3 8 26	41 9	30 25⅓	43 33 50		199 40 30		6	K.	R. 1	Do.
	8 3 8	55 42	32 33	60 10 45	21 49	200 11 45	77	6	C.	R. 1	☽ à Sun.
	8 3 8	55 42	32 33	60 10 30		200 3 45		6	K.	D.	Do.
	8 7 37	56 30⅔	32 1⅙	60 9 15		200 5 15		6	C.	D.	Do.
	8 7 37	56 30⅔	32 1⅙	60 9 25		200 13 15		6	K.	R. 1	Do.
♄ —— 13.	5 35 51	25 48	42 59⅔ U	49 47 27	21 49	199 59 15	76½	6	C.	D.	Do.
	5 35 51	25 48	42 59⅔	49 47 35		199 55 0		6	K.	R. 1	Do.
	5 42 46	27 22	43 24½	49 45 45		199 53 0		6	C.	R.	Do.
	5 42 46	27 22	43 24½	49 45 32		200 15 30		6	K.	D.	Do.
	8 3 36	56 7⅔	39 51	49 11 25	21 49	200 1 15	77½	6	C.	R.	Do.

1779.	Time per Watch N° 1.	Altitude of the ☉'s L. L. or ✱.	Moon's Altitude.	Distance of the ☽'s Limb from the ☉'s or ✱.	Latitude of the Ship.	Longitude East of Greenwich.	Therm.	N° of Obs.	Observers.	Sextant used.	Objects.
	H. ′ ″	° ′	° ′	° ′ ″	° ′	° ′ ″	°				
♄ March 13	8 3 36	56 7⅔	39 51 U	49 10 50	21 49 N	200 18 15 E	77½	6	K.	D.	☽ à Sun.
	8 10 35	57 16	39 5	49 8 32		200 6 45		6	C.	R. 3	Do.
	8 10 35	57 16	39 5	49 8 37		199 59 45		6	K.	R. 1	Do.
	8 16 38	58 16½	38 27½	49 6 55		200 19 0		6	C.	D.	Do.
	8 16 38	58 16½	38 27½	49 7 30		200 18 30		6	K.	R. 3	Do.
☉ —— 21.	17 17 18	50 3½	21 54⅙ L	28 13 12	30 34	193 18 30	75	6	C.	R. 1	☽ à Aldebar.
	17 17 18	50 3½	21 54⅙	28 12 7		192 49 45		6	K.	D.	Do.
	17 26 38	47 57⅓	19 52⅔	28 8 32		193 20 0		6	C.	D.	Do.
	17 26 38	47 57⅓	19 52⅔	28 7 10		192 43 30		6	K.	R.	Do.
	17 35 59	46 53⅙	17 45⅔	28 2 20		192 43 30		6	C.	R.	Do.
	17 35 59	46 53⅙	17 45⅔	28 3 2		193 2 0		6	K.	D.	Do.
	17 45 5	43 39½	15 37½	27 57 42		192 50 15		6	C.	D.	Do.
	17 45 5	43 39½	15 37½	27 56 40		192 22 45		6	K.	R.	Do.
☽ —— 22.	10 54 20	67 20	55 23 U	48 35 31	20 29½	190 24 30	80	6	C.	R. 1	☽ à Sun.
	10 54 20	67 20	55 23	48 35 27		190 25 15		6	K.	D.	Do.
	10 54 20	67 20	55 23	48 35 17		190 20 30		6	B.	R. 3	Do.
	11 1 19	66 32⅔	57 1⅔	48 38 10		190 3 0		6	C.	D.	Do.
	11 1 19	66 32⅔	57 1⅔	48 37 15		190 36 30		6	K.	R. 1	Do.
	11 1 19	66 32⅔	57 1⅔	48 38 11		190 16 45		6	B.	R. 5	Do.
	11 7 18	65 43⅓	58 25⅓	48 40 35		190 0 30		6	C.	R. 5	Do.
	11 7 18	65 43⅓	58 25⅓	48 39 57		190 20 45		6	K.	R. 3	Do.
	11 7 18	65 43⅓	58 25⅓	48 41 27		189 55 45		6	B	D.	Do.
	11 11 30	64 58⅔	59 35⅔	48 42 55		189 34 30		6	C.	R. 3	Do.
	11 11 30	64 58⅔	59 35⅔	48 42 0		189 58 15			K.	R. 5	Do.
	11 11 30	64 58⅔	59 35⅔	48 41 20		190 19 45		6	B.	R. 1	Do.
	17 18 12	81 3⅔	35 50¾ L	58 12 45	20 26	191 17 45	77	6	C.	R. 1	☽ à Pollux.
	17 18 12	81 3⅔	35 50¾	58 11 52		190 54 0		6	K.	D.	Do.
	17 27 22	81 40⅙	33 49⅔	58 7 47		190 53 45		6	C.	D.	Do.
	17 27 22	81 40⅙	33 49⅔	58 7 37		190 49 15		6	K.	R.	Do.
	17 39 36	82 0	31 3	58 2 12		190 55 0		6	C.	R. 3	Do.
	17 39 36	82 0	31 3	58 2 0		190 49 45		6	K.	R. 3	Do.
	17 48 47	81 39	29 2	57 57 27		190 33 15		6	C.	R. 3	Do.
	17 48 47	81 39	29 2	57 57 27		190 33 15		6	K.	R. 5	Do.
☿ —— 24.	13 8 4	47 3¾	56 50⅙ U	75 40 52	19 56	185 7 0	76	6	C.	R. 1	☽ à Sun.
	13 8 4	47 3¾	56 50⅙	75 40 2		185 32 45		6	K.	D.	Do.
	13 8 4	47 3¾	56 50⅙	75 41 3		185 3 0		6	B.	R. 3	Do.
	13 15 39	45 21¼	58 40	75 43 15		185 8 15		6	C.	D.	Do.
	13 15 39	45 21¼	58 40	75 43 22		185 19 45		6	K.	R. 1	Do.
	13 15 39	45 21¼	58 40	75 43 45		185 36 45		6	B.	R. 5	Do.
	13 20 32	44 13⅙	59 45½	75 46 5		184 47 15		6	C.	R. 5	Do.
	13 20 32	44 13⅙	59 45½	75 45 30		185 3 30		6	K.	R. 3	Do.
	13 20 32	44 13⅙	59 45½	75 45 20		185 8 0		6	B.	R. 1	Do.
	13 25 11	43 12¾	60 48⅔	75 47 55		186 17 30		6	C.	R. 3	Do.
	13 25 11	43 12¾	60 48⅔	75 46 40		185 17 30		6	K.	R. 5	Do.
	13 25 11	43 12¾	60 48⅔	75 46 17		185 27 45		6	B.	D.	Do.
	17 35 24	80 56⅔	62 46¾ L	29 49 45	19 55	186 10 30	75	6	C.	R. 1	☽ à Pollux.
	17 35 24	80 56⅔	62 46¾	29 49 25		186 4 0		6	K.	D.	Do.
	17 35 24	80 56⅔	62 46¾	29 47 0		186 4 0		6	B.	R. 3	Do.
	17 44 13	81 24⅓	60 50⅔	29 45 50		185 47 15		6	C.	D.	Do.
	17 44 13	81 24⅓	60 50⅔	29 44 42		185 26 30		6	K.	R. 1	Do.
	17 44 13	81 24⅓	60 50⅔	29 49 30		186 4 0		6	B.	R. 5	Do.
	18 10 0	80 30	54 46½	29 38 0		186 31 15		6	C.	R. 5	Do.

1779.	Time per Watch N° 1.	Altitude of the ☉'s L.L. or ✱.	Moon's Altitude.	Distance of the ☽'s Limb from the ☉'s or ✱.	Latitude of the Ship.	Longitude East of Greenwich.	Therm.	N° of Obs.	Observers.	Sextant used.	Objects.
	H. ′ ″	° ′	° ′	° ′ ″	° ′	° ′ ″	°				
♃ March 24	18 10 0	80 30	54 46½ L	29 35 54	19 55 N	185 33 30 E	75	6	K.	R. 3	☽ à Pollux.
	18 10 0	80 30	54 46½	29 34 30		185 50 0		6	B.	D.	Do.
	18 20 10	79 14⅓	52 32⅔	29 32 47		186 6 30		6	C.	R. 3	Do.
	18 20 10	79 14⅓	52 32⅔	29 31 7		185 28 0		6	K.	R. 5	Do.
	18 20 10	79 14⅓	52 32⅔	29 35 32		185 53 0		6	B.	R. 1	Do.
	18 32 8	64 37⅓	50 35	65 30 35		186 19 15		6	C.	R. 1	☽ à Regulus.
	18 32 8	64 37⅓	50 35	65 30 15		186 11 0		6	K.	D.	Do.
	18 32 8	64 37⅓	50 35	65 31 2		186 13 45		6	B.	R. 3	Do.
	18 44 18	67 32⅔	47 36	65 25 27		186 12 45		6	C.	D.	Do.
	18 44 18	67 32⅔	47 36	65 24 55		186 2 15		6	K.	R. 1	Do.
♃——25.	13 50 24	38 55	51 48 U	89 13 21	19 57	183 24 15	77½	7	C.	R. 1	☽ à Sun.
	13 50 24	38 55	51 48	89 11 22		184 23 0		7	K.	D.	Do.
	13 50 24	38 55	51 48	89 12 13		183 50 30		7	B.	R. 3	Do.
	13 56 5	37 42⅙	52 52¾	89 14 2		184 7 30		6	C.	D.	Do.
	13 56 5	37 42⅙	52 52¾	89 13 45		183 59 15		6	K.	R. 1	Do.
	13 56 5	37 42⅙	52 52¾	89 15 0		183 36 45		6	B.	R. 5	Do.
	14 1 59	36 14½	54 9¾	89 18 2		183 12 45		6	C.	R. 5	Do.
	14 1 59	36 14½	54 9¾	89 17 30		183 25 15		6	K.	R. 3	Do.
	14 1 59	36 14½	54 9¾	89 17 35	19 57½	183 18 15	77½	6	B.	R. 1	Do.
	14 5 33	35 28¾	55 0⅔	89 18 27		183 12 45		6	C.	R. 5	Do.
	14 5 33	35 28¾	55 0⅔	89 18 40		183 25 15		6	K.	R. 3	Do.
	14 5 33	35 28¾	55 0⅔	89 17 5		183 18 15		6	B.	R. 1	Do.
	14 11 55	34 2	56 14¾	89 20 45		183 35 30		6	C.	R. 3	Do.
	14 11 55	34 2	56 14¾	87 19 15		184 14 45		6	K.	R. 5	Do.
	14 11 55	34 2	56 14¾	89 21 50		183 4 0		6	B.	D.	Do.
	14 19 45	32 11⅓	58 1⅓	89 24 0		183 19 30		6	K.	D.	Do.
	14 19 45	32 11⅓	58 1⅓	89 22 35	21 45	183 19 30	75½	6	B.	R. 5	Do.
	17 45 34	53 32⅔	74 58¾ L	51 31 25		184 45 30		6	C.	R. 1	☽ à Regulus.
	17 45 34	53 32⅔	74 58¾	51 30 50		184 30 45		6	K.	D.	Do.
	17 45 34	53 32⅔	74 58¾	51 30 52		184 45 30		6	B.	R. 3	Do.
	17 45 34	53 32⅔	74 58¾	51 29 42		183 55 30		6	R.	R. 5	Do.
	17 54 13	55 34⅙	73 12½	51 28 2		184 53 15		6	C.	D.	Do.
	17 54 13	55 34⅙	73 12½	51 26 52		184 23 30		6	K.	R. 1	Do.
	17 54 13	55 34⅙	73 12½	51 27 40		184 43 45		6	B.	R. 5	Do.
	17 54 13	55 34⅙	73 12½	51 26 37		184 17 0		6	R.	R. 3	Do.
	18 2 22	57 22½	71 27⅔	51 25 22		184 54 30		6	C.	R. 5	Do.
	18 2 22	57 22½	71 27⅔	51 24 27		184 33 15		6	K.	R. 3	Do.
	18 2 22	57 22½	71 27⅔	51 25 15		184 55 45		6	B.	D.	Do.
	18 2 22	57 22½	71 27⅔	51 24 15		184 30 15		6	R.	R. 1	Do
	18 11 57	59 44⅓	69 15	51 21 5		184 10 15		6	C.	R. 3	Do.
	18 11 57	59 44⅓	69 15	51 20 30		184 31 0		6	K.	R. 5	Do.
	18 11 57	59 44⅓	69 15	51 21 32		184 48 45		6	B	R. 1	Do.
	18 11 57	59 44⅓	69 15	51 19 42		184 0 30		6	R	D.	Do.
	18 43 2	33 19¾	62 29½	29 48 15		184 12 45		6	T.	D.	☽ à Aldebar.
	18 43 2	33 19¾	62 29½	29 47 0		184 44 30		6	G.	R. 1	Do.
	18 49 44	31 36⅔	61 1¼	29 49 55		184 44 30		6	P.	R. 1	Do.
	18 49 44	31 36⅔	61 1¼	29 51 20		183 50 45		6	K.	D.	Do.
	18 54 57	30 26½	59 55	29 52 52		184 1 0		6	P.	D.	Do.
	18 54 57	30 26½	59 55	29 51 17		184 41 0		6	K.	R. 1	Do.
♀——26.	13 15 21	47 50⅙	29 34	102 14 25	19 48½	183 15 20	79½	6	C.	R. 1	☽ à Sun.
	13 15 21	47 50⅙	29 34	102 14 5		183 21 15		6	K.	D.	Do.
	13 15 21	47 50⅙	29 34	102 14 40		183 13 15		6	B.	R. 3	Do.

1779.	Time per Watch N° 1.	Altitude of the ☉'s L. L. or ✱.	Moon's Altitude.	Distance of the ☽'s Limb from the ☉'s, or ✱.	Latitude of the Ship.	Longitude East of Greenwich.	Therm.	N° of Obs.	Observer.	Sextant used.	Objects.
	H. ′ ″	° ′	° ′	° ′ ″	° ′	° ′ ″	°				
♀ March 26	13 20 9	46 45⅔	30 39⅙ U	102 16 20	19 48½ N	183 21 45 E	79½	6	G.	D.	☽ à Sun.
	13 20 9	46 45⅔	30 39⅙	102 16 5		183 28 45		6	R.	R. 1	Do.
	13 20 9	46 45⅔	30 39⅙	102 18 45		182 17 45		6	B.	R. 5	Do.
	13 28 53	44 49⅙	32 27	102 19 35		183 32 0		6	T.	D.	Do.
	13 28 53	44 49⅙	32 27	102 21 17		182 50 30		6	P.	R. 1	Do.
	13 34 39	43 32	33 47½	102 22 35		183 27 15		6	T.	R. 1	Do.
	13 34 39	43 32	33 47½	102 22 10		183 38 15		6	P.	D.	Do.
	13 42 26	41 46⅙	35 27	102 27 7		182 49 15		6	Ta.	R. 5	Do.
	13 42 26	41 46⅙	35 27	102 24 25		183 59 0		6	G.	D.	Do.
	13 50 26	40 5⅓	37 6	102 29 5		183 31 15		6	T.	R. 3	Do.
	13 50 26	40 5⅓	37 6	102 29 50		183 10 30		6	G.	R. 1	Do.
	17 48 34	54 3⅓	85 16	37 10 20	19 48⅔	183 26 15	77	6	C.	R. 1	☽ à Regulus.
	17 48 34	54 3⅓	85 16	37 9 52		183 14 30		6	K.	D.	Do.
	17 48 34	54 3⅓	85 16	37 8 55		182 50 0		6	B.	R. 3	Do.
	17 58 12	56 18⅙	84 56⅙	37 7 55		181 56 15		6	C.	D.	Do.
	17 58 12	56 18⅙	84 56⅙	37 5 42		182 53 0		6	K.	R. 1	Do.
	18 6 51	41 41½	83 54⅔	43 50 42		183 12 0		6	C.	R. 1	Do.
	18 6 51	41 41½	83 54⅔	43 50 25		183 19 45		6	K.	D.	Do.
	18 6 51	41 41½	83 54⅔	43 50 35		182 54 15		6	B.	R. 3	Do.
	18 14 31	39 56	82 3⅔	43 52 42		183 22 30		6	C.	D.	Do.
	18 14 31	39 56	82 3⅔	43 52 57		183 22 30		6	K.	R.	Do.
	18 25 52	37 26⅙	79 55	43 57 25		183 16 0		6	T	R. 3	Do.
	18 25 52	37 26⅙	79 55	43 56 47		183 32 0		6	P.	D.	Do.
	18 25 52	37 26⅙	79 55	43 55 45		183 58 30		6	G.	R. 1	Do.
	18 36 32	65 9⅔	77 50⅓	36 53 30		183 9 45		6	T.	R. 3	Do.
	18 36 32	65 9⅔	77 50⅓	36 53 5		182 53 30		6	P	D.	Do.
	18 48 36	67 52⅔	75 16⅔	36 46 57		182 54 15		6	G.	R. 1	Do.
♄ —— 27.	13 57 8	39 27¾	24 20	115 45 57	19 48½	182 34 0	80	6	C.	D.	☽ à Sun.
	13 57 8	39 27¾	24 20	115 47 10		182 47 45		6	K.	R. 1	Do.
	13 57 8	39 27¾	24 20	115 48 53		182 1 45		6	B.	R. 3	Do.
	14 2 41	38 12½	25 35⅙	115 49 2		182 7 0		6	C.	R. 1	Do.
	14 2 41	38 12½	25 35⅙	115 50 17		182 35 45		6	K.	D.	Do.
	14 2 41	38 12½	25 35⅙	115 51 42		181 56 45		6	B.	R. 3	Do.
	14 19 49	34 12⅙	29 21⅓	115 59 45		182 51 30		6	T.	D	Do.
	14 19 49	34 12⅙	29 21⅓	115 59 52		182 39 45		6	P.	R. 3	Do.
	14 19 49	34 12⅙	29 21⅓	115 58 10		182 20 15		6	G.	R. 1	Do.
	14 40 45	29 24⅓	33 57⅓	116 8 45		181 40 30		6	T.	R. 3	Do.
	14 40 45	29 24⅓	33 57⅓	116 7 52		181 58 15		6	P.	R. 1	Do.
	14 40 45	29 24⅓	33 57⅓	116 5 42		183 4 0		6	G.	D.	Do.
♃ April 8.	8 17 30	37 0⅓	20 20½	90 38 7	31 51	167 46 45	61	6	C.	R. 1	Do.
	8 17 30	37 0⅓	20 20½	90 36 37		166 57 0		6	K.	D.	Do.
	8 17 30	37 0⅓	20 20½	90 37 2		167 33 0		6	B.	R. 3	Do.
	8 25 29	38 37¾	21 23	90 33 55		166 46 0		6	C.	D.	Do.
	8 25 29	38 37¾	21 23	90 34 12		167 47 0		6	K.	R. 1	Do.
	8 25 29	38 37¾	21 23	90 35 52		167 28 30		6	B.	R. 5	Do.
	8 30 57	39 42⅙	20 42⅙	90 33 12		167 18 0		6	C.	R. 5	Do.
	8 30 57	39 42⅙	20 42⅙	90 33 39		167 32 45		6	K.	R. 3	Do.
	8 30 57	39 42⅙	20 42⅙	90 33 5		167 13 15		6	B.	R. 1	Do.
	8 39 34	41 26¾	19 33¾	90 30 12		167 46 45		6	C.	R. 3	Do.
	8 39 34	41 26¾	19 33¾	90 30 35		167 25 15		6	K.	R. 5	Do.
	8 39 34	41 26¾	19 33¾	90 28 57		166 31 15		6	B.	D.	Do.
♂ April 20	15 44 31	29 17⅙	61 43 L	46 24 2	49 54	161 19 0	34	6	C.	D.	Do.

1779.	Time per Watch N° 1.	Altitude of the ☉'s L. L. or ✱.	Moon's Altitude.	Distance of ☽'s Limb from the ☉'s, or ✱.	Latitude of the Ship.	Longitude East of Greenwich.	Therm.	N° of Obs.	Observers.	Sextant used.	Objects.
	H. ′ ″	° ′	° ′	° ′ ″	° ′	° ′ ″	°				
♂ April 20.	15 44 31	29 17 1/6	61 43 L	46 23 0	49 54 N	161 44 15 E	34	6	K.	R. 1	☽ à Sun.
	15 44 31	29 17 1/6	61 43	46 24 15		161 25 15		6	B.	R. 1	Do.
	15 50 34	28 19 1/6	61 18 1/2	46 25 47		161 35 30		6	C.	R. 1	Do.
	15 50 34	28 19 1/6	61 18 1/2	46 26 7		161 25 45		6	K.	D.	Do.
	15 50 34	28 19 1/6	61 18 1/2	46 26 0		161 29 45		6	B.	R. 5	Do.
	15 55 17	27 36 1/6	61 7 2/3	46 29 0		160 58 30		6	C.	R. 3	Do.
	15 55 17	27 36 1/6	61 7 2/3	46 28 0		161 25 15		6	K.	R. 5	Do.
	15 55 17	27 36 1/6	61 7 2/3	46 28 35		161 9 30		6	B.	D.	Do.
	16 0 39	26 46 2/3	60 50 1/6	46 30 12		161 17 45		6	C.	R. 5	Do.
	16 0 39	26 46 2/3	60 50 1/6	46 30 45		161 5 0		6	K.	R. 3	Do.
	16 0 39	26 46 2/3	60 50 1/6	46 30 57		161 2 0		6	B.	R. 1	Do.
☿ —— 21.	13 48 5	44 30	54 3 U	59 10 57	50 40	160 51 15	33 1/2	6	C.	R. 1	Do.
	13 48 5	44 30	54 3	59 9 45		161 23 45		6	B	R. 3	Do.
	13 48 5	44 30	54 3	59 9 7		161 41 0		6	K.	D.	Do.
	13 52 55	43 59 1/6	54 42 1/3	59 11 20		161 35 45		6	C.	D.	Do.
	13 52 55	43 59 1/6	54 42 1/3	59 12 2		161 16 30		6	B.	R. 5	Do.
	13 52 55	43 59 1/6	54 42 1/3	59 11 12		161 39 30		6	K.	R. 1	Do.
	13 56 48	43 30 1/2	55 12	59 13 55		161 7 45		6	C.	R. 3	Do.
	13 56 48	43 30 1/2	55 12	59 14 17		160 57 45		6	B.	R.	Do.
	13 56 48	43 30 1/2	55 12	59 13 17		161 25 45		6	K.	B.	Do.
	14 0 55	43 3 1/3	55 43	59 16 22		161 47 0		6	C.	R. 5	Do.
	14 0 55	40 3 2/3	55 43	59 15 22		161 17 30		6	B.	D.	Do.
	14 0 55	40 3 2/3	55 43	59 15 22		161 17 35		6	K.	B. 3	Do.
	20 4 14	52 10 2/3	38 59 L	53 39 0		162 44 30		6	C.	R. 1	☽ à Regulus.
	20 4 14	52 10 2/3	38 59	53 37 17		162 39 45		6	K.	D.	Do.
	20 4 14	52 10 2/3	38 59	53 36 40		161 45 45		6	B.	R. 3	Do.
	20 14 52	52 7 2/3	37 19 1/3	53 33 15		162 36 45		6	C.	D.	Do.
	20 14 52	52 7 2/3	37 19 1/3	53 32 30		162 17 45		6	K.	R. 1	Do.
	20 14 52	52 7 2/3	37 19 1/3	53 31 20		162 2 15		6	B.	R. 5	Do.
	20 23 31	51 52 1/2	35 52	53 27 2		162 2 30		6	B.	D.	Do.
	20 23 31	51 52 1/2	35 52	53 27 22		161 53 45		6	K.	R. 3	Do.
	20 32 12	51 34	34 32 1/2	53 23 41		162 17 15		6	C.	R. 3	Do.
	20 32 12	51 34	34 32 1/2	53 24 20		162 38 30		6	K.	D.	Do.
	20 32 12	51 34	34 32 1/2	53 23 40		162 19 45		6	B.	R. 1	Do.
	Apparent Time.	The Watch N° 1. stopped on the 26th, therefore the Apparent Times are set down to the following Observations.									
♃ June 17.	5 3 1	27 3	51 7 2/3	40 13 40	52 48 1/2	159 11 45	48	6	C.	D.	☽ à Sun.
	5 3 1	27 3	51 7 2/3	40 7 58		159 32 15		6	K.	R. 1	Do.
	5 3 1	27 3	51 7 2/3	40 8 50		159 7 30		6	B.	R. 3	Do.
	5 9 31	26 5	50 19 2/3	40 10 45		159 36 0		6	C.	R. 1	Do.
	5 9 31	26 5	50 19 2/3	40 11 7		159 36 45		6	K.	D.	Do.
	5 9 31	26 5	50 19 2/3	40 10 26		159 54 30		6	B.	R. 5	Do.
	5 19 31	24 33	49 8 1/2	40 15 57		152 20 30		6	C.	R. 5	Do.
	5 19 31	24 33	49 8 1/2	40 17 10		158 48 45		6	K.	R. 3	Do.
	5 19 31	24 33	49 8 1/2	40 16 5		159 17 0		6	B.	R. 1	Do.
	5 40 8	21 2 2/3	46 30 2/3	40 25 32		159 3 30		6	C.	R. 3	Do.
	5 40 8	21 2 2/3	46 30 2/3	40 25 27		159 5 45		6	K.	R. 5	Do.
☉ —— 20.	5 40 8	21 2 2/3	46 30 2/3	40 25 42		158 59 30		6	B.	D.	Do.
	4 8 35	34 48 2/3	40 35 2/3 U	80 13 55	54 25	163 16 15	59	6	C.	D.	Do.
	4 8 35	34 48 2/3	40 35 2/3	80 14 20		163 8 30		6	K.	R. 1	Do.
	4 12 34	34 14 1/3	40 46 1/6	80 15 32		163 14 45		6	C.	R. 1	Do.

1779.	Apparent Time.	Altitude of the ☉'s L. L. or ✱.	Moon's Altitude.	Distance of the ☽'s Limb from the ☉'s or ✱.	Latitude of the Ship.	Longitude East of Greenwich.	Therm.	N° of Obs.	Observers.	Sextant used.	Objects.
	° ′ ″	° ′	° ′	° ′ ″	° ′	° ′ ″	°				
☉ June 20.	4 12 34	34 14½	40 46½ L	80 15 5	54 25 N	163 30 45 E	58	6	K.	D.	☽ à Sun.
	4 16 15	33 43½	40 58½	80 16 52		163 20 0		6	C.	D.	Do.
	4 16 15	33 43½	40 58½	80 17 15		163 14 45		6	K.	R. 1	Do.
	4 20 46	33 3½	41 12½ U	80 18 42	54 35	163 19 0	59	6	K.	R. 1	Do.
	4 20 46	33 3½	41 12½	80 19 2		163 10 15		6	C.	D.	Do.
	4 33 12	31 16½	41 49½	80 24 12		163 17 0		6	C.	R. 1	Do.
	4 33 12	31 16½	41 49½	80 22 15		164 1 30		6	K.	R. 3	Do.
	4 36 57	30 43½	42 0½	80 24 10		163 51 15		6	C.	R. 3	Do.
	4 36 57	30 43½	42 0½	80 25 25		163 16 30		6	K.	R. 5	Do.
	5 53 23	19 51½	43 4½	80 55 15	55 53	163 38 30		6	T.	D.	Do.
	5 53 23	19 51½	43 4½	80 56 5		163 5 0		6	B	R. 3	Do.
	5 53 23	19 51½	43 4½	80 56 15		163 0 30		6	P.	R. 1	Do.
	5 59 22	19 0½	42 52½	80 58 32		163 0 45		6	T.	R. 1	Do.
	5 59 22	19 0½	42 52½	80 57 42		163 23 45		6	B.	D.	Do.
	5 59 22	19 0½	42 52½	80 57 37		163 26 30		6	P.	R. 3	Do.
	6 4 53	18 14	42 52½	81 0 20		163 10 0		6	T.	R. 3	Do.
	6 4 53	18 14	42 52½	81 0 55		163 48 45		6	B.	R. 1	Do.
	6 4 53	18 14	42 52½	80 59 27		163 34 45		9	G.	D.	Do.
	6 11 6	17 22½	42 35	81 3 0		163 3 45		6	P.	D.	Do.
	6 11 6	17 22½	42 35	81 3 32		162 48 45		6	B.	R. 3	Do.
	6 11 6	17 22½	42 35	81 3 47		162 41 45		6	G.	R. 1	Do.
☽ —— 21.	2 35 39	46 47	21 32½	92 14 45	55 55¼	163 55 0	54	6	C.	R. 1	Do.
	2 35 39	46 47	21 32½	92 14 30		163 52 15		6	K.	D.	Do.
	2 41 16	46 7½	22 12	92 18 12		163 38 30		6	C.	D.	Do.
	2 41 16	46 7½	22 12	92 17 50		164 11 15		6	K.	R. 1	Do.
	2 55 5	44 18½	23 45	92 24 17		164 24 30		6	C.	R. 1	Do.
	2 55 5	44 18½	23 45	92 23 33		163 50 30		6	K.	R. 3	Do.
	3 1 5	43 42½	24 26½	92 25 48		164 2 45		6	C.	R. 3	Do.
	3 1 5	43 42½	24 26½	92 26 59		163 28 30		6	K.	R. 5	Do.
	3 18 35	41 21½	26 18½	92 32 27		164 31 45		6	C.	R. 4	Do.
	3 18 35	41 21½	26 18½	92 34 28		163 37 0		6	K.	B.	Do.
	3 23 40	40 41	26 49½	92 36 45		163 30 45		6	C.	B.	Do.
	3 23 40	40 41	26 49½	92 34 55		164 23 45		6	K.	R. 4	Do.
	3 41 25	38 19½	28 37	92 42 40		164 19 30		6	T.	D.	Do.
	3 41 25	38 19½	28 37	92 43 27		163 57 0		6	P.	R. 1	Do.
	3 41 25	38 19½	28 37	92 44 34		163 29 15		6	G.	R. 5	Do.
	3 48 11	37 27½	29 13½	92 47 22	55 57	163 26 45	55	6	T.	R. 5	Do.
	3 48 11	37 27½	29 13½	92 45 52		164 11 45		6	P.	D.	Do.
	3 48 11	37 27½	29 13½	92 46 22		163 57 30		6	G.	R. 1	Do.
	3 48 11	37 27½	29 13½	92 46 8		164 4 0		6	T.	R. 3	Do.
	3 56 6	36 20½	29 56½	92 49 17		164 7 0		6	T.	R. 1	Do.
	3 56 6	36 20½	29 56½	92 49 20		164 5 45		6	P.	R. 3	Do.
	3 56 6	36 20½	29 56½	92 49 10		164 10 5		6	G.	D.	Do.
	3 56 6	36 20½	29 56½	92 50 52		163 19 15		6	T.	R. 5	Do.
	4 4 36	35 10½	30 40½	92 54 42		163 13 0		6	P.	R. 5	Do.
	4 4 36	35 10½	30 40½	92 53 25		163 50 15		6	G.	R. 1	Do.
	4 4 36	35 10½	30 40½	92 53 15		163 55 15		6	T.	D.	Do.
♂ —— 22.	6 34 0	14 56	29 31½	106 8 30	56 5	164 46 30	56	2	C.	R. 1	Do.
	6 34 0	14 56	29 31½	106 8 30		164 46 30		2	K.	D.	Do.
	6 34 0	14 56	29 31½	106 8 35		164 44 0		2	B.	R. 3	Do.
	6 44 14	13 25½	29 38	106 12 45		164 23 30		2	C.	R. 1	Do.
	6 44 14	13 25½	29 38	106 12 25		164 37 15		2	K.	D.	Do.

1779.	Apparent Time.	Altitude of the ☉'s L. L. or ✱.	Moon's Altitude.	Distance of the ☽'s Limb from the ☉'s, or ✱.	Latitude of the Ship.	Longitude East of Greenwich.	Therm.	No of Obs.	Observers.	Sextant used.	Objects.
	H. ′ ″	° ′	° ′	° ′ ″	° ′	° ′ ″	°				
♂ June 22.	6 44 14	13 25 2/3	29 38 L	106 12 20	56 5 N	164 37 15 E	56	2	B.	R. 3	☽ à Sun.
♀ Aug. 6.	18 53 52	20 56 2/3	50 7 1/2 U	70 58 27	59 40	183 46 30	57	6	C.	D.	Do.
	18 53 52	20 56 2/3	50 7 1/2	70 59 52		184 25 45		6	K.	R. 3	Do.
	18 59 4	21 35 1/3	50 8 2/3	70 58 5		184 32 15		6	C.	R. 3	Do.
	18 59 4	21 35 2/3	50 8 2/3	70 56 35		183 43 30		6	K.	D.	Do.
	19 10 22	22 59 2/3	50 6	70 54 20		184 58 45		6	C.	R. 5	Do.
	19 10 22	22 59 2/3	50 6	70 53 42		184 41 15		6	K.	R. 1	Do.
	19 14 19	23 28 2/3	50 4	70 52 15		184 46 45		6	C.	R. 1	Do.
	19 14 19	23 28 2/3	50 4	70 51 40		184 26 45		6	K.	R. 5	Do.
	20 51 3	34 53 1/2	45 46 1/3	70 10 52		184 32 45		6	C.	D.	Do.
	20 51 3	34 53 1/2	45 46 1/3	70 10 10		184 14 0		6	K.	R. 3	Do.
	20 54 53	35 14 2/3	45 31 1/3	70 9 52		184 36 45		6	C.	R. 3	Do.
	20 54 53	35 14 2/3	45 31 1/3	70 8 37		184 1 45		6	K.	D.	Do.
	21 7 37	36 37 2/3	44 34 2/3	70 3 57		184 21 15		6	C.	R. 5	Do.
	21 7 37	36 37 2/3	44 34 2/3	70 3 40		184 5 45		6	K.	R. 1	Do.
	21 12 34	37 12 2/3	44 8 1/3	70 1 50		184 22 15		6	C.	R. 1	Do.
	21 12 34	37 12 2/3	44 8 1/3	70 1 27		184 3 15		6	K.	R. 5	Do.
	21 30 28	38 56 1/6	42 33 1/6	69 55 40		185 5 30		6	Ta.	R. 1	Do.
	21 30 28	38 56 1/6	42 33 1/6	69 54 0		184 18 45		6	G.	R. 5	Do.
	21 30 28	38 56 1/6	42 33 1/6	69 54 45		184 39 45		6	Ta.	R. 3	Do.
	21 30 28	38 56 1/6	42 33 1/6	69 54 2		184 29 15		6	P.	D.	Do.
	21 37 31	39 36 2/3	41 52 1/6	69 50 25		184 4 45		6	T.	D.	Do.
	21 37 31	39 36 2/3	41 52 1/6	69 49 35		183 42 0		6	G.	R. 3	Do.
	21 37 31	39 36 2/3	41 52 1/6	69 51 52		184 45 45		6	Ta.	R. 5	Do.
	21 37 31	39 36 2/3	41 52 1/6	69 51 55		184 48 15		6	P.	R. 1	Do.
	21 45 8	40 17 1/2	41 7 1/2	69 47 55		184 28 0		6	Ta.	R. 5	Do.
	21 45 8	40 17 1/2	41 7 1/2	69 48 22		184 40 45		6	G.	R. 1	Do.
	21 45 8	40 17 1/2	41 7 1/2	69 47 30		184 16 30		6	Ta.	D.	Do.
	21 45 8	40 17 1/2	41 7 1/2	69 47 22		184 12 45		6	P.	R. 3	Do.
	21 53 9	40 59 1/2	40 18 1/2	69 43 37		184 9 15		6	Ta.	R. 3	Do.
	21 53 9	40 59 1/2	40 16 1/2	69 42 12		183 30 0		6	G.	D.	Do.
	21 53 9	40 59 1/2	40 18 1/2	69 41 25		183 8 15		6	Ta.	R. 1	Do.
	21 53 9	40 59 1/2	40 18 1/2	69 43 52		184 16 45		6	P.	R. 5	Do.
♄ —— 7.	13 42 2	40 57 1/2	18 36 1/3 L	40 52 57	59 7	182 34 0	44	6	B.	R. 3	☽ à x Arietis.
	13 42 2	40 57 1/2	18 36 1/3	40 53 3[illegible]		182 18 30		6	K.	D.	Do.
	13 59 18	42 5 1/2	20 48	41 2 25		182 35 15		8	B.	D.	Do.
	13 59 18	42 5 1/2	20 48	41 5 0		181 21 0		8	K.	R. 3	Do.
	14 9 48	44 0 1/2	22 1 1/2	41 13 0		180 28 40		6	B.	R. 3	Do.
	14 9 48	44 0 1/2	22 1 1/2	41 10 12		181 43 45		6	K.	D.	Do.
♂ —— 17.	2 16 47	41 34 1/2	20 41 U	68 57 57	53 41	168 4 0	57	6			☽ à Sun.
	2 16 47	41 34 1/2	20 41	68 57 32		168 17 0		6			Do.
	2 16 47	41 34 1/2	20 41	68 57 58		168 4 15		6			Do.
	2 21 45	40 59 1/2	21 1 1/2	68 59 40		168 14 30		6			Do.
	2 21 45	40 59 1/2	21 1 1/2	69 0 0		168 7 45		6			Do.
	2 21 45	40 59 1/2	21 1 1/2	69 1 0		167 32 30		6			Do.
	2 27 51	40 17 1/2	21 28	69 2 30		167 59 45		6			Do.
	2 27 51	40 17 1/2	21 28	69 1 25		168 33 0		6			Do.
	2 27 51	40 17 1/2	21 28	69 2 30		167 59 45		6			Do.
	2 32 38	39 42 1/2	21 48 1/2	69 3 25		168 31 45		6			Do.
	2 32 38	39 42 1/2	21 48 1/2	69 4 2[illegible]		168 2 0		6			Do.
	2 32 38	39 42 1/2	21 48 1/2	69 5 0		167 44 30		6			Do.
♄ Oct. 2.	21 13 36	66 50 1/2	44 12 1/2	90 0 40	53 41	155 45 25	44	6	K.	D.	Do.

1779.	Apparent Time.	Altitude of the ☉'s L. L. or ✱.	Moon's Altitude.	Distance of the ☽'s Limb from the ☉'s or ✱.	Latitude of the Ship.	Longitude East of Greenwich.	Therm.	N° of Obs.	Observer.	Sextant used.	Objects.
	H. ′ ″	° ′	° ′	° ′ ″	° ′	° ′ ″	°				
♄ Oct. 2.	21 13 36	66 50¾	44 12¾ U	90 1 30	53 41 N	159 10 45 E	44	6	M.	R. 1	☽ à Sun.
	21 20 57	66 3¾	45 14⅙	89 58 17		159 8 30		6	K.	B.	Do.
	21 20 57	66 3¾	45 14⅙	89 57 22		158 40 45		6	M.	D.	Do.
	21 35 7	64 33½	47 18¾	89 52 5		159 23 30		6	K.	R. 1	Do.
	21 35 7	64 33½	47 18¾	89 51 50		159 16 45		6	M.	R. 1	Do.
	21 42 30	63 56⅔	48 13½	89 48 42		159 14 45		6	K.	R. 3	Do.
	21 42 30	63 56⅔	48 13½	89 48 57		159 22 0		6	M.	R. 2	Do.
♃ —— 15.	3 55 37	14 25⅙	17 8	65 43 27	46 16	155 30 15	41	6	K.	D.	Do.
	3 55 37	14 25⅙	17 8	65 44 3		155 11 0		6	M.	R. 1	Do.
	4 10 9	12 12¾	17 24⅔	65 47 20		155 48 0		6	K.	R. 1	Do.
	4 10 9	12 12¾	17 24⅔	65 47 15		155 50 30		6	M.	D.	Do.
	4 21 27	10 27⅙	17 36	65 48 47		155 33 0		6	K.	R.	Do.
	4 21 27	10 27⅙	17 36	65 50 57		155 33 0		6	M.	R.	Do.
	4 34 54	9 55	17 39⅔	65 50 20		155 14 30		6	K.	R. 1	Do.
	4 34 54	9 55	17 39⅔	65 52 0		155 30 30		6	M.	R. 1	Do.
☉ —— 17.	4 6 59	13 0	13 20	87 50 5	45 29	154 9 0	42	6	K.	D	Do.
	4 6 59	13 0	13 20	87 51 52		155 8 15		6	M.	R. 1	Do.
	4 11 51	12 13½	13 45½	87 52 12		153 41 0		6	K.	R. 1	Do.
	4 11 51	12 13½	13 45½	87 52 15		153 42 15		6	M.	D.	Do.
	4 17 54	11 15	11 15½	87 54 11		153 22 0		6	K.	R. 1	Do.
	4 17 54	11 15	11 15½	87 54 30		153 32 45		6	M.	R. 1	Do.
♀ —— 22.	10 3 14	26 56⅙	42 33¾ L	71 15 10	40 44	147 18 30	40	6	K.	D.	☽ à Aldebaran.
	10 10 14	28 13⅔	42 14⅙	71 11 12		146 29 15		6	K.	D.	Do.
	10 28 38	31 49⅔	42 0	71 6 17		147 11 0		6	K.	R. 1	Do.
	10 37 47	33 37	41 48⅓	71 2 57		147 5 45		6	K.	R. 2	Do.
	11 13 7	12 4	40 58⅓	28 36 42		147 51 15		6	M.	D.	☽ à Fomalhaut.
	11 20 35	11 18⅓	39 32¾	28 38 42		147 59 0		6	M.	R.	Do.
	11 27 2	10 46⅙	39 6	28 40 40		148 9 15		6	M.	R. 2	Do.
♂ —— 26.	14 2 49	46 17	64 2	59 50 57	39 34	142 43 0	39	6	K.	R. 1	☽ à Pollux.
	14 2 49	46 17	64 2	59 51 12		142 49 45		6	M.	D.	Do.
	14 14 56	49 2	62 46⅔	59 46 27		142 41 15		6	K.	D.	Do.
	14 14 56	49 2	62 46⅔	59 47 25		143 6 30		6	M.	R.	Do.
	14 29 28	51 34	62 3⅔	59 41 5	39 39	143 3 30	51½	6	K.	R. 2	Do.
	14 29 28	51 35	62 3⅔	59 41 12		143 2 15		6	M.	R. 3	Do.
	14 39 40	53 55	59 49⅓	59 37 17		142 51 15		6	K.	R. 1	Do.
	14 39 40	53 55	59 49⅓	59 37 12		142 48 45		6	M.	R. 1	Do.
♀ —— 29.	22 4 42	32 34½	16 44½	119 16 25		141 18 0		6	K.	D.	☽ à Sun.
	22 4 42	32 34½	16 44½	119 17 7		141 55 45		6	M.	R. 1	Do.
	22 10 42	15 41	15 41	119 14 10		141 41 15		6	K.	R.	Do.
	22 10 42	15 41	15 41	119 13 35		141 36 0		6	M.	D.	Do.
♄ —— 30.	21 23 29	27 53⅓	35 52¾ U	106 25 27	35 43	141 50 45	54	6	K.	D.	Do.
	21 23 29	27 53⅓	35 52¾	106 26 7		142 9 0		6	M.	R. 1	Do.
	21 23 29	27 53⅓	35 52¾	106 27 45		142 37 45		6	P.	R. 3	Do.
	21 32 32	29 11⅓	33 1⅓	106 21 42		142 1 30		6	K.	R. 1	Do.
	21 32 32	29 11⅓	33 1⅓	106 20 50		141 38 45		6	M.	D.	Do.
	21 32 32	29 11⅓	33 1⅓	106 23 40		142 56 30		6	T.	R. 3	Do.
	21 53 28	31 54⅓	29 59½	106 12 25		142 21 30		6	K.	R. 3	Do.
	21 53 28	31 54⅓	29 59½	106 10 52		141 31 15		6	G.	R. 1	Do.
	22 6 12	33 22½	27 40⅔	106 5 40		142 15 15		6	K.	R 3	Do.
	22 6 12	33 22½	27 40⅔	106 5 2		141 57 0		6	T.	D.	Do.
	22 39 35	36 39⅙	21 10	105 47 43		142 6 45		6	K.	B.	Do.
	22 39 35	36 39⅙	21 10	105 47 17		141 54 45		6	M.	R. 4	Do.

1779.	Apparent Time.	Altitude of the ☉'s L. L. or ✱.	Moon's Altitude.	Distance of the ☽'s Limb from the ☉'s, or ✱.	Latitude of the Ship.	Longitude East of Greenwich.	Therm.	N° of Obs.	Observers.	Sextant used.	Objects.
	H. ′ ″	° ′	° ′	° ′ ″	° ′	° ′ ″	°				
♄ Oct. 30.	22 39 35	36 39½	21 10 U	105 47 22	35 43 N	141 54 30 E	54	6	P.	R. 1	☽ à Sun.
	22 47 44	37 18¼	19 37¾	105 43 35		142 15 15		6	K.	R. 4	Do.
	22 47 44	37 18¼	19 37¾	105 44 3		142 28 0		6	M.	B.	Do.
	22 47 44	37 18¼	19 37¾	205 44 32		142 40 45		6	P.	R. 1	Do.
☉——31.	16 12 43	54 40½	64 4½ L	56 55 35	35 30½	141 14 45	56	6	K.	D.	☽ à Aldebaran.
	16 12 43	54 40½	64 4½	56 55 42		141 11 15		6	M.	R. 1	Do.
	16 19 12	53 32	65 7	56 57 47		141 29 15		6	K.	R. 1	Do.
	16 19 12	53 32	65 7	56 56 55		141 51 0		6	M.	D.	Do.
	16 27 29	51 59½	66 34½	57 1 30		141 10 0		6	K.	R. 2	Do.
	16 27 29	51 59½	66 34½	57 4 48		141 22 15		6	M.	R. 3	Do.
	16 35 43	44 26½	68 9	54 2 25		141 21 15		6	K.	R. 1	☽ à Regulus.
	16 35 43	44 26½	68 9	54 1 27		141 4 45		6	M.	R. 3	Do.
	16 41 35	49 9½	69 8½	57 6 33		141 27 0		4	K.	R. 2	☽ à Aldebaran.
	16 41 35	49 9½	69 8½	57 7 3		141 14 0		4	M.	R. 3	Do.
	16 47 25	47 58½	70 15	57 9 55		140 54 15		3	K.	R. 3	Do.
	16 47 25	47 58½	70 15	57 9 25		141 7 15		3	M.	R. 2	Do.
	17 18 57	52 26¾	74 46½	23 45 52		141 32 30		6	K.	R. 3	☽ à Regulus.
	17 18 57	52 26¾	74 46½	23 45 17		141 17 30		6	M	R. 2	Do.
	17 30 31	54 27½	76 17¾	23 40 47		141 19 30		6	K.	D.	Do.
	17 30 31	54 27½	76 17¾	23 40 47		141 19 30		6	M.	R. 1	Do.
	17 37 25	55 51	77 15½	23 38 25		142 23 0		6	K.	R. 1	Do.
	17 37 25	55 51	77 15½	23 37 30		140 59 30		5	M.	D	Do.
	22 4 15	35 5½	38 40 U	92 49 15	35 21	142 0 45	57	5	K	D.	☽ à Sun.
	22 4 15	35 5½	38 40	92 50 27		142 35 45		6	M.	R. 1	Do.
	22 4 15	35 5½	38 40	92 49 57		142 20 0		6	T.	R. 2	Do.
	22 4 15	35 5½	38 40	92 50 22		142 35 45		6	V.	R. 3	Do.
	22 9 29	33 43½	37 35¾	92 47 7		142 4 30		6	K.	R 1	Do.
	22 9 29	33 43½	37 35¾	92 46 52		141 57 15		6	M.	D.	Do.
	22 9 29	33 43½	37 35¾	92 48 45		142 50 30		6	T.	R. 3	Do.
	22 9 29	33 43½	37 35¾	92 46 55		141 27 0		6	V.	R. 2	Do.
	22 14 32	34 16½	36 35	92 45 7		142 13 45		6	K.	R. 2	Do.
	22 14 32	34 16½	36 35	92 45 52		142 37 0		6	M.	R 3	Do.
	22 14 32	34 16½	36 35	92 44 22		141 56 45		6	T.	D.	Do.
	22 14 32	34 16½	36 35	92 45 5		142 18 30		6	V.	R. 1	Do.
	22 19 6	34 43½	15 41½	92 43 2		142 17 30		6	K.	R. 3	Do.
	22 19 6	34 43½	35 41½	92 43 2		142 17 30		6	M.	R. 2	Do.
	22 19 6	34 43½	35 41½	92 44 2		142 48 45		6	T.	R. 1	Do.
	22 19 6	34 43½	35 41½	92 41 10		141 53 15		6	V.	D.	Do.
	22 30 48	35 51½	33 23½	92 36 40		141 55 0		6	K.	B.	Do.
	22 30 48	35 51½	33 23½	92 38 12		142 37 30		6	P.	R. 1	Do.
	22 30 48	35 51½	33 23½	92 38 5		142 31 45		6	G.	R. 2	Do.
	22 53 36	37 38½	28 55	92 25 48		142 2 45		6	K.	B.	Do.
	22 53 36	37 38½	28 55	92 26 40		142 29 0		6	P.	R. 2	Do.
	22 53 36	37 38½	28 55	92 25 32		141 59 15		6	G.	R. 1	Do.
	23 1 57	38 12½	27 20½	92 22 0		142 20 0		6	K	R. 2	Do.
	23 1 57	38 12½	27 20½	92 22 35		142 37 15		6	P.	B.	Do.
	23 1 57	38 12½	27 20½	92 20 57		142 19 30		6	G.	R. 1	Do.
☿ Nov. 3.	22 29 1	34 17½	54 48½	53 6 45	35 53	146 13 30	68	5	K	D.	Do.
	22 29 1	34 17½	54 48½	53 6 39		146 10 45		5	M.	R. 1	Do.
	22 35 29	34 47½	53 58	53 6 10		146 9 30		6	K.	R. 1	Do.
	22 35 29	34 47½	53 58	53 4 17		146 12 30		6	M	D.	Do.
	22 46 [illegible]	35 0½	53 26	53 0 48		146 31 45		5	K.	R. [illegible]	Do.

1779.	Apparent Time.	Altitude of the ☉'s L. L. or ✱.	Moon's Altitude.	Distance of the ☽'s Limb from the ☉'s, or ✱.	Latitude of the Ship.	Longitude East of Greenwich.	Therm.	No. of Obs.	Observer.	Sextant used.	Objects.
	H. ′ ″	° ′ ″	° ′	° ′ ″	° ′	° ′ ″	°				
♀ Nov. 3.	22 46 6	35 40¼	52 26 U	53 1 5	35 53 N	146 40 0 E	68	5	M.	R. 3	☽ & Sun.
	22 58 0	36 31½	50 33⅕	52 56 22		146 35 15		6	K.	R. 3	Do.
	22 58 0	36 31½	50 33⅕	52 56 7		146 28 15		6	M.	R. 2	Do.
♄ —— 4.	23 6 23	37 28½	50 44¼	39 51 50	35 20	147 5 45	68½	6	K.	D.	Do.
	23 6 23	37 28½	50 44¼	39 52 0		147 10 15		6	M.	R. 1	Do.
	23 12 49	37 43⅓	49 51	39 48 2		146 27 45		6	K.	R. 1	Do.
	23 12 49	37 43⅓	49 51	39 48 25		146 28 0		6	M.	D.	Do.
	23 19 16	38 5	48 54½	39 46 52		146 37 45		6	K.	R. 2	Do.
	23 19 16	38 5	48 54¼	39 46 45		146 34 45		6	M.	R. 3	Do.
☉ —— 14.	1 26 49	41 58¼	19 55⅓	69 9 17	24 36	141 56 0	70	6	K.	R. 1	Do.
	1 32 29	41 19⅓	20 52⅓	67 11 30		141 44 45		6	K.	D.	Do.
	1 40 59	40 21⅓	22 12¾	67 14 10		141 42 45		6	K.	R. 2	Do.
	1 40 59	40 21⅓	22 12¾	67 13 52		141 52 45		6	M.	D.	Do.
	1 48 10	39 29	23 22¾	67 17 5		141 18 45		6	K.	R. 3	Do.
	1 48 10	39 29	23 22¾	67 16 35		141 35 15		6	M.	R. 2	Do.
	3 24 57	24 0⅙	36 2	67 42 30		141 48 45		6	K.	D.	Do.
	3 24 57	24 0⅙	36 2	67 43 27		141 28 15		6	M.	R. 1	Do.
	3 31 36	22 47⅓	36 40⅙	67 44 17		141 44 45		6	K.	R. 1	Do.
	3 31 36	22 47⅓	36 40⅙	67 44 55		141 26 30		6	M.	D.	Do.
	3 31 36	22 47⅓	36 40⅙	67 43 55		141 59 0		6	T.	R. 2	Do.
	3 31 36	22 47⅓	36 40⅙	67 44 5		141 53 0		6	V.	R. 3	Do.
	3 39 20	21 23¾	37 18¾	67 46 15		141 41 45		6	K.	R. 2	Do.
	3 39 20	21 23¾	37 18¾	67 46 27		141 36 15		6	P.	R. 3	Do.
	3 39 20	21 23¾	37 18¾	67 46 37		141 30 15		6	T.	R. 1	Do.
	3 50 33	19 8	38 12	67 49 10		141 30 15		6	K.	R. 3	Do.
	3 50 33	19 8	38 12	67 48 52		141 38 30		6	P.	R. 2	Do.
	3 50 33	19 8	38 12	67 48 57		141 29 0		6	G.	D.	Do.
	3 50 33	19 8	38 12	67 49 40		141 13 45		6	V.	R. 1	Do.
	6 54 10	39 18	33 2⅙ L	94 40 17	24 36	142 2 15	73	6	K.	D.	☽ & α Arietis.
	6 54 10	39 18	33 2⅙	94 41 32		142 46 15		6	M.	R. 1	Do.
	6 54 10	39 18	33 2⅙	94 41 22		142 36 0		6	V.	R. 2	Do.
	7 5 55	41 58⅕	31 42⅓	94 35 5		141 53 45		6	K.	R. 1	Do.
	7 5 55	41 58⅕	31 42⅓	94 36 15		142 4 15		6	M.	D.	Do.
	7 5 55	41 58⅕	31 42⅓	94 37 20		142 43 15		6	T.	R. 2	Do.
	7 19 27	44 59⅓	29 53¼	94 31 35		142 2 0		6	K.	R. 2	Do.
	7 19 27	44 59⅓	29 53¼	94 31 27		141 58 0		6	M.	R. 3	Do.
	7 19 27	44 59⅓	29 53¼	94 32 22		142 27 30		6	G.	D.	Do.
	7 32 34	47 42¼	28 7⅓	94 26 47		142 2 0		6	K.	R. 3	Do.
	7 32 34	47 42¼	28 7⅓	94 27 30		142 24 30		6	M.	R. 1	Do.
	7 32 34	47 42¼	28 7⅓	94 27 25		142 21 45		6	P.	D.	Do.
☽ —— 15.	6 51 1	39 33¾	40 47⅓	83 0 50	24 54	140 50 0	74	6	K.	D.	Do.
	6 51 1	39 33¾	40 47⅓	83 3 22		141 9 0		6	M.	R. 1	Do.
	6 51 1	39 33¾	40 47⅓	83 2 5		14 29 0		6	V.	R. 2	Do.
	7 4 13	42 45⅓	38 56	82 56 30		141 8 15		6	K.	R. 1	Do.
	7 4 13	42 45⅓	38 56	82 57 27		141 38 15		6	M.	D.	Do.
	7 4 13	42 45⅓	38 56	82 58 52		142 20 30		6	T.	R. 2	Do.
	7 18 44	45 55	37 33½	82 52 37		141 2 0		6	K.	R. 3	Do.
	7 18 44	45 55	37 33½	82 53 47		141 39 0		6	M.	R. 2	Do.
	7 18 44	45 55	37 33½	82 55 40		142 36 30		6	G	D.	Do.
	7 32 3	48 56⅓	36 14⅓	82 48 45		141 12 30		6	K.	R. 2	Do.
	7 32 3	48 56⅓	36 14⅓	82 49 0		141 20 15		6	M.	R. 3	Do.
	7 32 3	48 56⅓	36 14⅓	82 48 55		141 17 45		6	P.	D.	Do.

1779.	Apparent Time.	Altitude of the ☉'s L. L. or ✱.	Moon's Altitude.	Distance of the ☽'s Limb from the ☉'s, or ✱.	Latitude of the Ship.	Longitude East of Greenwich.	Therm.	N° of Obs.	Observers.	Sextant used.	Objects.
	H. ′ ″	° ′	° ′	° ′ ″	° ′	° ′ ″	°				
☉ Nov. 15.	8 1 17	55 9½	33 13 L	82 39 30	24 54 N	141 50 30 E	74	5	V.	R. 3	☽ à Antares.
	8 1 17	55 9½	33 13	82 40 3		142 7 15		5	Ta.	D.	Do.
	8 1 17	55 9½	33 13	82 39 31		141 50 30		5	G.	R. 2	Do.
	8 15 55	58 42	30 30½	82 33 45		141 27 45		6	V.	B.	Do.
	8 15 55	58 42	30 30½	82 33 0		141 4 30		6	Ta.	R. 3	Do.
♂ —— 16.	3 47 9	19 9	31 35½	89 43 52	25 0	138 32 15	73½	6	K.	D.	☽ à Sun.
	3 47 9	19 9	31 35½	89 44 5		138 25 0		6	M.	R. 1	Do.
	3 47 9	19 9	31 35½	89 43 47		138 29 30		6	V.	R. 3	Do.
	3 47 9	19 9	31 35½	89 45 2		138 4 45		6	P.	R.	Do.
	3 54 23	17 52½	32 26½	89 45 25		138 12 15		6	K.	R. 1	Do.
	3 54 23	17 52½	32 26½	89 46 10		137 46 30		6	M.	D.	Do.
	3 54 23	17 52½	32 26½	89 46 7		137 43 45		6	V.	R. 2	Do.
	3 54 23	17 52½	32 26½	48 47 2		137 26 45		6	P.	R. 3	Do.
	4 1 15	16 32½	33 31 U	89 48 47		137 54 15		6	K.	R. 3	Do.
	4 1 15	16 32½	33 31	89 48 57		137 48 45		6	M.	R. 2	Do.
	4 1 15	16 32½	33 31	89 46 32		139 8 30		6	V.	D.	Do.
	4 1 15	16 32½	33 31	89 47 55		138 22 45		6	P.	R. 1	Do.
	4 10 11	14 47½	34 50½	89 50 30		137 59 45		6	K.	R. 2	Do.
	4 10 11	14 47½	34 50½	89 51 45		137 29 30		3	M.	R. 3	Do.
	4 10 11	14 47½	34 50½	89 50 20		138 24 30		3	V.	R. 1	Do.
	4 10 11	14 47½	34 50½	89 49 15		138 49 30		3	P.	D.	Do.
	6 49 5	40 25	46 43½ L	71 17 20	24 52	138 27 0	73	6	K.	D.	☽ à α Arietis.
	6 49 5	40 25	46 43½	71 18 10		138 53 0		6	M.	R. 1	Do.
	6 49 5	40 25	46 43½	71 20 35		139 36 45		6	G.	R. 2	Do.
	6 49 5	40 25	46 43½	71 16 25		138 29 30		6	V.	R. 3	Do.
	6 58 50	42 34½	46 23½	71 15 5		138 53 45		6	K	R. 1	Do.
	6 58 50	42 34½	46 23½	71 14 50		138 44 30		6	M.	D.	Do.
	6 58 50	42 34½	46 23½	71 16 7		139 25 45		6	G.	R. 3	Do.
	6 58 50	42 34½	46 23½	71 16 27		139 36 0		6	V.	R. 2	Do.
	7 16 38	46 12	44 41½	71 9 7		138 42 0		6	K.	R. 3	Do.
	7 16 38	46 12	44 41½	71 9 7		138 42 0		6	M.	R. 2	Do.
	7 16 38	46 12	44 41½	71 11 17		139 2 45		6	G.	R. 1	Do.
	7 16 38	46 12	44 41½	71 9 50		139 4 15		6	P.	D.	Do.
	7 28 46	48 40	43 59½	71 5 40		138 58 15		6	K.	R. 2	Do.
	7 28 46	48 40	43 59½	71 5 50		139 3 30		6	M.	R. 3	Do.
	7 28 46	48 40	43 59½	71 6 25		139 21 30		6	G.	D.	Do.
	7 28 46	48 40	43 59½	71 6 5		139 12 15		6	P.	R. 1	Do.
	7 40 52	51 41½	43 4½	71 2 30		138 46 15		6	V.	D.	Do.
	7 40 52	51 41½	43 4½	71 2 25		138 43 45		6	M.	R. 3	Do.
	7 40 52	51 41½	43 4½	71 2 20		138 41 15		6	P.	R. 2	Do.
	7 51 11	53 59½	42 7½	70 58 54		138 39 45		6	V.	R. 1	Do.
	7 51 11	53 59½	42 7½	70 58 57		138 31 0		6	M.	R. 2	Do.
	7 51 11	53 59½	42 7½	70 59 7		138 46 30		6	P.	R. 3	Do.
☉ —— 21.	6 19 33	37 32½	35 26 U	58 37 33	21 17	126 55 45	74	6	K.	D.	☽ à Fomalhaut.
	6 19 33	37 32½	35 26	58 37 50		126 45 0		6	M.	R. 1	Do.
	6 19 33	37 32½	35 26	58 39 36		125 58 0		6	Ta.	R. 3	Do.
	6 19 33	37 32½	35 26	58 37 12		127 12 45		6	V.	R. 2	Do.
	6 30 46	37 53½	37 54½	58 42 35		126 56 0		6	K.	R. 1	Do.
	6 30 46	37 53½	37 54½	58 42 20		127 3 0		6	M.	D.	Do.
	6 30 46	37 53½	37 54½	58 44 37		125 58 30		6	T.	R. 2	Do.
	6 30 46	37 53½	37 54½	58 43 32		126 28 15		6	V.	R. 3	Do.
	6 40 50	38 3½	40 13½	58 48 12		126 27 45		6	K.	R. 2	Do.

1779.	Apparent Time.	Altitude of the ☉'s L. L. or ✱.	Moon's Altitude.	Distance of the ☽'s Limb from the ☉'s, or ✱.	Latitude of the Ship.	Longitude East of Greenwich.	Therm.	N° of Obs.	Observer.	Sextant used.	Objects.
	H. ′ ″	° ′	° ′	° ′ ″	° ′	° ′ ″	°				
☉ Nov. 21.	6 40 50	38 3¾	40 13⅓ U	58 48 5	21 19 N	126 25 15 E	74	6	M.	R. 3	☽ à Fomalhaut.
	6 40 50	38 3¾	40 13⅓	58 47 12		126 55 15		6	T.	R. 1	Do.
	6 40 50	38 3¾	40 13⅓	58 46 22		127 19 15		6	V.	D.	Do.
	6 49 42	38 9⅓	42 19	58 52 2		126 27 45		6	K.	R. 3	Do.
	6 49 42	38 9⅓	42 19	58 51 55		126 30 0		6	M.	R. 2	Do.
	6 49 42	38 9⅓	42 19	58 53 5		126 40 15		6	T.	D.	Do.
	6 49 42	38 9⅓	42 19	58 51 2		126 55 45		6	V.	R. 1	Do.
	7 7 2	37 55⅓	46 14¾	58 58 22		126 52 0		6	R.	D.	Do.
	7 7 2	37 55⅓	46 14¾	58 58 15		126 55 45		6	M.	R. 2	Do.
	7 7 2	37 55⅓	46 14¾	58 57 52		127 6 15		6	G.	R. 1	Do.
	7 19 7	37 36¾	48 52	59 4 5		126 38 15		6	P.	R. 1	Do.
	7 19 7	37 36¾	48 52	59 2 35		127 10 30		6	M.	R. 3	Do.
	7 19 7	37 36¾	48 52	59 3 52		126 44 15		6	G.	D.	Do.
	7 32 12	37 16⅓	51 49¾	59 10 21		126 15 15		6	P.	R. 3	Do.
	7 32 12	37 16⅓	51 49¾	59 9 5		126 51 0		6	M.	R. 1	Do.
	7 32 12	37 16⅓	51 49¾	59 10 39		126 6 45		6	G.	R. 2	Do.
	7 44 0	36 46¼	54 31¾	59 14 45	21 12	126 30 30	74½	4	P.	R. 2	Do.
	7 44 0	36 46¼	54 31¾	59 12 48		127 25 0		4	M.	D.	Do.
	8 37 24	34 32⅙	65 45	37 18 50		127 28 45		6	K.	D.	☽ à Aldebaran.
	8 37 24	34 32⅙	65 45	37 19 5		127 31 0		6	M.	R. 1	Do.
	8 37 24	34 32⅙	65 45	37 18 35		127 17 30		6	T.	R. 3	Do.
	8 37 24	34 32⅙	65 45	37 18 47		127 23 15		6	V.	R. 2	Do.
	8 59 18	39 34¾	70 33¾	37 11 5		127 14 30		6	M.	R. 1	Do.
	8 59 18	39 34¾	70 33¾	37 12 12		127 45 30		6	M.	D.	Do.
	8 59 18	39 34¾	70 33¾	37 11 35		127 28 0		6	T.	R. 2	Do.
	8 59 18	39 34¾	70 33¾	37 10 32		127 1 45		6	V.	R. 3	Do.
	9 7 23	41 17¼	71 43⅓	37 7 40		127 2 15		6	K.	R. 2	Do.
	9 7 23	41 17¼	71 43⅓	37 8 25		127 20 30		6	M.	R. 3	Do.
	9 7 23	41 17¼	71 43⅓	37 9 15		127 43 0		6	T.	D.	Do.
	9 7 23	41 17¼	71 43⅓	37 8 50		127 31 45		6	V.	R. 1	Do.
	9 14 44	43 1½	73 3⅓	37 5 37		127 15 0		6	K.	R. 3	Do.
	9 14 44	43 1½	73 3⅓	37 5 37		127 15 0		6	M.	R. 2	Do.
	9 14 44	43 1½	73 3⅓	37 5 20		127 7 0		6	T.	R. 1	Do.
1780.	9 14 44	43 1½	73 3⅓	37 6 20		127 28 0		6	V.	D.	Do.
♃ Jan. 13.	6 59 12	60 2½	55 1⅙	60 26 40	22 5	114 14 15	69	6	K.	D.	☽ à Sun.
	6 39 12	60 2½	55 1⅙	60 27 15		114 31 15		6	M.	R. 1	Do.
	6 46 29	61 35⅙	53 41⅔	60 24 5		114 6 15		6	K.	R. 1	Do.
	6 46 29	61 35⅙	53 41⅔	60 24 45		114 26 0		6	M.	D.	Do.
♀ —— 14.	4 17 27	14 20	66 15	83 35 1	20 20	113 6 45	68	6	K.	R. 1	Do.
	4 17 27	14 20	66 15	83 35 26		112 53 30		6	M.	D.	Do.
	4 45 30	8 44⅓	70 53⅔	83 41 12		112 50 30		6	K.	D.	Do.
	4 45 30	8 44⅓	70 53⅔	83 41 12		112 49 30		6	M.	R. 1	Do.
	6 33 2	59 29	67 59⅙	48 6 40		114 50 45		6	K.	D.	Do.
	6 33 2	59 29	67 59⅙	48 6 12		114 37 15		6	M.	R. 1	Do.
	6 44 12	62 7⅙	66 9⅙	48 2 10		114 22 45		6	K.	R. 1	Do.
	6 44 12	62 7⅙	66 9⅙	48 2 10		114 32 30		6	M.	D.	Do.
♄ —— 15.	4 20 0	14 47⅓	61 42⅔	95 20 53	18 38	113 24 30	70	6	K.	D.	Do.
	4 20 0	14 47⅓	61 42⅔	95 20 37		113 33 45		6	M.	R. 1	Do.
	4 30 9	12 43⅔	63 57½	95 22 37		113 44 30		6	K.	R. 1	Do.
	4 30 9	12 43⅔	63 57½	95 23 10		113 27 45		6	M.	D.	Do.
	6 37 26	62 1	79 16⅓	35 24 45		114 13 0		6	K.	D.	Do.
	6 37 26	62 1	79 16⅓	35 23 50		113 47 15		6	M.	R. 1	Do.

1780.	Apparent Time.	Altitude of the ☉'s L. L. or ✱.	M. on's Altitude.	Distance of the ☽'s Limb from the ☉ or ✱.	Latitude of the Ship.	Longitude East of Greenwich.	Therm.	No of Obs.	Observers.	Sextant used.	Objects.
	H. ′ ″	° ′	° ′	° ′ ″	° ′	° ′ ″	°				
♄ Jan. 15.	6 52 47	65 34 1/1	77 14 3/4 U	35 18 17	18 38 N	113 50 15 E	70	6	K.	R.	☽ à Sun.
	6 52 47	65 34 1/1	77 14 3/4	35 19 50		114 34 45		6	M.	D.	Do.
☽ —— 31.	17 3 37	73 23 1/2	32 47 1/2 L	61 55 0	8 38 1/4	104 5 45		6	K.	D.	☽ à Spica Virg.
	17 3 37	73 23 1/2	32 47 1/2	61 55 10		104 13 30	78	6	M.	R.	Do.
	17 13 39	71 34 1/6	34 57	61 57 57		104 41 0		6	K.	R.	Do.
	17 13 39	71 34 1/6	34 57	61 58 14		104 29 15		6	M.	D.	Do.
	17 25 6	69 27 1/2	38 16 1/2	62 1 22		104 51 15		6	K.	R 2	Do.
	17 25 6	69 27 1/2	38 16 1/2	62 2 22		104 31 15		6	M.	R. 3	Do.
	17 31 2	68 5	39 36 1/1	62 4 25		104 17 45		6	K.	R. 3	Do.
	17 31 2	68 5	39 36 1/1	62 4 15		104 23 0		6	M.	R. 2	Do.
	20 23 54	35 23 1/6	62 14 1/1	47 53 5		105 28 30		6	K.	D.	☽ à Sun.
	20 23 54	35 23 1/6	62 14 1/1	47 53 20		105 36 30		6	M.	R. 1	Do.
	20 32 15	38 26 1/2	61 27 1/1	47 49 12		104 39 15		6	K.	R. 2	Do.
	20 32 15	38 26 1/2	61 27 1/1	47 50 22		105 17 15		6	M.	R. 3	Do.
	20 45 14	40 1	61 19 1/6	47 48 20		104 58 45		6	K.	R. 3	Do.
	20 45 14	40 1	61 19 1/6	47 48 2		104 47 45		6	M.	R. 2	Do.
♀ Feb. 18.	8 51 54	44 56 1/6	50 47 1/1 U	60 34 37	7 0 S	104 56 0	80	6	K.	D.	☽ à Aldebar.
	8 51 54	44 56 1/6	50 47 1/1	60 34 17		105 4 15		6	M.	R. 1	Do.
	9 0 41	43 3 1/1	52 9	60 37 57		104 57 30		6	K.	R. 1	Do.
	9 0 41	43 3 1/1	52 9	60 37 27		105 9 0		6	M.	D.	Do.
	9 13 59	40 10	54 13	60 42 17		105 13 0		6	K.	R. 1	Do.
	9 13 59	40 10	54 13	60 42 40		105 3 30		6	M.	R. 1	Do.
	9 24 36	37 39 1/2	55 10	60 46 52		104 57 45		6	K.	R. 1	Do.
	9 24 36	37 39 1/2	55 10	60 46 47		104 56 0		6	M.	R. 2	Do.
	14 10 36	75 57	30 48 L	72 22 57	7 3	105 31 45	79	6	M.	D.	☽ à Spica Virg.
	14 10 36	75 57	30 48	72 23 57		105 53 0		6	M.	R. 1	Do.
	14 21 30	78 37	28 41 1/1	72 18 20		105 29 45		6	K.	R. 1	Do.
	14 21 30	78 37	28 41 1/1	72 16 17		105 30 45		6	M.	D.	Do.
	14 32 11	81 12	26 31 1/4	72 8 57		105 13 15		6	K.	R. 3	Do.
	14 32 11	81 12	26 31 1/4	72 13 27		105 29 15		6	M.	R. 3	Do
	14 41 12	83 14	24 39 1/2	72 8 27		105 6 15		6	K.	R. 3	Do.
	14 41 12	83 14	24 39 1/2	72 3 0		105 12 45		6	M.	R. 2	Do.
	14 51 9	85 12	22 34 1/1	72 0 42		105 21 30		6	K.	D.	Do.
	14 51 9	85 12	22 34 1/1	72 1 12		105 33 15		6	M.	R. 1	Do.
♄ —— 26.	20 31 21	38 27 3/4	49 29 U	90 4 52	13 48	99 33 30	80	6	K.	D.	☽ à Sun.
	20 31 21	38 27 3/4	49 29	90 6 12		100 15 0		6	M.	R. 1	Do.
	20 37 51	40 3	48 3 1/1	90 3 42		99 44 0		6	K.	R. 1	Do.
	20 37 51	40 3	48 3 1/1	90 3 40		99 57 45		6	M.	D.	Do.
	0 53 44	74 15 1/1	15 22 1/6	65 37 30		93 53 30		6	K.	D.	Do.
	0 53 44	74 15 1/1	15 22 1/6	65 37 27		93 52 0		6	M.	R.	Do.
	0 57 53	73 13 1/1	14 31	65 35 0		93 39 15		6	K	R. 1	Do.
	0 57 53	73 13 1/1	14 31	65 35 55		94 9 15		6	M.	D.	Do.
♄ Mar. 11.	0 57 54	67 21 1/2	35 4 3/4	57 44 40	20 49	71 14 0	79	6	K.	D.	Do.
	0 57 54	67 21 1/2	35 4 3/4	57 45 45		70 41 45		6	M.	R. 1	Do.
		62 21 1/2	35 4 3/4	57 44 55		71 7 30		6	V.	R. 2	Do.
	1 2 23	66 41 1/6	35 56 1/2	57 47 0	20 45	70 49 0	79	6	K.	R. 1	Do.
	1 2 23	66 41 1/6	35 56 1/2	57 46 47		70 42 30		6	M.	D.	Do.
	1 2 23	66 41 1/6	35 56 1/2	57 46 17		71 11 15		6	T.	R. 2	Do.
	1 12 7	65 0 1/4	37 29 1/2	57 49 27		71 15 15		6	R.	R. 2	Do.
	1 12 7	65 0 1/4	37 29 1/2	57 49 20		71 19 0		6	M.	R. 3	Do.
	1 12 7	65 0 1/4	37 29 1/2	57 49 47		71 5 15		6	G	D.	Do.
	1 17 1	64 12 3/4	38 31 1/1	57 50 57		71 17 45		6	K.	R. 3	Do.

1780.	Apparent Time.	Altitude of the ☉'s L. L. or ✱.	Moon's Altitude.	Distance of ☽'s Limb from the ☉'s, or a ✱.	Latitude of the Ship.	Longitude East of Greenwich.	Therm.	Nº of Obs.	Observers.	Sextant used.	Objects.
	H. ′ ″	° ′	° ′	° ′ ″	°	° ′ ″	°				
♄ Mar. 11.	1 17 1	64 12¾	38 31¼ U	57 51 35	20 45 S	70 59 0 E	79	6	M.	R. 2	☽ à Sun.
	1 17 1	64 12¾	38 31¼	57 52 40		70 25 45		6	P.	D.	Do.
☉——12.	1 3 49	65 57½	24 18	65 53 32	21 10	68 59 30	80	6	K.	D.	Do.
	1 3 49	65 57½	24 18	69 54 22		68 35 0		6	M.	R. 1	Do.
	1 3 49	65 57½	24 18	69 54 2		68 44 45		6	V	R. 2	Do.
	1 12 0	64 36½	25 50¾	69 56 35		69 5 30		6	K.	R. 1	Do.
	1 12 0	64 36½	25 50¾	69 56 45		68 58 0		6	M.	D.	Do
	1 12 0	64 36½	25 50¾	69 57 20		68 41 0		6	T.	R. 2	Do.
	1 28 34	61 40¼	38 39	70 2 0		69 22 45		6	K.	R. 2	Do.
	1 28 34	61 40¼	38 39	70 3 7		68 54 45		6	M	R. 3	Do.
	1 28 34	61 40¼	38 39	70 2 50		69 3 0		6	M.	D.	Do.
	1 31 41	61 0¼	29 10	70 4 5		68 59 15		3	K.	R. 3	Do.
	1 31 41	61 0¼	29 10	70 4 45		68 37 45		3	M.	R. 2	Do.
	1 31 41	61 0¼	29 10	70 5 15		68 20 0		3	P.	D.	Do.
☽——13.	3 41 4	32 54½	36 51½ L	83 15 52	21 28	66 28 0	79½	6	K.	D.	Do.
	3 41 4	32 54½	36 51½	83 16 50		65 59 45		6	M.	R. 1	Do.
	3 46 21	31 30¾	37 22	83 17 52		66 18 15		6	K.	R. 1	Do.
	3 46 21	31 30¾	37 22	83 17 42		66 32 30		6	M.	D.	Do.
	3 54 17	29 45	38 13	83 20 20		66 10 0		6	K.	R. 2	Do.
	3 54 17	29 45	38 13	83 20 50		65 55 30		6	M.	R. 3	Do.
	3 59 26	28 35¼	38 42¾	83 21 42		66 19 30		6	R.	R. 3	Do.
	3 59 26	28 35¼	38 42¾	83 22 25		65 59 0		6	M.	R. 2	Do.
	4 16 11	24 45¾	40 17¾	83 28 30		65 12 30		6	T.	D. 1	Do.
	4 16 11	24 45¾	40 17¾	83 28 17		65 19 15		6	G.	R.	Do.
	4 16 11	24 45¾	40 17¾	83 29 0		64 58 45		6	M.	D. 2	Do.
♃——15.	9 20 51	52 38½	17 23	67 38 36	21 38	66 20 15	78	5	K.	R.	☽ à Regulus.
	9 20 51	52 38½	17 23	67 39 29		66 43 30		5	M.	R. 1	Do.
	9 34 55	53 35¾	14 57¼	67 33 5		66 46 30		6	K.	R. 1	Do.
	9 34 55	53 35¾	14 57¼	67 32 45		66 37 45		6	M.	D.	Do.
	9 48 35	54 25	12 24½	67 26 20		66 42 30		6	K.	R. 2	Do.
	9 48 35	54 25	12 24½	67 26 17		66 41 30		6	M.	R. 3	Do.
	9 57 9	54 50¾	10 49	67 20 7		65 54 0		6	K.	R. 3	Do.
	9 57 9	54 50¾	10 49	67 22 2		66 44 41		6	M.	R. 2	Do.
	4 16 2	24 33½	22 25¼ U	109 23 45	21 38	62 30 0	80	6	K.	D.	☽ à Sun.
	4 16 2	24 33½	22 25¼	109 24 35		62 6 0		6	M.	R. 1	Do.
	4 22 52	22 57	23 25½	109 27 20		62 2 0		6	K.	R. 1	Do.
	4 22 52	22 57	23 25½	109 27 0		42 11 15		6	M.	D.	Do.
	4 29 35	21 31¾	24 27¾	109 31 30		61 18 30		6	M.	D.	Do.
	4 29 35	21 31¾	24 27¾	109 29 25		62 15 30		6	G.	D.	Do.
	4 33 45	20 31	25 4¾	109 31 0		62 12 0		6	T.	D.	Do.
	4 33 45	20 31	25 4¾	109 32 50		61 21 45		6	G.	R. 1	Do.
	4 37 56	19 34¼	25 47¾	109 33 32		61 48 0		6	T.	R. 1	Do.
	4 37 56	19 34¼	25 47¾	109 32 27		62 13 15		6	M.	D.	Do.
	7 18 42	34 57¾	39 43¾	40 59 50	22 47	62 33 15	79	6	K.	D.	☽ à Regulus.
	7 18 42	34 57¾	39 43¾	41 0 10		62 24 45		6	M.	R. 1	Do.
	7 26 28	33 35¾	39 47¾	41 2 0		62 45 45		6	K.	R. 1	Do.
	7 26 28	33 35¾	39 47¾	41 2 5		62 43 45		6	M.	D.	Do.
	7 37 13	37 53¾	39 48¾	40 20 27		62 14 45		6	K.	D.	Do.
	7 37 13	37 53¾	39 48¾	40 21 17		62 36 0		6	M.	R. 1	Do.
	7 45 7	39 18¼	39 44¼	40 18 25		62 32 45		6	K.	R. 1	Do.
	7 45 7	39 18¼	39 44¼	40 17 45		62 15 30		6	M.	D.	Do.
	7 57 0	41 23	39 28¼	40 14 40		62 54 33		6	T.	D.	Do.

1780.	Apparent Time.	Altitude of the ☉'s L. L. or ✱.	Moon's Altitude.	Distance of ☽'s Limb from the ☉'s or a ✱.	Latitude of the Ship.	Longitude East of Greenwich.	Therm.	N° of Obs.	Observer.	Sextant used.	Objects.
	H. ′ ″	° ′	° ′	° ′ ″	° ′	° ′ ″	°				
♅ Mar. 15.	7 57 0	41 23½	39 28½ U	40 12 37	22 47 S	62 46 48 E	79	6	G.	R. 1	☽ à Regulus.
	8 5 24	42 39½	39 12½	40 11 50		62 52 30		6	T.	R. 1	Do.
	8 5 24	42 39½	39 12½	40 12 17		63 5 0		6	G.	D.	Do.
	9 59 25	50 18½	44 53 L	36 29 5	26 54	53 4 5	76	6	K.	D.	Do.
	9 59 25	50 18½	44 53	36 27 5		53 32 30		6	M.	R. 2	Do.
	10 8 32	50 7½	46 32	36 31 17		53 18 0		6	K.	R. 2	Do.
	10 8 32	50 7½	46 32	36 31 44		53 14 45		6	M.	D.	Do.
	10 23 17	49 39½	49 14¼	37 11 45		52 43 30		6	K.	D.	Do.
	10 23 17	49 39½	49 14¼	37 12 52		52 16 45		6	M.	R. 2	Do.
☽ —— 20.	10 33 52	48 52½	51 8½	37 15 57	26 54	52 47 15	51	6	K.	R. 2	Do.
	10 33 52	48 52½	51 8½	37 10 35		52 32 0		6	M.	D.	Do.
♄ —— 25.	22 11 16	47 55½	19 50½ U	107 8 55	30 24	38 47 0	50	6	K.	D.	☽ à Sun.
	22 21 45	50 12½	17 45½	107 3 17		38 8 30		6	K.	R. 1	Do.
	22 21 45	50 12½	17 45½	107 3 55		38 27 45		6	M.	D.	Do.
	20 32 24	29 57	51 35½	96 11 42	31 10	37 40 0	58	6	K.	D.	Do.
☉ —— 26.	20 32 24	29 57	51 35½	96 12 18		37 59 0		6	M.	R. 1	Do.
	20 39 49	31 23½	50 3½	96 9 7		37 33 45		6	K.	R. 1	Do.
	20 39 49	31 23½	50 3½	96 9 36		37 45 45		6	M	D.	Do.
	21 23 30	38 43½	62 8¾	73 25 0	31 15	34 39 40		6	K.	D.	Do.
♂ —— 28.	21 23 30	38 43½	62 8¾	73 25 12		34 48 10		6	M.	R. 1	Do.
	21 29 26	39 42½	60 56½	73 23 15		34 42 0		6	K.	R. 1	Do.
	21 29 26	39 42½	60 56½	73 22 50		34 28 15		6	M.	D.	Do.
	21 39 52	58 43½	58 43½	73 19 45		34 29 15		6	K.	R. 2	Do.
	21 39 52	58 43½	58 43½	73 19 50		34 32 0		6	M.	R. 3	Do.
	21 45 31	42 24½	57 31½	73 19 2		35 0 30		6	K.	R. 3	Do.
	21 45 31	42 24½	57 31½	73 18 17		34 35 45		6	M.	R. 2	Do.
	21 44 28	41 5½	73 4¾ I	40 15 50	32 8	31 0 15	75	6	K.	D.	Do.
♀ —— 31.	21 44 28	41 5½	73 4¾	40 16 7		31 9 45		6	M.	R. 1	Do.
	21 49 47	41 53½	72 52½	40 13 30		30 24 45		6	K.	R. 1	Do.
	21 49 47	41 53½	72 52½	40 13 40		30 35 5		6	M.	D.	Do.
	22 3 26	43 55½	71 55¼	40 8 40		28 12 45		6	K.	R. 2	Do.
	22 3 26	43 55½	71 55¼	40 9 32		28 41 30		6	M.	R. 3	Do.
	22 9 53	44 47¼	71 22½	40 8 20		29 36 45		6	K.	R. 3	Do.
	22 9 53	44 47¼	71 22½	40 7 2		28 51 15		6	M.	R. 2	Do.
	3 52 31	20 30¾	29 44¾ U	54 55 5	35 7	19 50 15	67	6	K.	R. 2	Do.
☉ April 9.	3 52 31	20 30¾	29 44¾	54 51 45		19 39 45		6	M.	R. 1	Do.
	3 58 40	19 20½	29 39½	54 52 30		20 7 30		6	K.	R. 1	Do.
	3 58 40	19 20½	29 39½	54 52 47		19 51 0		6	M.	D.	Do.
	4 29 33	13 35½	28 46¾	55 2 47		19 45 45		6	K.	R. 2	Do.
	4 29 33	13 35½	28 46¾	55 2 32		19 24 0		6	M.	R. 3	Do.
	4 34 24	12 40½	28 31¾	55 5 0		19 22 0		6	K.	R. 3	Do.
	4 34 24	12 40½	28 31¾	55 4 2		19 46 15		6	M.	R. 2	Do.
♃ May 11.	3 31 23	17 25	21 28½	90 11 22	34 8	17 22 30	64½	6	K.	D.	Do.
	3 31 23	17 25	21 28½	90 11 37		17 15 30		6	M.	R. 1	Do.
	3 36 28	16 35½	22 11	90 14 10		17 3 0		6	K.	R 1	Do.
	3 36 28	16 35½	22 11	90 13 22		17 27 45		6	M.	D.	Do.
	6 25 32	36 7½	36 11½ L	58 13 25	34 18	18 22 45	50	6	K.	D.	Do.
	6 25 32	36 7½	36 11½	58 14 30		18 27 15		6	M.	R. 1	Do.
	6 33 5	37 40½	36 16¾	58 9 17		17 54 45		6	K.	R. 1	Do.
	6 33 5	37 40½	36 16¾	58 11 7		18 41 30		6	M.	D.	Do.
♃ —— 18.	14 7 53	22 16	64 48	45 20 30	26 30	1 45 30 W		6	K.	D.	☽ à Antares.
	14 17 58	20 2	64 0	45 22 0		2 11 45		6	M.	R. 1	Do.

1780.	Apparent Time.	Altitude of the ☉'s L. L. or ✱.	Moon's Altitude.	Distance of the ☽'s Limb from the ☉'s or ✱.	Latitude of the Ship.	Longitude East of Greenwich.	Therm.	No. of Obs.	Observer.	Sextant used.	Objects.
	H. ′ ″	° ′	° ′	° ′ ″	° ′	° ′ ″	°				
♃ May 18.	14 30 5	31 32	62 24 L	84 56 40	26 30 S	3 12 45 W	60	6	M.	R. 1	☽ à Fomalhaut.
	14 39 38	33 31	60 17	84 53 12		2 48 30		6	M.	D.	Do.
☉——21.	14 25 22	31 37	78 50	47 7 40	22 47	2 25 40	70	6	M.	D.	Do.
	14 32 14	32 59	80 17	47 4 45		2 57 45		6	M.	R. 1	Do.
	14 40 10	57 30	81 35	38 39 12		4 11 15		6	M.	R. 1	☽ à Antares.
	14 49 27	55 0	83 20	38 42 25		4 31 45		6	M.	D.	Do.
♅——24.	16 16 34	32 6	70 45⅔	75 52 27	18 37	9 36 0	74	6	M.	D.	☽ à α Pegasi.
	16 23 31	30 34	72 16⅔	75 53 30		9 4 45		6	M.	R. 1	Do.
	20 28 36	24 47¾	50 47⅓ U	100 6 12	18 28	8 24 45	73	6	K.	D.	☽ à Sun.
	20 28 36	24 47¾	50 47⅓	100 6 57		8 1 0		6	M.	R. 1	Do.
	20 35 44	26 7⅓	49 10⅓	100 3 35		8 37 15		3	K.	R. 1	Do.
	20 35 44	26 7⅓	49 10⅓	100 4 10		8 18 0		3	M.	D.	Do.
♄——27.	15 5 57	66 23	22 1	66 47 47	15 15	14 24 30	72	6	M.	D.	Do.
	20 44 31	29 32⅔	71 7¾	66 36 35		12 24 45		6	K.	D.	Do.
	20 44 31	29 32⅔	71 7¾	66 36 50		12 22 0		6	M.	R. 1	Do.
	20 49 27	30 28⅓	70 6⅓	66 34 50		12 41 30		6	K.	R. 1	Do.
	20 49 27	30 28⅓	70 6⅓	66 35 12		12 29 30		6	M.	D.	Do.
♂ June 6.	3 32 24	29 46	57 52⅓ L	48 47 33	7 40	21 35 15	80	6	K.	R. 1	Do.
	3 32 24	29 46	57 52⅓	48 47 39		21 37 45		6	M.	D.	Do.
	3 45 29	27 1⅙	57 45½	48 51 42		21 37 45		6	K.	D.	Do.
	3 45 29	27 1⅙	57 45½	48 52 17		21 55 30		6	M.	R. 1	Do.
♃—— 8.	3 28 13	32 8⅓	55 14¾	76 1 32	4 37	24 25 0	79½	6	K.	D.	Do.
	3 28 13	32 8⅓	55 14¾	76 2 12		24 43 0		6	M.	R. 1	Do.
	3 33 49	30 56⅓	51 28	76 3 37		24 31 30		6	K.	D.	Do.
	3 33 49	30 56⅓	51 28	76 3 30		24 26 30		6	M.	R.	Do.
	9 27 12	68 19½	28 52	44 18 0	4 9	24 12 15	77	6	K.	D.	☽ à Spica Virg.
	9 27 12	68 19½	28 52	44 18 15		24 4 30		6	M.	R. 1	Do.
	9 36 47	66 1¼	26 37⅓	44 13 5		24 34 15		6	K.	R. 1	Do.
	9 36 47	66 1¼	26 37⅓	44 14 5		24 8 30		6	M.	D.	Do.
♄——10.	3 50 14	28 47⅓	42 0¾ U	102 53 35	1 28	26 7 45	80	6	K.	D.	☽ à Sun.
	3 50 14	28 47⅓	42 0¾	102 54 32		26 34 15		6	M.	R. 1	Do.
	3 53 59	27 57	42 55¼	102 55 25		26 24 0		6	K.	R. 1	Do.
	3 53 59	27 57	42 55¼	102 55 37		26 29 15		6	M.	D.	Do.
	6 49 13	25 33⅙	85 19¾	62 32 45	1 17	25 56 15	78	6	K.	D.	☽ à Antares.
	6 49 13	25 33⅙	85 19¾	62 33 2		25 49 30		6	M.	R. 1	Do.
	6 56 44	27 17¾	86 13¾	62 29 25		26 15 45		6	K.	R. 1	Do.
	6 56 44	27 17¾	86 13¾	62 30 22		25 51 45		6	M.	D.	Do.
♃——22.	20 28 11	37 33⅙	34 35	107 28 40	9 35 N	28 58 30	81	6	K.	D.	☽ à Sun.
	20 28 11	37 33⅙	34 35	107 29 30		28 30 15		6	M.	R. 1	Do.
	20 34 44	39 3⅓	33 6¾	107 26 50		28 45 0		6	K.	R. 1	Do.
	20 34 44	39 3⅓	33 6¾	107 26 45		28 42 20		6	M.	D.	Do.
☉——25.	20 24 0	37 49¾	67 53¾	73 50 5	12 42	30 57 0	80½	6	K.	D.	Do.
	20 24 0	37 49¾	67 53¾	73 50 32		30 41 30		6	M.	R. 1	Do.
	20 28 6	38 49⅓	66 55⅓	73 48 42		31 11 30		6	K.	R. 1	Do.
	20 28 6	38 49⅓	66 55⅓	73 49 7		31 11 30		6	M.	D.	Do.
☽——26.	16 17 10	44 45	40 53⅙ L	94 24 15	13 28	32 44 0	77½	6	M	D.	☽ à α Aquilæ.
	16 24 42	42 55	42 55¼	94 26 0		32 30 30		6	M.	R.	Do.
	20 23 26	37 55⅓	79 30¼	62 4 52	13 50	31 55 15	79½	6	K.	D.	☽ à Sun.
	20 23 26	37 55⅓	79 30¾	62 5 7		31 48 0		6	M.	R. 1	Do.
	20 29 13	39 16½	78 12⅓	62 2 42		32 13 30		6	K.	R. 1	Do.
	20 29 13	39 16½	78 12⅓	62 3 7		31 58 15		6	M	D.	Do.
♀ July 7.	7 50 40	33 0	42 23¼	64 54 55	28 19	40 33 45	74	6	K.	D.	☽ à Antares.

1780.	Apparent Time.	Altitude of the ☉'s L. L. or ✱.	Moon's Altitude.	Distance of the ☽'s Limb from the ☉'s, or ✱.	Latitude of the Ship.	Longitude West of Greenwich.	Therm.	N° of Obs.	Observers.	Sextant used.	Objects.
	H. ′ ″	° ′	° ′	° ′ ″	° ′	° ′ ″	°				
♀ July 7.	7 50 40	33 0½	42 23¾ L	64 54 30	28 19 N	40 44 15 W	74	6	M.	R. 1	☽ à Antares.
	7 58 24	33 38½	40 30¼	64 50 5		41 12 15		6	K.	R. 1	Do.
	7 58 24	33 38½	40 30¾	64 51 55		40 32 15		6	M.	D.	Do.
☉ —— 9.	4 57 5	23 24	44 49½ U	100 52 2	29 36	42 6 45	79	6	K.	D.	☽ à Sun.
	4 57 5	23 24	44 49½	100 52 32		42 27 41		6	M.	R. 1	Do.
	5 1 54	22 34	45 25¾	100 53 30		42 16 30		6	K.	R. 1	Do.
	5 1 54	22 34	45 25½	100 53 10		42 7 15		6	M.	D.	Do.
♂ —— 11.	9 4 11	27 22	35 37¾ L	36 42 3	31 17	41 27 15	76	6	K.	D.	☽ à Spica Virg.
	9 4 11	27 22	35 37¾	36 40 37		40 48 45		6	M.	R. 1	Do.
	9 13 33	42 25	34 34½	65 52 5		41 20 15		6	K.	D.	☽ à α Aquilæ.
	9 13 33	42 25	34 34½	65 52 15		41 13 45		6	M.	R. 1	Do.
	9 26 30	23 15	34 21⅛	36 47 35		40 45 0		6	K.	R. 1	☽ à Spica Virg.
	9 26 30	23 15	34 21⅛	36 48 2		40 57 45		6	M.	D.	Do.
	9 36 14	46 56	33 36	65 45 10		41 56 0		6	K.	R. 1	☽ à α Aquilæ.
	9 36 14	46 56	33 36	65 46 0		41 26 30		6	M.	D.	Do.
☿ —— 19.	11 32 18	12 4	21 11	90 47 57	37 27	38 10 30	77	6	M.	D.	☽ à Antares.
	11 40 29	10 58	22 17	90 50 2		38 5 0		6	M.	R.	Do.
	13 31 31	32 5	35 40	57 47 27		38 4 0		6	M.	D.	☽ à α Arietis.
	13 39 29	33 45	36 14	57 45 40		37 39 45		6	M.	R. 1	Do.
♀ —— 21.	18 28 57	17 43½	39 15 U	115 20 35	38 11	37 33 45	75	6	K.	D.	☽ à Sun.
	18 35 24	19 1½	38 18¾	115 20 22		36 44 15		6	K.	R. 1	Do.
	20 4 31	36 22½	24 5¾	114 50 12		36 44 0		5	M.	R. 1	Do.
	20 4 31	36 22½	24 5¾	114 48 45		37 32 0		5	T.	D.	Do.
	20 4 31	36 22½	24 5¾	114 52 6		35 41 15		5	M.	R. 3	Do.
	20 13 6	38 3¾	22 32½	114 45 22		35 35 45		6	M.	D.	Do.
	20 13 6	38 3¾	22 32½	114 47 41		36 19 0		6	T.	R. 3	Do.
	20 13 6	38 3¾	22 32½	114 45 10		37 42 30		6	M.	R. 1	Do.
	20 21 8	39 39½	21 10	114 42 30	38 12	37 29 0	74	6	V.	D.	Do.
	20 21 8	39 39½	21 10	114 44 15		36 34 0		6	P.	R. 1	Do.
	20 21 8	39 39½	21 10	114 43 52		36 44 0		6	G.	R. 3	Do.
	20 28 11	41 1	19 53	114 38 37		38 4 41		6	V.	D.	Do.
	20 28 11	41 1	19 53	114 40 57		36 48 0		6	P.	R. 1	Do.
	20 28 11	41 1	19 53	114 39 52		37 24 0		6	G.	R. 3	Do.
☉ —— 23.	14 59 20	20 30	44 17½	58 7 37	38 30	37 9 45	78	6	K.	D.	☽ à Fomalhaut.
	14 59 20	20 30	44 17½	58 7 50		37 16 15		6	M.	R. 1	Do.
	15 8 33	20 11	45 51½	58 9 55		36 38 45		6	K.	R. 1	Do.
	15 8 33	20 11	45 51½	58 10 47		37 1 45		6	M.	D.	Do.
	15 20 33	24 18	47 43	39 5 42		37 34 30		6	K.	R. 1	☽ à Aldebaran.
	15 20 33	24 18	47 43	39 6 45		37 2 45		6	M.	D.	Do.
	15 27 28	25 33	48 50¾	39 4 50		36 36 0		6	K.	D.	Do.
	15 27 28	25 33	48 50¾	39 4 2		37 0 30		6	M.	R. 1	Do.
	15 46 53	18 20	51 38	58 24 43	38 32	36 56 0	77½	5	V.	R. 1	☽ à Fomalhaut.
	15 46 53	18 20	51 38	58 25 24		36 52 0		5	T.	R. 3	Do.
	15 46 53	18 20	51 38	58 25 51		37 23 0		5	P.	D.	Do.
	15 57 13	17 46	52 59½	58 28 12		36 39 0		5	V.	D.	Do.
	15 57 13	17 46	52 59½	58 28 34		36 50 30		5	T.	R. 1	Do.
	16 57 13	17 46	52 59½	58 29 12		36 54 30		5	P.	R. 3	Do.
	16 7 31	33 40	54 22	38 52 45		36 0 30		5	V.	D.	☽ à Aldebaran.
	16 7 31	33 40	54 22	38 51 21		36 45 15		5	G.	R. 3	Do.
	16 7 31	33 40	54 22	38 50 22		37 10 15		5	P.	R. 1	Do.
	20 5 23	36 16¾	45 29¾	92 25 48	38 42	37 36 15	79	5	K.	D.	☽ à Sun.
	20 5 23	36 16¾	45 29¾	92 28 13		35 46 45		5	M.	R. 1	Do.

1780.	Apparent Time.	Altitude of the ☉'s L. L. or ✱.	Moon's Altitude.	Distance of the ☽'s Limb from the ☉'s, or ✱.	Latitude of the Ship.	Longitude West of Greenwich.	Therm.	N° of Obs.	Observers.	Sextant used.	Objects.
	° ′ ″	° ′	° ′	° ′ ″	° ′	° ′ ″	°				
☉ July 23.	20 20 27	39 14⅓	43 5⅔ U	92 22 15	38 42 N	36 21 15 W	79	6	K.	R. 1	☽ à Sun.
	20 20 27	39 14⅓	43 5⅔	92 22 7		36 25 0		6	M.	R. 3	Do.
	20 20 27	39 14⅓	43 5⅔	92 21 17		36 52 0		6	T.	D.	Do.
	20 38 26	42 41⅓	39 56¾	92 14 45		37 2 15		6	K.	B.	Do.
	20 38 26	42 41⅓	39 56¾	92 16 30		36 6 30		6	M.	R. 1	Do.
	20 38 26	42 41⅓	39 56¾	92 16 5		36 20 0		6	T.	R. 3	Do.
	20 48 57	44 43½	37 59	92 11 22		36 53 30		6	M.	D.	Do.
	20 48 57	44 43½	37 59	92 14 0		35 31 15		6	M.	R. 3	Do.
	20 48 57	44 43½	37 59	92 13 29		35 47 30		6	V.	D.	Do.
	21 22 40	51 2½	31 59⅙	91 58 17		37 22 0		6	K.		Do.
	21 22 40	51 2½	31 59⅙	91 59 27		36 42 30		6	M.		Do.
	21 22 40	51 2½	31 59⅙	92 0 37		36 9 30		6	M.	D.	Do.
	21 22 40	51 2½	31 59⅙	92 0 5		36 24 30		6	V.	R. 3	Do.
	21 28 14	51 52½	31 9½	91 58 37		36 26 30		4	K.		Do.
	21 28 14	51 52½	31 9½	91 57 22		36 57 30		4	M.		Do.
	21 28 14	51 52½	31 9½	91 58 0		36 19 0		4	V.	D.	Do.
☾ —— 25.	18 19 4	15 32⅙	67 42⅙ L	69 22 7	38 57	35 47 45	75	6	K.	R.	Do.
	18 19 4	15 32⅙	67 42⅙	69 21 55		35 51 30		6	M.	D.	Do.
	18 23 52	16 26⅔	68 10⅙	69 20 40		35 48 0		6	K.	D.	Do.
	18 23 52	16 26⅔	68 10⅙	69 21 0		35 36 30		6	M.	R. 1	Do.
	18 44 56	20 29⅙	69 28	69 13 5		36 26 0		6	K.	B.	Do.
	18 44 56	20 29⅙	69 28	69 16 30		34 42 45		6	M.	R. 3	Do.
	18 50 54	21 40⅙	69 43½	69 13 45		36 50 15		6	K.	R. 3	Do.
	18 50 54	21 40⅙	69 43½	69 11 10		35 32 45		6	M.	R.	Do.
	21 6 43	48 3⅔	57 20⅓	68 28 47	39 0	36 20 30	77	6	K.		Do.
	21 6 43	48 3⅔	57 20⅓	68 28 37		36 25 15		6	M.		Do.
	21 6 43	48 3⅔	57 20⅓	68 30 52		35 17 30		6	P.	R. 1	Do.
	21 6 43	48 3⅔	57 20⅓	68 29 37		35 55 30		6	G.	D.	Do.
	21 15 6	49 40½	55 54¾	68 27 5		35 46 15		6	T.	D.	Do.
	21 15 6	49 40½	55 54¾	68 26 25		36 6 0		6	M.	R. 1	Do.
	21 21 50	50 44	54 45⅙	68 26 2		36 54 30		6	T.	R. 1	Do.
	21 21 50	50 44	54 45⅙	68 25 25		36 34 0		6	M.	D.	Do.
	21 29 48	52 20	53 28	68 19 50		36 50 0		3	K.		Do.
	21 29 48	52 20	53 28	68 22 0		35 45 45		3	M.		Do.
	21 29 48	52 20	53 28	68 24 10		35 10 45		3	T.	R. 3	Do.
♃ Aug. 3.	2 33 21	47 38⅓	50 54	42 25 0	44 52	22 48 30	79	6	K.	D.	Do.
	2 33 21	47 38⅓	50 54	42 24 10		22 27 45		6	M.	R. 1	Do.
	2 33 21	47 38⅓	50 54	42 24 37		22 39 45		6	T.	R. 3	Do.
	2 40 13	46 29¼	50 55¾	42 26 50		22 28 30		6	K.	R. 1	Do.
	2 40 13	46 29¼	50 55¾	42 27 30		22 46 15		6	M.	R. 3	Do.
	2 40 13	46 29¼	50 55¾	42 47 57		22 57 45		6	T.	D.	Do.
	2 47 0	45 25⅙	51 6⅔	42 29 25		22 24 0		6	K.	R. 3	Do.
	2 47 0	45 25⅙	51 6⅔	42 30 20		22 48 0		6	M.	D.	Do.
	2 47 0	45 25⅙	51 6⅔	42 30 40		22 56 45		6	T.	R. 1	Do.
	2 58 6	43 30	50 51⅓	42 33 17		22 10 0		6	G.	D.	Do.
	2 58 6	43 36	50 51⅓	42 32 17		21 47 0		6	V.	R. 3	Do.
	3 4 59	42 23⅙	50 39½	42 37 7		22 37 45		6	G.	R. 3	Do.
	3 4 59	42 23⅙	50 39½	42 37 5		22 37 45		6	V.	D.	Do.
	3 12 39	41 7⅔	50 29	42 40 7		22 41 15		6	G.	R. 3	Do.
	3 12 39	41 7⅔	50 29	42 38 52		22 7 15		6	V.	R. 1	Do.
	3 12 39	41 7⅔	50 29	42 41 0		23 4 15		6	P.	D.	Do.
☾ —— 4.	3 5 30	42 10	43 8⅛	56 20 30	45 14	21 18 30	75	6	K.	D.	Do.

1780.	Apparent Time. H. ′ ″	Altitude of the ☉'s L. L. or ✱. ° ′	Moon's Altitude. ° ′	Distance of the ☽'s Limb from the ☉'s, or ✱. ° ′ ″	Latitude of the Ship. ° ′	Longitude West of Greenwich. ° ′ ″	Therm. °	No of Obs.	Observers.	Sextant used.	Objects.
♀ Aug. 4.	3 5 36	42 10	43 8½ U	56 21 5	45 14 N	21 34 0 W	75	6	M.	R. 1	☽ à Sun.
	3 5 36	42 10	43 8½	56 21 45		21 52 0		6	T.	R. 3	Do.
	3 12 50	40 55⅓	43 16¼	56 23 25		21 21 15		6	K.	R. 1	Do.
	3 12 50	40 55⅓	43 16¼	56 23 50		21 32 15		6	M.	R. 3	Do.
	3 12 50	40 55⅓	43 16¼	56 24 2		21 37 45		6	T.	D.	Do.
	3 20 32	39 39	43 24	56 25 57		21 8 45		6	K.	R. 3	Do.
	3 20 32	39 39	43 24	56 26 30		21 23 30		6	M.	D.	Do.
	3 20 32	39 39	43 24	56 27 20		21 46 0		6	T.	R. 1	Do.
	3 30 15	38 0½	43 22½	56 29 37		21 4 0		6	V.	R. 3	Do.
	3 30 15	38 0½	42 22½	56 30 5		21 16 45		6	G.	D.	Do.
	3 30 15	38 0½	43 22½	56 32 32		22 22 30		6	P.	R. 1	Do.
	3 35 50	36 53	43 33	56 34 0		22 2 30		6	V.	R. 1	Do.
	3 35 50	36 53	43 33	56 32 12		21 14 0		6	G.	R. 3	Do.
	3 35 50	36 53	43 33	56 33 0		21 35 30		6	P.	D.	Do.
	3 41 22	36 6¾	43 33⅓	56 34 42		21 27 45		6	V.	D.	Do.
	3 41 22	36 6¾	43 33⅓	56 36 32		21 21 15		6	G.	R. 1	Do.
	3 41 22	36 6¾	43 33⅓	56 35 0		21 36 0		6	P.	R. 3	Do.
☉ —— 6.	3 13 36	39 51	24 9	82 37 45	46 44	19 4 30	74	6	K.	D.	Do.
	3 13 36	39 51	24 9	80 37 55		19 8 15		6	M.	R. 1	Do.
	3 13 36	39 51	24 9	80 37 52		19 7 0		6	T.	R. 3	Do.
	3 37 2	36 1½	26 3¾	82 46 22		18 46 45		6	K.	R. 1	Do.
	3 37 2	36 1½	26 3¾	82 47 37		19 20 30		6	M.	R. 3	Do.
	3 37 2	36 1½	26 3¾	82 47 42		19 24 15		6	T.	D.	Do.
	3 41 50	35 14½	26 23¾	82 49 15		19 14 45		6	K.	R. 3	Do.
	3 41 50	35 14½	26 23¾	82 49 40		19 26 30		6	M.	D.	Do.
	3 41 50	35 14½	26 23¾	82 50 0		19 38 30		6	T.	R. 1	Do.
	3 48 51	34 1¾	26 44⅓	82 54 22		19 25 45		6	V.	D.	Do.
	3 48 51	34 1¾	26 44⅓	82 48 20		19 36 45		6	P.	R. 1	Do.
	3 54 15	33 5⅔	27 3⅓	82 54 57		19 25 45		6	V.	D.	Do.
	~~3 54 15~~	~~33 5⅔~~	~~27 3⅓~~	~~82 54 50~~		19 36 45		6	P.	R. 1	Do.
	4 1 26	31 54⅓	27 27	82 58 52		20 13 0		6	V.	R. 3	Do.
	4 1 26	31 54⅓	27 27	82 57 10		19 24 0		6	P.	D.	Do.
☿ —— 9.	5 56 22	8 58¾	22 37⅔	119 51 47	51 28	13 44 30	67	6	K.	R. 1	Do.
	5 56 22	8 58¾	22 37⅔	119 52 19		13 48 0		6	M.	D.	Do.
	6 2 18	9 23½	11 43⅓	119 54 55		14 9 45		6	K.	D.	Do.
	6 2 18	9 23½	11 43⅓	119 54 20		13 51 30		6	M.	R. 1	Do.
	6 9 46	19 53⅔	10 36¾	119 57 40		14 9 45		6	K.	D.	Do.
	6 9 46	19 53⅔	10 36¾	119 57 42		14 9 45		6	M.	R. 3	Do.
	6 15 42	10 12¾	9 41	119 58 42		13 44 30		6	K.	R. 3	Do.
	6 15 42	10 12¾	9 41	119 58 25		14 1 15		6	M.	D.	Do.
☽ —— 14.	12 26 16	37 13	16 5 L	74 23 50	53 0	15 50 0	62	6	K.	D.	☽ à α Arietis.
	12 26 16	37 13	16 5	74 25 40		14 53 15		6	M.	R. 1	Do.
	12 36 9	38 52	15 48	74 20 42		15 37 30		6	K.	R. 1	Do.
	12 36 9	38 52	15 48	74 22 15		14 49 30		6	M.	D.	Do.
	12 48 59	40 25	15 41	74 15 42		15 33 30		6	K.	D.	Do.
	12 48 59	40 25	15 41	74 16 0		15 24 15		6	M.	R. 3	Do.
	12 59 29	42 52	15 22¾	74 11 5		15 51 30		6	K.	R. 3	Do.
	13 59 29	42 52	15 22¾	74 12 42		15 15 0		6	M.	D.	Do.
	12 18 19	44 24	14 41½	73 33 52		15 57 30		6	K.	R. 1	Do.
	13 18 19	44 24	14 41½	73 33 45		14 59 15		6	M.	D.	Do.
	13 28 6	45 41	14 14½	73 30 32		15 40 45		6	K.	R. 1	Do.
	~~13 28 6~~	~~45 41~~	~~14 14½~~	73 28 40		16 8 0		6	M.	D.	Do.

780.	Apparent Time.	Altitude of the ☉'s L. L. or ✱.	Moon's Altitude.	Distance of the ☽'s Limb from the ☉'s, or ✱.	Latitude of the Ship.	Longitude West of Greenwich.	Therm.	N° of Obs.	Observers.	Sextant used.	Objects.
	H. ′ ″	° ′	° ′	° ′ ″	° ′	° ′ ″	°				
☾ Aug. 18.	9 45 41	41 52	8 30 1/6 L	74 37 25	56 6 N	11 30 30 W	61	6	K.	D.	☽ à α Aquilæ.
	9 45 41	41 52	8 30 1/6	74 39 47		12 58 45		6	M.	R. 1	Do.
	9 54 59	42 0	9 46 3/4	74 42 12		11 57 45		6	K.	R. 1	Do.
	9 54 59	42 0	9 46 3/4	74 42 0		11 50 15		6	M.	D.	Do.
	10 7 53	42 6	11 28 1/2	74 46 47		11 35 15		6	K.	D.	Do.
	10 7 53	42 6	11 28 1/2	74 48 10		12 33 45		6	M.	R. 3	Do.
	10 17 9	41 50	12 42 1/6	74 50 15		11 35 30		6	K.	R. 3	Do.
	10 17 9	41 50	12 42 1/6	74 50 52		11 58 15		6	M.	D.	Do.

AZIMUTHS OF THE SUN's CENTER,

TAKEN WITH DIFFERENT AZIMUTH COMPASSES;

TOGETHER WITH

THE ALTITUDES OF THE SUN's LOWER LIMB,

TAKEN AT THE SAME TIME WITH A HADLEY's SEXTANT,

FOR DETERMINING

THE VARIATION OF THE MAGNETIC NEEDLE.

By Captain COOKE and OFFICERS,

On Board His Majesty's Sloop Resolution,

DURING HIS LAST VOYAGE

In the Years 1776, 77, 78, 79, 80.

1776.	Alt. of the ☉'s L. L.	Azimuth of the ☉'s Center observed.	Variation.	Compaſs uſed.	Latitude in.	Longitude in.	Obſerv.	N° of Obſervations.	Remarks.
	° ′	° ′	° ′ ″		° ′	° ′			
♃ July 13.	7 7	N 42 19 W	20 36 30 W		50 8 N	4 40 W		4	
	6 16	41 15	19 49 0					4	
	4 22	38 52	20 29 45					6	
☿ —— 17.	8 46	45 25	22 38 20		48 44	5 0		6	Ship very ſteady
	7 44	45 20	21 36 20					3	
	6 57	41 58	23 47 20					3	
	20 28	S 73 22 E	25 18 0		48 35	5 17		3	
	21 48	73 2	24 50 10					4	
♃ —— 25.	18 40	N 55 37 W	22 27 0		40 41	11 10		4	
	15 48¼	51 21	23 25 0					4	
☉ —— 28.	26 43¼	S 73 58 E	18 7 0	K. N° 1.	33 45	14 50	B.	6	A tumbling ſea.
	29 18⅔	74 45	18 55 0	G. — 1.			B.	6	Much Motion.
☽ —— 29.	9 46	N 55 5 W	19 29 0	Do. rev.	33 4	14 50	C.	3	
	8 12¾	55 36	18 38 0	K. — 1.	32 4	14 50	C.	3	
	18 42⅔	S 81 50 E	18 26 0	Do. rev.			C.	6	
	20 56	80 49	18 11 0	G. — 1.			C.	5	
	23 54	78 31	18 35 0	M.			C.	4	
♂ —— 30.	11 23¼	N 57 44 W	17 43 0	K. — 1.	31 8	15 30	B.	4	Fine weather.
	7 56¾	35 55	19 21 0	M.			B.	4	
	9 25¼	56 31	17 47 0	G. — 1.			B.	4	
♄ Aug. 3.	15 20	S 87 34 E	14 0 0	Do. rev.	28 30	17 0	B.	6	
	22 20⅓	82 46	15 41 0	K. — 1.			B.	6	
	25 3¼	82 54	14 23 0	M.			B.	6	
♂ —— 6.	21 46¾	65 59	15 4 0	G. — 1.	23 54	18 20	C.	4	Flying clouds.
	19 47	64 52	15 20 0	K. — 1.			C.	4	
♃ —— 8.	20 10⅓	N 66 11 W	14 35 0	G. — 1.	20 30	20 3	B.	6	
	21 48	66 11	14 30 0	K. — 1.			B.	6	
	15 21	64 11	13 52 0	M.			B.	6	
	11 38	S 89 22 E	13 14 0	K. — 1.	19 46		B.	5	
	16 39	87 5	13 11 0	G. — 1.	19 45	20 39	B.	5	
	19 27	87 10	13 36 0	M.	19 35		B.	5	
♄ —— 10.	18 24	N 68 54 W	10 12 0	K. — 1.			B.	4	
	16 0	67 57	10 33 0	G. — 1.	16 37	22 50	B.	4	Ship very ſteady
	14 48	66 37	11 37 0	M.			B.	4	
☉ —— 11.	17 12¼	65 45	12 39 0	K. — 1.	15 42	23 22	B.	4	
	15 26	66 34	12 25 0	M.			B.	4	
	14 25	67 11	11 1 0	G. — 1.			B.	4	
	11 51	87 37	9 54 0	K. — 1.	15 25	23 36	B.	4	
	13 34	87 57	9 50 0	K. — 2.			B.	4	
	15 10	88 16	9 52 0	G. — 1.			B.	4	
	19 0	89 32	10 11 0	Do. rev.			B.	4	

In the column of the Compaſs-makers—G. ſtands for Gregory—K. for Knight—and M. for Martin—and the numbers 1, 2, &c. for different compaſſes by the ſame maker—and rev. for reverſed. In the column of Obſervers—C. ſtands for Cooke—K. for King—and B. for Bligh.

1776.	Alt. of the ☉'s L. L.	Azimuth of the ☉'s Center observed.	Variation.	Compass used.	Latitude in.	Longitude in.	Observ.	No of Observations.	Remarks.
	° ′	° ′	° ′ ″		° ′	° ′			
☉ Aug. 11.	21 2	N 89 38 W	9 15 0 W	M.	15 25 N	23 36 W	B.	4	Fine weather.
♂ —— 13.	10 20	N 87 15 E	9 25 0	G. N° 1.	13 32	23 45	B.	4	
	12 34	87 57	9 31 0	K. — 2.			B.	4	
☿ —— 14.	8 15½	87 24	9 52 40	K. — 1.	12 22		B.	3	
	10 13¼	88 33¾	9 37 20	K. — 2.			B.	4	
	12 25	88 0	9 43 0	G. — 1.			B.	4	
	13 21	87 55	9 16 20	Do. rev.			B.	3	
	18 23	88 40	9 48 0	M.	12 21	23 54	B.	4	
	18 35	89 0	9 16 0	Do. rev.			B.	4	
♃ —— 15.	10 37¾	86 33	8 19 40	G. — 1.	11 51	24 5	B.	4	A great motion.
	14 51¾	87 5	8 8 20	Do. rev.			B.	4	
	12 9	86 38	8 8 40	K. — 1.			B.	4	
	12 50¼	86 37½	8 1 10	Do. rev.			B.	4	
☉ —— 18.	53 21¾	89 52	8 58 0	G. — 1.	8 55	22 50	C.	4	
	55 33	S 86 36 E	9 39 0	Do. rev.			C.	4	
	58 42	89 38	9 56 0	K. — 1.			C.	4	
	59 53½	N 89 33 E	9 25 40	Do. rev.			C.	4	
	61 55½	S 87 37½ E	12 24 20	M.			C.	4	
	63 33	N 85 3⅓ E	5 24 20	Do. rev.			C.	4	
☿ —— 21.	6 8½	S 89 35 E	11 24 40	G. — 1.			C.	4	
	8 36	90 21½	9 52 5	Do. rev.			C.	4	
	10 49	89 28¾	10 14 15	G. — 2.			C	4	Ship very steady
	11 45½	89 55	9 55 10	Do. rev.			C.	4	
	13 7½	90 55	9 53 20	K. — 1.			C.	5	
	15 45	90 7	10 17 40	Do. rev.			C.	5	
	18 4	89 34	10 51 41	K. — 2.	6 33	19 2	C.	4	
	21 22	90 1¼	10 30 25	Do. rev.			C.	4	
	25 55	89 26¼	10 11 45	M.			C.	5	
	27 23	89 20	10 17 20	Do. rev.			C.	5	
	28 54	90 33¾	9 31 15	K. — 3.			C.	5	
	29 41	89 2	10 52 20	Do. rev.			C.	12	
☽ —— 22.	25 20	N 70 40 W	9 44 0	G.	6 29	20 5	C.	4	
	24 20	69 34	10 48 0	Do. rev.			C.	4	
	22 38	67 45	12 33 0	K. — 2.				4	
	21 49	69 53	10 23 0	Do. rev.				3	
	19 18	68 26	11 42 0	K. — 1.				5	
	18 19	69 34	10 26 0	Do. rev.				5	
	17 14	67 48	12 12 0	M.				3	
	16 11	68 0	11 57 0	Do. rev.				4	
	13 21	N 89 55 E	10 2 0	G.	6 9	19 10	B.	4	Fine weather.
	15 0	90 21	10 22 15	Do. rev.			B.	4	
	17 5	90 9	10 2 40	K. — 1.			B.	4	
	17 59	90 1	9 51 40	Do. rev.			B.	4	
	19 53	90 49	10 43 40	K. — 2.			B.	4	
	20 57	91 10	10 52 20	Do. rev.			B.	4	
☿ —— 25.	10 15		9 1 45	G.	4 23	21 2	C.	4	

1776.	Alt. of the ☉'s L. L.	Azimuth of the ☉'s Center observed.	Variation.	Compass used.	Latitude in.	Longitude in.	Observ.	No. of Observations	Remarks.
	° ′	° ′	° ′ ″		° ′	° ′			
☉ Aug. 25.	13 20		9 2 17 W	G. rev.	4 23 N	21 2 W	C.	7	Fine weather.
	15 34		9 15 30	K. N° 1.			C.	6	
	16 44		8 46 0	Do. rev.			C.	6	
	18 16		10 4 50	Do. — 2.			C.	6	
	19 31		8 20 28	Do. rev.			C.	6	
☽ —— 26.	24 16	N 12 13 W	8 30 0	G.	3 59	22 26	B.	4	Do.
	22 51	72 9	8 31 0	Do. rev.			B.	4	
	20 38	71 30	9 10 0	K. — 1.			B.	4	
	19 47	72 40	8 2 0	Do. rev.			B.	4	
	8 20	N 89 21 E	8 47 0	G.			B.	4	
	10 21	89 6	8 30 0	Do. rev.			B.	4	
	12 39	89 11	8 27 0	K. — 1.	3 45	22 34	B.	4	
	15 34	88 53	8 5 0	Do. rev.			B.	4	
	18 8	89 42	8 52 0	K.			B.	4	
	19 21	89 52	9 2 0	Do. rev.			B.	4	
	22 57	89 7	8 15 0	K.			B.	4	
	25 38	89 48	8 58 0	Do. rev.			B.	4	
♂ —— 27.	16 10	N 72 31⅓ W	8 24 0	G.	3 37	23 20	B.	3	Ship steady.
	15 14	72 20	8 34 0	Do. rev.			B.	3	
	13 58	72 25	8 28 20	K. — 1.			B.	3	
	10 44	72 35	8 13 0	Do. rev.			B.	3	
	9 14½	72 3¾	8 40 40	K. — 2.			B.	3	
	8 15¾	71 28¾	9 13 15	Do. rev.			B.	3	
		72 17½	7 58 30	G.	3 30		B.	3	Amplitude.
♃ —— 29.	22 46	73 38	7 42 0	G.	2 40	24 10	B.	6	
	20 16	73 25	7 56 0	Do. rev.			B.	6	
	17 54	73 15	8 7 0	K. — 1.			B.	3	
	21 57	N 88 17 E	6 49 0		2 17	24 50	B.	8	
♀ —— 30.	25 50	N 75 0 W	6 24 0	G.	2 5	25 30	C.	4	
	24 6	75 0	6 56 0	Do. rev.			C.	4	
	22 34	74 45	6 45 0	K. — 1.			C.	4	
	21 11	75 22	6 10 0	Do. rev.			C.	4	
	6 12¾	N 87 15 E	5 35 10	G.	1 14	26 2	C.	4	Fine weather.
	7 5½	87 53	6 12 40	Do. rev.			C.	4	
	8 48½	87 15⅔	5 34 40	K. — 1.			C.	4	
	9 44	87 1	5 21 20	Do. rev.			C.	4	
	11 19	84 59	3 19 40	K. — 2.			C.	4	
	12 42	84 56	3 17 10	Do. rev.			C.	4	
	14 36	86 34	4 56 40	M.			C.	4	
	16 17	87 22	5 46 50	Do. rev.			C.	4	
♄ —— 31.	17 39	N 81 34 W	4 59 0	G.	0 51	27 10	C.	4	Do.
	16 47	81 36	4 52 0	Do. rev.			C.	4	
	14 59	81 38	5 54 0	K. — 1.			C.	4	
	14 18	81 40	4 42 0	Do. rev.			C.	4	
	12 20	81 42	5 5 0	K. — 2.			C.	4	
	11 31	81 44	5 56 0	Do. rev.			C.	4	

1776.	Alt. of the ☉'s L. L.	Azimuth of the ☉'s Center observed.	Variation.	Compass used.	Latitude in.	Longitude in.	Observ.	N° of Observations.	Remarks.
	° ′	° ′	° ′ ″		′	° ′			
♄ Aug. 31.	9 51	N 81 44 W	3 55 0 W	M.	0 51 N	27 10 W	C.	4	Fine weather.
	8 29	81 46	6 41 0	Do. rev.			C.	4	
	8 14	N 86 14 E	4 27 0	G.	0 7	27 0	B.	4	
	8 17	86 27	4 45 0	Do. rev.			B.	4	
	10 45	86 20	4 53 0	K. N° 1.			B.	4	
	12 0	86 3	4 25 0	Do. rev.			B.	4	
	16 53	87 10	5 35 0	K. — 2.			B	4	
	17 45	86 12	4 49 0	Do. rev.			B.	4	
☉ Sept. 1.	19 28	S 98 30 E	3 12 0	K.	1 13 S	28 58	C.	4	
	20 47	98 36	3 36 0	Do. rev.			C.	4	
	23 4	98 18	3 4 0	M.			C.	4	
	25 20	99 0	4 22 0	Do. rev.			C.	4	
	9 43	97 54	2 56 0	G.			C.	4	
	12 32	98 2	3 45 0	Do. rev.			C.	4	
	14 58	98 10	3 39 0	K. — 1.			C.	4	
	16 52	98 38	3 1 0	Do. rev.			C.	4	
☽ — 2.	15 29	S 101 58 W	3 26 40	G.	1 50	30 10	B.	4	
	13 30	101 56¼	3 43 0	Do. rev.			B.	4	
	11 6	101 50	3 47 0	K. — 1.			B.	4	
	7 35	101 1	3 9 0	Do. rev.			B.	4	
		N 79 15 W	3 14 0	G.			B.	4	
	8 33	N 85 4 E	2 52 0	G.	2 48	29 37	C.	4	
	10 31	84 52	2 50 0	Do. rev.			C.	4	
	12 7	84 47	2 49 0	K. — 1.			C.	4	
	13 36	85 9	3 23 0	Do. rev.			C.	4	
	15 37	83 56	2 20 0	K. — 2.			C.	4	
	16 28	85 56	4 26 0	Do. rev.			C.	4	
	19 16	84 37	3 23 0	M.			C.	4	
	21 3	84 38	3 36 0	Do. rev.			C.	4	
♂ — 3.	26 45	N 77 52 W	2 14 0	G.	3 37	30 14	B.	4	
	25 19	77 49	2 29 0	Do. rev.			B.	4	
	21 35	78 41	2 7 0	K. — 1.			B.	4	
	20 15	78 4	2 56 0	Do. rev.			B.	4	
	11 12	78 35	3 23 0	M.			B	4	
	10 18	78 53	3 9 0	Do. rev.			B.	4	
	7 53	77 55	3 48 0	K. — 2.			B.	4	
	6 45	79 5	3 15 0	Do. rev.			B.	4	
	11 22	N 84 54 E	2 54 0	G.	4 22	30 29	B.	4	
	13 16	84 46	2 58 0	Do. rev.			B.	4	
	15 12	83 24	1 48 0	K. — 1.			B	4	
	16 42	83 27	2 3 0	Do. rev.			B.	4	
	18 47	83 10	2 2 0	K. — 2.			B.	4	
	19 47	83 40	2 40 0	Do. rev.			B.	4	
	21 29	83 11	2 27 0	M.			B.	4	
	23 15	84 33	4 3 0	Do. rev.			B.	4	
☿ — 4.	24 5	N 78 48 W	1 26 0	G.	5 0	31 40	B.	4	

1776.	Alt. of the ☉'s L. L.	Azimuth of the ☉'s Center observed.	Variation.	Compass used.	Latitude in.	Longitude in.	Observ.	N° of Observations.	Remarks.
	° ′	° ′	° ′ ″		° ′	° ′			
☿ Sept. 4.	21 44	N 78 33 W	2 3 0 W	G. rev.	5 0 S	31 40 W	B.	4	Fine weather.
	16 40	78 49	2 31 0	K. N° 1.			B.	4	
	12 14	79 45	2 11 0	Do. rev.			B.	4	
	17 30	N 82 32 E	1 12 0	G.	5 34	32 7	B.	4	Ship much motion.
	20 14	82 16	1 24 0	K. — 1.			B.	4	
	21 47	82 6	1 28 0	K. — 2.			B.	4	
	19 51	82 19	1 22 0	M.			B.	4	
♃ — 5.	11 59	82 18	0 6 0	G.	6 0	32 50	C.	4	
	10 12	82 18	0 30 0	Do. rev.			C.	4	
	7 47	82 40	0 44 0	K. — 1.			C.	4	
	6 34	82 48	0 6 0	Do. rev.			C.	4	
	7 12	82 13	0 35 40 E	G.	6 45	33 30	C.	4	Ship steady.
	8 55	82 28	0 6 0	Do. rev.			C.	4	
	10 52	81 10	1 7 20	K. — 1.			C.	4	
	12 18	82 19	0 14 20 W	Do. rev.			C.	4	
	13 59	80 34	1 14 40 E	K. — 2.			C.	4	
	15 8	82 56	1 18 40 W	Do. rev.			C.	4	
	17 23	79 34	1 40 40 E	M.			C.	4	
	18 30	79 48	1 16 0	Do. rev.			C.	4	
♀ — 6.	19 46½	81 51¼	1 5 2	G.	7 18	34 7	C.	6	
	18 9	80 58	0 6 0	Do. rev.			C.	6	
	15 59	81 35	0 7 0	K. — 1.			C.	5	
	15 10½	82 27	0 51 0	Do. rev.			C.	5	
	10 43	81 40	0 40 0 W	M.			C.	5	
	9 34	82 23	0 3 0	Do. rev.			C.	5	
	8 5	80 52	1 52 0	K. — 2.			C.	5	
	7 28½	81 56	0 54 0	Do. rev.			C.	5	
	9 50½	82 45	0 7 0	G.	7 50	34 20	C.	4	
	12 4¼	82 12	1 20 0	Do. rev.			C.	4	
	14 15½	82 11	0 18 0	K. — 1.			C.	6	
	15 36¾	81 45	0 6 40	Do. rev.			C.	4	
	17 52	81 20	0 7 0	K. — 2.			C.	4	
	18 37	81 37	0 42 20	Do. rev.			C.	4	
	19 55½	80 48	0 1 20 E	M.			C.	4	
	27 7	80 58	0 21 20 W	Do. rev.			C.	4	
♄ — 7.	8 10	83 21	0 15 0	G.	8 43	34 20	C.	4	Fine weather.
	9 48	82 41	0 8 0 E	Do. rev.			C.	4	
	11 30	82 17	0 13 0	K. — 1.			C.	4	
	12 28	82 15	0 5 0	Do. rev.			C.	4	
	14 27	82 19	0 21 0 W	K. — 2.			C.	4	
	15 17	81 35	0 9 0 E	Do. rev.			C.	4	
	18 6	81 46	0 32 0 W	M.			C.	4	
	19 12	82 8	1 8 0	Do. rev.			C.	4	
☉ — 8.	19 40	N 81 41 W	0 44 40 E	G.	9 1	34 50	C.	4	
	18 9	81 31	0 15 20	Do. rev.			C.	4	
	16 8	82 27	0 45 40	K. — 1.			C.	4	

1776.	Alt. of the ☉'s L. L.	Azimuth of the ☉'s Center observed.	Variation.	Compass used.	Latitude in.	Longitude in.	Observ.	N° of Observations	Remarks.
	° ′	° ′	° ′ ″		° ′	° ′			
☉ Sept. 8.	14 57	N 82 30 W	0 34 0 E	K. 1. rev.	9 1 S	34 50 W	C.	4	Fine weather.
	12 16	82 35	0 14 0	K. N° 2.			C.	4	
	8 30	83 7	0 2 20 W	Do. rev.			C.	4	
	9 32	83 2	0 8 0 E	G.	9 35	34 52	C.	4	
	12 7	82 41	0 3 0 W	Do. rev.			C.	4	
	14 22	82 5	0 5 0 E	K. — 1.			C.	4	
	15 13	82 10	0 10 0 W	Do. rev.			C.	4	
	17 26	82 6	0 23 0	K. — 2			C.	4	
	18 45	81 25	0 11 0	Do. rev.			C.	4	
	20 46	80 0	0 58 0 E	M.			C.	4	
	21 38	80 3	0 29 0	Do. rev.			C.	4	
☽ — 9.	21 54	80 29	0 0 20	G.			C.	4	
	19 47	80 21	0 38 40 W	Do. rev.	10 4	34 49	C.	4	
	17 35	80 44	0 46 0	K. — 1.			C.	4	
	15 43	82 59	1 3 40 E	Do. rev.			C.	4	
	14 8	81 50	0 26 0 W	K. — 2.			C.	4	
	11 3	82 24	0 31 0	Do. rev.			C.	4	
	9 50	81 37	1 33 0	M.			C.	4	
	8 26	82 18	1 8 40	Do. rev.			C.	4	
	5 44	N 83 36 E	0 24 45 E	G.	11 1	34 49	C.	4	
	24 47	77 33	0 11 20 W	Do. rev.			C.	4	
♂ — 10.	6 15	82 55	1 12 0 E	G.	12 40		C.	4	
	7 3	82 56	0 59 0	Do. rev.			C.	4	
	8 13	82 40	0 59 40	K. — 1.			C.	4	
	9 1	82 7	1 19 40	Do. rev.			C.	4	
	10 10	83 1	0 6 20	K. — 2.			C.	4	
	10 43	82 27	0 33 30	Do. rev.			C.	4	
	12 39	82 4	0 27 20	M.			C.	4	
	14 4	81 54	0 15 50	Do. rev.			C.	4	
☿ — 11.	22 56	N 80 26 W	1 1 20	G.	13 23	34 49	C.	4	
	21 27	80 29	0 38 0	Do. rev.			C.	4	
	16 48	82 6	0 48 20	K. — 1.			C.	4	
	15 56	83 16	1 43 20	Do. rev.			C.	4	
	13 56	82 25	0 18 40	K. — 2.			C.	4	
	13 1	82 6	0 16 0	Do. rev.			C.	4	
	11 33	83 24	0 37 40 W	M.			C.	4	
	10 28	83 34	0 30 0	Do. rev.			C.	4	
	7 47	N 82 45 E	1 9 0 E	G.	14 11	34 49	C.	4	
	9 58	83 6	0 12 0	Do. rev.			C.	4	
	12 58	82 0	0 40 0	K. — 1.			C.	4	
	13 30	81 34	0 44 0	Do. rev.			C.	4	
	15 41	81 17	0 22 20	K. — 2.			C.	4	
	17 0	81 16	0 0 0	Do. rev.			C.	4	
	18 56	81 0	0 19 40 W	M.			C.	4	
	19 59	80 37	0 17 0	Do. rev.			C.	4	
♃ — 12.	6 43	82 32	1 51 30 E	G.	15 33	34 40	C.	4	

1776.	Alt. of the ☉'s L. L.	Azimuth of the ☉'s Center observed.	Variation.	Compass used.	Latitude in.	Longitude in.	Observ.	N° of Observations.	Remarks.
	° ′	° ′	° ′ ″		° ′	° ′			
24 Sept. 12.	7 37	N 82 34 E	1 33 0 E	G. rev.	15 33 S	34 40 W	C.	4	Fine weather.
	9 5	81 50	1 50 0	K. N° 1.			C.	4	
	10 45	82 15	0 55 0	Do. rev.			C.	4	
	12 46¼	81 32	1 0 30	K. — 2.			C.	4	
	13 51½	81 15	0 57 30	Do. rev.			C.	4	
	15 14	80 1	1 42 45	M.			C.	4	
	16 20	80 35	0 50 0	Do. rev.			C.	4	
♀ —— 13.	23 23¾	N 80 55 W	2 4 0	G.	16 12	35 20	C.	4	
	21 56¼	81 7½	1 43 30	Do. rev.			C.	4	
	20 2	82 11¼	2 4 45	K. — 1.			C.	4	
	18 51¼	82 55	2 23 30	Do. rev.			C.	4	
	16 39½	82 5	0 48 30	K. — 2.			C.	4	
	15 21½	82 55	1 15 0	Do. rev.			C.	4	
	13 9¾	83 47½	1 21 0	M.			C.	4	
	11 52	83 32½	0 40 30	Do. rev.			C.	4	
	11 40	88 17	1 48 0	G.			C.	4	
	25 6	N 75 38¾ E	2 15 55	G.			C.	4	
	26 15¾	74 50	2 45 20	Do. rev.			C.	4	
♄ —— 14.	21 14½	N 82 22½ W	2 55 50	G.	17 40	35 48	C.	4	
	20 0¾	82 48¾	2 53 10	Do. rev.			C.	4	
	17 49½	83 2½	2 16 15	K. — 1.			C.	4	
	16 12¼	85 0	2 38 20	Do. rev.			C.	4	
	13 42¼	84 26¼	2 9 15	K. — 2.			C.	4	
	11 58	84 41¼	1 47 50	Do. rev.			C.	4	
	8 14	85 40	1 30 0	M.			C.	4	
	6 47¾	85 57½	1 18 10	Do. rev.			C.	4	
	10 20¾	N 80 26¼ E	3 2 25	G.	18 30	35 50	C.	4	
	11 43	80 2½	2 56 10	Do. rev.			C.	4	
	14 8¾	79 48¾	2 16 15	K. — 1.			C.	4	
	16 5	78 28¾	2 52 55	Do. rev.			C.	4	
	18 52½	78 41¼	1 34 5	K. — 2.			C.	4	
	20 49¾	77 43¾	1 43 55	Do. rev.			C.	4	
	23 5¼	76 20	2 11 0	M.			C.	4	
	24 48¼	76 7½	1 38 10	Do. rev.			C.	4	
☉ —— 15.	18 27½	N 85 46½ W	5 26 10	G.	20 8	36 1	C.	4	
	12 51¼	86 10	3 37 20	Do. rev.			C.	4	
	10 25¼	87 0	3 32 0	K. — 1.			C.	4	
	8 47¾	87 38¾	3 34 20	Do. rev.			C.	4	Ship in great motion.
☽ —— 16.	24 2	80 16	2 42 40	G.	20 46	36 7	C	4	Fine weather.
	22 34	80 36	2 20 0	Do. rev.			C.	4	
	20 57	81 54	2 52 40	K. — 1.			C.	4	
	20 0	83 47	4 19 20	Do. rev.			C.	4	
	18 41	82 52	2 49 0	K. — 2.			C.	4	
	17 47	82 12	1 44 40	Do. rev.			C.	4	
	16 39	84 12	1 47 20	M.			C.	4	
	15 34	83 12	3 15 20	Do. rev.			C.	4	

1776.	Alt. of the ☉'s L. L.	Azimuth of the ☉'s Center observed.	Variation.	Compass used.	Latitude in.	Longitude in.	Observ.	N° of Observations	Remarks.
	° ′	° ′	° ′ ″		° ′	° ′			
☽ Sept. 16.	9 5	N 80 46 E	3 24 15 E	G.	21 37 S	36 9 W	C.	4	Fine weather.
	11 13	80 15	3 14 15	Do. rev.			C.	4	
	13 44	79 25	3 6 0	K. N° 1.			C.	4	
	15 32	78 15	2 49 15	Do. rev.			C.	4	
	17 46	78 15	2 26 30	K. — 2.			C.	4	
	21 31	76 0	2 23 45	Do. rev.			C.	4	
	23 6	75 34	2 27 0	M.			C.	4	
	23 43	74 57	2 7 30	Do. rev.			C.	4	
♂ —— 17.	15 29	84 44	3 24 0	G.	24 17	36 8	C.	4	
	13 43	85 22	3 16 0	Do. rev.			C.	4	
	12 30	85 35	2 55 0	K. — 1.			C.	4	
	11 33	85 54	2 50 0	Do. rev.			C.	4	
	10 0	86 12	2 24 0	K. — 2.			C.	4	
	8 42	86 44	2 24 0	Do. rev.			C.	4	
	7 6	87 28	2 28 0	M.			C.	4	
	5 58	87 38	2 7 0	Do. rev.			C.	4	
♃ —— 19.	17 22	N 83 51¼ W	3 56 30	G.	25 54	35 0	C.	4	
	13 30⅙	85 35¾	3 36 35	K. — 2.			C.	4	
	11 53⅓	86 10	3 19 45	M.			C.	4	
	9 35⅔	87 18¾	3 17 15	K. — 1.			C.	4	
	19 6	N 75 11¼ E	3 44 25	G.	26 47	34 27	C.	4	
	19 37½	75 11¼	3 23 45	Do. rev.			C.	4	
	21 0	74 56¼	2 49 45	K. — 1.			C.	4	
	21 32	74 7½	3 19 10	Do. rev.			C.	4	
	22 25	73 40	3 14 0	K. — 2.			C.	4	
	23 24½	73 37½	2 39 30	Do. rev.			C.	4	
	24 35⅓	71 30	4 2 20	M.			C.	4	
	25 32	71 56¼	2 59 25	Do. rev.			C.	4	
♀ —— 20.	10 33½	N 87 7½ W	3 26 10	G.	27 14	33 14	C.	4	
	9 51	86 50	2 46 20	Do. rev.			C.	4	
	8 15½	88 21¼	3 25 15	K. — 1.			C.	4	
	7 25¼	88 35¾	3 13 45	Do. rev.			C.	4	
	5 58	89 6¼	2 57 15	K. — 2.			C.	4	
	5 7	89 20	2 44 0	Do. rev.			C.	4	
	6 31¼	N 82 46¼ E	3 13 45	G.	27 44	33 7	C.	4	
	7 13	82 52½	2 44 30	Do. rev.			C.	4	
	8 25½	81 58¼	3 0 15	K. — 1.			C.	4	
	8 54½	81 48¾	2 53 15	Do. rev.			C.	4	
	9 43¼	83 33¾	1 40 45	K. — 2.			C.	4	
	10 12½	82 2½	1 56 15	Do. rev.			C.	4	
	11 38	80 56¼	2 15 45	M.			C.	4	
	12 55	81 3¾	2 25 15	Do. rev.			C.	4	
♄ —— 21.	6 17½	84 31¼	1 58 45	G.	28 19	32 20	C.	4	
	7 50¾	83 8¾	2 28 15	Do. rev.			C.	4	
	9 14¾	82 38¾	2 11 45	K. — 1.			C.	4	
	9 58¼	81 58¾	2 27 15	Do. rev.			C.	4	

1776.	Alt. of the ☉'s L. L.	Azimuth of the ☉'s Center observed.	Variation.	Compass used.	Latitude in.	Longitude in.	Observ.	No of Observations	Remarks.
	° ′	° ′	° ′ ″		° ′	° ′			
♄ Sept. 21.	11 43	N 81 36¼ E	1 50 45 E	K. No 2.	28 19 S	32 20 W	C.	4	Fine weather.
	12 51	81 13½	1 32 45	Do. rev.			C.	4	
	13 47½	80 43¾	1 31 14	M.			C.	4	
	14 20½	79 42½	2 13 30	Do. rev.			C.	4	
☉ —— 22.	19 55	82 7½	3 27 50	G.	28 36	31 0	C.	4	
	19 11	81 30	2 22 20	Do. rev.			C.	4	
	18 20	82 51	3 12 15	K. — 1.			C.	4	
	17 55	83 18	3 15 45	Do. rev.			C.	4	
	17 5	82 7½	1 43 10	K. — 2.			C.	4	
	16 40	82 35	1 55 0	Do. rev.			C.	4	
	15 48	83 26	2 12 55	M.			C.	4	
	16 11	83 37	2 4 30	Do. rev.			C.	4	
	10 11	83 10	1 23 20	G.	29 12	30 31	C.	4	
	11 55	82 11	1 20 45	Do. rev.			C.	4	
	13 52	80 59	1 22 15	K. — 1.			C.	4	
	15 14	80 13	1 19 35	Do. rev.			C.	4	
	16 54	79 28	1 2 35	K. — 2.			C.	4	
	19 3	78 15	0 56 0	Do. rev.			C.	4	
	21 11	76 46	1 1 5	M.			C.	4	
	22 24	76 1	0 58 5	Do. rev.			C.	4	
		88 30	1 53 0	K. — 1.	29 12	Amplit.	C.	4	
☽ —— 23.	12 25⅔	85 21⅓	2 1 0	G.	29 29	29 12		4	
	11 19	85 33¾	1 33 5	Do. rev.				4	
	10 11	86 11⅔	1 31 0	K. — 1.			C.	4	
	9 22½	86 58⅓	1 48 40	Do. rev.			C.	4	
	7 14⅔	87 28⅓	1 5 20	K. — 2			C.	4	
	6 45	87 41⅔	1 0 40	Do. rev.			C.	4	
	5 30	88 5	0 40 40	M.			C.	4	
♂ —— 24.	20 23¼	81 1¾	2 37 15	G.	30 25	26 28	C.	4	
	18 44¼	79 20¾	0 4 5 W	Do. rev.			C.	4	
	17 30¾	79 55	0 23 20	K. — 2.			C.	4	
	17 0	81 42½	1 3 50 E	Do. rev.			C.	4	
	16 22	82 20	1 17 0	K. — 1.			C.	4	
	16 0½	80 48¾	0 28 15 W	Do. rev.			C.	4	
	14 58¼	82 53¾	0 57 5	M.			C.	4	
	14 26	83 58¾	1 42 5	Do. rev.			C.	4	
♄ —— 28.	11 4¼	89 36	3 53 0	G.	33 43	16 27	C.	4	
	11 55	88 33	3 26 0	Do. rev.			C.	4	
	13 29¼	86 48	2 46 25	K. — 1.			C.	4	
	14 5¾	86 57	3 20 50	Do. rev.			C.	4	
	15 48	87 6	4 42 0	K. — 2.			C.	4	
	17 57	85 18	4 26 40	M.			C.	4	
	19 5	84 45	4 43 40	Do. rev.			C.	4	
☉ —— 29.	23 14¾	N 72 22 W	4 44 15	G.	33 48	16 30	C.	4	
	20 53	73 56	4 24 0	Do. rev.			C.	4	
	18 11¾	74 53	3 40 45	K. — 1.			C.	4	

1776.	Alt. of the ☉'s L. L.	Azimuth of the ☉'s Center observed.	Variation.	Compass used.	Latitude in.	Longitude in.	Observ.	N° of Observations.	Remarks.
	° ′	° ′	° ′ ″		° ′	° ′			
☉ Sept. 29.	15 57¼	N 78 6 W	3 5 45 W	K. 1. rev.	33 48 S	16 30 W	C.	4	Fine weather.
	13 45	79 58	5 39 45	K. N° 2.			C.	4	
	11 31	79 53	5 34 30	Do. rev.			C.	4	
	10 7¼	81 50	5 7 0	M.			C.	4	
	9 9¾	83 9	5 47 45	Do. rev.			C.	4	
	9 15½	N 92 6 E	4 44 15	G.	33 56	16 14	C.	4	
	9 46½	91 30	4 24 0	Do. rev.			C.	4	
	11 1	89 48¾	3 40 45	K. — 1.			C.	4	
	11 30¼	88 53¾	3 5 45	Do. rev.			C.	4	
	12 46	90 33¾	5 39 45	K. — 2.			C.	4	
	13 43	89 42½	5 34 30	Do. rev.			C.	4	
	15 4¼	88 23	5 7 0	M.			C.	4	
	15 48¾	88 33¾	5 47 45	Do. rev.			C.	4	
♂ Oct. 1.	21 59	N 72 30 W	6 13 0	G.	34 16	12 16	C.	4	
	20 15	73 3¾	7 0 55	Do. rev.			C.	4	
	18 12	74 13¼	7 21 35	K. — 1.			C.	4	
	17 15	74 37	7 41 0	Do. rev.			C.	4	
	14 10	74 42½	6 49 30	K. — 2.			C.	4	
	12 40	78 32½	7 2 50	Do. rev.			C.	4	
	11 30	79 2½	7 21 30	M.			C.	4	
	9 56	80 53¾	6 36 55	Do. rev.			C.	4	
	8 0¾	N 96 10 E	7 7 0	G.	34 12	11 30	C.	4	
	9 13	96 12½	7 38 30	Do. rev.			C.	4	
	11 0	93 27½	6 27 50	K. — 1.			C.	4	
	11 59	92 56¼	6 37 55	Do. rev.			C.	4	
	12 56¼	91 37½	6 0 10	K. — 2.			C.	4	
	14 12	92 48¾	7 57 35	Do. rev.			C.	4	
	14 21½	91 41¼	7 45 30	M.			C.	4	
	16 1½	91 26¼	7 50 15	Do. rev.			C.	4	
♃ — 3.	18 33¼	N 76 15 W	5 53 0	G.	34 43	9 40	C.	4	
	3 52	85 28¾	7 11 0	Do. rev.			C.	4	
	6 13½	N 96 57½ E	5 51 10	G.	35 37	9 30	C.	4	
	9 57¼	94 6¼	5 42 55	Do. rev.			C.	4	
	11 14	93 22½	5 44 30	K. — 1.			C.	4	
	11 55¾	92 22½	5 26 30	Do. rev.			C.	4	
	11 55¼	92 52½	6 38 30	K. — 2.			C.	4	
	13 50¾	92 17½	6 46 10	Do. rev.			C.	4	
	14 58¼	91 10	6 28 0	M.			C.	4	
	15 35¼	90 41¼	6 27 15	Do. rev.			C.	4	
♀ — 4.	21 42¾	N 72 32½ W	7 5 50	G.	35 45½	9 20	C.	4	
	20 28½	74 10	6 29 40	Do. rev.			C.	4	
	19 37½	74 46¼	6 34 5	K. — 1.			C.	4	
	18 52¾	76 8¾	5 46 15	Do. rev.			C.	4	
	18 1¼	75 46¼	6 49 5	K. — 2.			C.	4	
	17 25½	75 36¼	7 23 45	Do. rev.			C.	4	
	16 33¼	75 46¼	7 56 25	M.			C.	4	

1776.	Alt. of the ☉'s L. L.	Azimuth of the ☉'s Center observed.	Variation.	Compass used.	Latitude in.	Longitude in.	Observ.	N° of Observations.	Remarks.
	° ′	° ′	° ′ ″		° ′	° ′			
♀ Oct. 4.	16 7¼	N 77 12 W	6 40 0 W	M. rev.	35 45 S	9 20 W	C.	4	Fine weather.
	7 21½	N 98 0 E	7 16 0	G.	35 49	9 14	C.	4	
	8 44¼	97 2½	7 19 50	Do. rev.			C.	4	
	9 30	96 46¼	7 35 15	K. N° 1.			C.	4	
	10 25½	96 8¾	7 34 5	Do. rev.			C.	4	
	11 38	95 32¼	7 55 55	K. — 2.			C.	4	
	12 20½	95 45	8 40 0	Do. rev.			C.	4	
	12 25¼	93 30	7 12 40	M.			C.	4	
	17 58	90 40	7 49 0	Do. rev.			C.	4	
☽ — 7.	28 23½	N 67 27½ W	8 33 30	G.	35 19	8 0	C.	4	
	27 40	68 5	8 35 0	Do. rev.			C.	4	
	26 34¼	67 2½	10 31 30	K. — 1.			C.	4	
	25 29¾	71 3¾	7 24 15	Do. rev.			C.	4	
	24 26¼	70 37½	8 42 30	K. — 2.			C.	4	
	23 45¼	70 32½	9 19 30	Do. rev.			C.	4	
	22 29½	72 28¾	8 23 15	M.			C.	4	
	21 49¼	72 36¼	8 47 5	Do. rev.			C.	4	
		90 16¼	6 59 15	G.	35 19	Amplit.	C.	4	

No reason can be assigned why N° 1. should differ so much from itself, nor why the amplitude should give the variation so different from the azimuths: I am well assured there was no mistake in the observation; the weather was calm, and the sea smooth. J. C.

	21 17½	N 90 41¼ E	8 43 15 W	G.	35 30 S	7 55 W	C.	4	Fine weather.
	22 31¼	90 25	9 19 0	Do. rev.			C.	4	
	23 27¾	89 26	9 1 40	K. N° 1.			C.	4	
	24 11¾	88 23¾	8 34 25	Do. rev.			C.	4	
	25 14¾	88 17½	9 18 10	K. — 2.			C.	4	
	26 13½	87 26¼	9 14 35	Do. rev.			C.	4	
	27 47¾	86 13¼	9 23 35	M.			C.	4	
	28 22¾	86 22½	10 0 50	Do. rev.			C.	4	
♂ — 8.	26 48¾	69 40¼	8 16 0	G.	35 32	7 25	C.	4	
	25 21	70 7½	8 49 0	Do. rev.			C.	4	
	23 22¼	71 33¾	9 0 0	K. — 1.			C.	4	
	22 33½	71 52½	9 28 0	Do. rev.			C.	4	
	20 55¼	73 18¾	7 9 0	K. — 2			C.	4	
	19 57¼	73 51¼	9 23 0	Do. rev.			C.	4	
	18 59¾	74 57½	9 1 0	M.			C.	4	
	17 14¾	75 48¾	9 27 0	Do. rev.			C.	4	
☿ — 9.	14 43¾	99 32½	10 18 30	G.	35 26	3 24	C.	4	
	16 37	98 32½	10 40 0	Do. rev.			C.	4	
	17 34	97 30	10 2 0	K. — 1.			C.	4	
	18 6¾	96 25	9 41 0	Do. rev.			C.	4	
	19 9	96 48¾	10 50 0	K. — 2.			C.	4	
	19 5¼	96 13¾	10 45 0	Do. rev.			C.	4	

1776.	Alt. of the ☉'s L. L.	Azimuth of the ☉'s Center observed.	Variation.	Compass used.	Latitude in.	Longitude in.	Observ.	N° of Observations.	Remarks.
	° ′	° ′	° ′ ″		° ′	° ′			
☿ Oct. 9.	21 1¼	N 95 41¼ E	11 5 0 W	M.	35 26 S	3 24 W	C.	4	Fine weather.
	21 42¾	95 28¾	11 24 0	Do. rev.			C.	4	
♃ —— 14.	33 50	N 53 33 W	21 47 0	M.	34 57	8 31 E	C.	4	
	32 34	57 57	18 51 0	Do. rev.			C.	4	
	30 48¾	59 21	18 37 0	G.			C.	4	
	27 29¾	61 45	18 55 0	Do. rev.			C.	4	
	25 44	62 50	19 14 0	K. N° 1.			C.	4	
♃ Dec. 5.	45 15¾	S 74 21¼ E	22 12 45	G.	38 52	23 20	C.	4	Fresh gales.
	46 13	73 18¾	24 9 15	Do. rev.			C.	4	
	49 46	74 57½	26 2 30	K. — 1.			C.	4	
	51 1	80 40	21 42 0	Do. rev.			C.	4	
	52 6¾	80 0	23 36 0	K. — 2.			C.	4	A rough sea.
♂ —— 10.	35 10	N 64 22½ E	24 30 30	G.	44 8	32 40	C.	6	
	32 38½	66 29¼	24 50 50	Do. rev.			C.	6	
	31 19¾	68 38	23 56 0	K. — 2.			C.	6	
	30 30¾	67 50	25 30 0	Do. rev.			C.	6	
	29 40½	70 32½	23 35 0	K. — 1.			C.	6	
	28 26	70 30	24 46 0	Do. rev.			C.	6	Fine weather.
	27 36½	70 17½	25 56 0	M.			C.	6	
	26 17¾	72 17½	24 54 0	Do. rev.			C.	6	
♃ —— 12.	42 48	N 55 42¼ W	22 30 50	G.	46 37	37 50	C.	6	
	42 17½	52 47½	26 9 30	Do. rev.			C.	6	
	41 19¾	53 50	26 18 0	K. — 1.			C.	6	
	40 34	55 37½	25 24 30	Do. rev.			C.	6	
	39 24	56 45	25 43 0	K. — 2.			C.	6	
	38 47¾	57 10	26 12 0	Do. rev.			C.	6	
	37 25	57 25	27 19 0	M.			C.	6	
	35 59¾	57 55	28 27 0	Do. rev.			C.	6	
♄ —— 14.	17 11¼	75 5	30 45 0	G.	47 56	44 27	C.	4	
	16 51½	75 45	30 23 0	Do. rev.			C.	4	
	16 23½	75 0	31 40 0	K. — 1.			C.	4	
	16 11	76 3¾	30 48 15	Do. rev.			C.	4	
	15 41¾	75 3¾	32 18 15	K. — 2.			C.	4	
	15 20½	76 15	31 31 0	Do. rev.			C.	4	
	14 46¼	77 26¼	30 59 45	M.			C.	4	
	14 23¼	78 11¼	30 36 45	Do. rev.			C.	4	
♀ —— 27.	25 46	S 55 55 E	27 39 0	K. — 2.	48 41	69 10	C.	4	Do. at the Island of Desolation.
	26 12	56 24	27 40 0	Do. rev.			C.	4	
	26 34	57 12	27 15 0	G.			C.	4	
	26 56¼	57 3¼	28 4 0	Do. rev.			C.	4	
	27 37	57 54	27 40 0	M.			C.	4	
	28 0	57 56	28 5 0	Do. rev.			C.	4	
♂ —— 31.	29 6	57 55	29 45 0	G.	48 41	76 59	C.	4	
1777.	29 49	56 56	31 33 0	Do. rev.			C.	4	
☿ Jan. 1.	8 3	N 87 47 W	30 53 0	K. — 2.	48 31	79 9	C.	2	Blowing weath.
	6 43	87 52	29 26 0	G.			C.	2	Ship great mot.

1777.	Alt. of the ☉'s L. L.	Azimuth of the ☉'s Center observed.	Variation.	Compass used.	Latitude in.	Longitude in.	Observ.	N° of Observations.	Remarks.
	° ′	° ′	° ′ ″		° ′	° ′			
☿ Jan. 1.		S 80 0 W	26 9 0 W	G.	48 30 S	Amplit.	C.	2	Moderate.
♀ —— 3.	47 35¾	N 38 41 W	29 37 0	G.	48 16	85 30 E	C.	4	
	47 0¾	39 3¾	30 8 15	Do. rev.			C.	4	
	46 15¼	38 22½	32 17 30	K. N° 2.			C.	4	
	45 37¾	39 40	31 44 0	Do. rev.			C.	4	
	41 39	47 41¼	29 37 0	M.			C.	4	
	40 51½	48 33½	29 59 7	Do. rev.			C.	4	
☿ —— 8.	12 24½	83 23	25 45 0	G.	47 18	100 16	C.	5	
	11 15¾	84 54	25 30 0	K. — 2.			C.	5	
	10 13¾	86 4	25 30 0	M.			C.	5	
	9 46⅓	86 48⅔	25 10 0	Do. rev.			C.	3	
♃ —— 9.	28 8⅓	67 56⅔	24 7 20	G.	48 13	103 13	C.	6	A rough sea.
♀ —— 10.	14 38¼	83 10¾	23 14 10	G.	48 26	107 0	C.	6	
	13 16	84 16¾	23 38 40	K. — 2.			C.	6	
☽ —— 13.	10 16¾	N 51 3¾ E	18 46 35	K. — 2.	47 29	110 20	C.	4	Fine weather.
	10 49	52 7½	18 16 30	Do. rev.			C.	4	
	11 43¾	53 45	17 40 0	G.			C.	4	
	12 6⅔	53 18⅓	18 30 20	Do. rev.			C.	4	
♂ —— 14.	33 39	N 70 21½ W	14 48 30	G.	46 15	114 50	C.	12	
	32 34	70 30	15 54 20	Do. rev.			C.	12	
	31 34	71 40	15 51 20	K. — 2.			C.	6	
	30 49½	71 7½	17 12 10	Do. rev.			C.	6	
	29 55	70 57½	18 20 30	M.			C.	6	
	29 7½	71 25	18 55 0	Do. rev.			C.	6	
♀ —— 17.	38 3¼	74 57½	6 51 15	G.	44 18	127 48	C.	4	
	36 59½	75 7½	7 52 30	Do. rev.			C.	4	
	35 9	75 29	9 26 45	K. — 2.			C.	6	
	33 9¾	76 56¾	10 2 20	Do. rev.			C.	6	
	31 37½	79 7½	9 23 50	M.			C.	4	
	30 25	81 8¾	8 36 15	Do. rev.			C.	4	
♄ —— 18.	29 39	86 1½	4 7 40	G.	44 18	132 20	C.	6	
	29 1½	85 9½	5 34 10	Do. rev.			C.	6	
	28 7½	86 30	4 16 30	K. — 2.			C.	4	
	28 13½	86 7½	6 20 30	Do. rev.			C.	4	
	26 10½	87 32½	5 56 30	M.			C.	6	
	25 9	86 38½	7 21 0	Do. rev.			C.	6	
♂ —— 21.	33 3¾	84 40	1 15 40 E	K. — 2.	43 27	142 35	C.	4	
	31 44½	87 33¾	1 4 25	Do. rev.			C.	4	
	23 53½	83 45	1 20 40 W	G.			C.	4	
	22 47¾	82 56¼	0 5 25	Do. rev.			C.	4	
	21 15¾	79 52½	2 44 50 E	M.			C.	4	
	20 24¼	79 50	1 58 0	Do. rev.			C.	4	
☿ —— 22.	25 11	85 49¼	3 3 30	M.	43 33	142 51	C.	6	
	23 59	98 28⅓	3 52 0	Do. rev.			C.	10	
	22 49½	98 28½	2 50 20	G.			C.	6	
	22 5	99 19¼	3 1 10	Do. rev.			C.	6	

1777.	Alt. of the ☉'s L. L.	Azimuth of the ☉'s Center observed.	Variation.	Compass used.	Latitude in.	Longitude in.	Observ	No. of Observations.	Remarks.
	° ′ ″	° ′	° ′ ″		° ′	° ′			
☿ Jan. 22.	21 2	N 103 9¼ W	5 52 0 W	K. N° 2.	43 33 S	142 51 E	C.	6	Fine weather.
	20 20¾	103 8⅓	5 13 40	Do. rev.			C.	6	
♃ —— 23.	16 40⅓	S 85 8⅓ E	5 50 20	K. — 2.	43 48	146 56	C.	6	
	17 15⅓	85 47½	5 57 0	Do. rev.			C.	6	
	18 6½	87 0	6 22 20	G.			C.	4	
	18 33¼	87 22½	6 20 20	Do. rev.			C.	4	
	19 19⅓	87 5	5 20 40	M.			C.	3	
	20 3⅔	87 40	5 16 40	Do. rev.			C.	3	
♀ —— 24.	16 5½	S 75 3¾ W	3 51 15	K. — 2.	43 48	148 12	C.	4	
	15 28	75 3¾	3 3 55	Do. rev.			C.	4	
	14 28½	72 7½	5 17 30	G.			C.	4	
	13 9	71 50	4 22 40	Do. rev.			C.	4	
	11 38¾	68 43¾	6 3 15	M.			C.	4	
	11 2	68 33¾	5 37 30	Do. rev.			C.	4	
	5 44	S 79 51¼ E	10 13 30	K. — 2.	43 43	148 20⅓	C.	4	
	6 5	79 44¼	8 41 30	Do. rev.			C.	4	
	8 30	83 3¾	11 7 45	G.			C.	4	
	9 41	82 56¼	10 18 15	Do. rev.			C.	4	
	10 34½	83 58⅓	10 2 20	M.			C.	4	
	11 27	85 9	10 23 10	Do. rev.			C.	4	
♂ —— 28.	36 12	N 73 18¾ E	6 45 15	G.	43 21	147 53	C.	4	In Advent. Bay
	36 35	74 1¼	5 44 45	Do. rev.			C.	4	Vandieman's L.
	37 28	72 48¾	5 58 35	K. — 2.			C.	4	
	38 13	72 10	5 46 40	Do. rev.			C.	4	
	40 17	70 45	5 24 20	M.			C.	4	
	40 41	70 25	5 40 0	Do. rev.			C.	4	
♃ —— 30.	20 35	88 51¼	5 50 0	G.	43 15	148 42	C.	4	
	21 19	88 55	5 3 0	Do. rev.			C.	4	
	22 55	87 12½	5 20 30	K. — 2.			C.	4	
	23 38	86 27½	5 24 30	Do. rev.			C.	4	
	27 14	83 57½	4 30 30	M.			C.	4	
	28 3	82 30	5 12 0	Do. rev.			C.	4	
☉ Feb. 2.	28 24¾	N 85 11¼ W	9 28 45	G.	44 51	155 47	C.	4	
	23 54½	85 58¾	6 56 10	Do. rev.			C.	4	
	25 14¾	84 50	6 4 35	K. — 2.			C.	4	
	25 54½	83 5	6 35 0	Do. rev.			C.	4	
	21 47	80 51¼	7 7 25	M.			C.	4	
	17 37½	74 27½	9 28 30	Do. rev.			C.	4	
♂ —— 4.		S 54 0½ W	12 0 0 E	G.	43 54 S	Amplit.	C.		Fine weather.
	8 13¼	S 88 26¼ E	12 31 55	G.	43 43	161 28	C.	4	
	8 44⅔	88 37½	12 13 30	Do. rev.			C.	4	
	9 44¼	88 48⅓	11 27 0	K. — 2.			C.	6	
	11 7½	90 50¾	9 37 10	M.			C.	6	
☿ —— 5	13 55¼	S 69 12½ W	12 13 30	G.	42 29	164 9	C.	4	
	13 15½	69 38¾	11 11 15	Do. rev.			C.	4	
	12 21¾	68 41¼	11 18 45	K. — 2.			C.	4	

1777.	Alt. of the ☉'s L. L.	Azimuth of the ☉'s Center observed.	Variation.	Compass used.	Latitude in.	Longitude in.	Observ.	No of Observations.	Remarks.
	° ′	° ′	° ′ ″		° ′	° ′			
♃ Feb. 6.	19 50	S 73 7 W	14 26 20 E	G.	43 49 S	165 3 E	C.	4	Fine weather.
	18 40¼	73 6¼	13 23 5	Do. rev.			C.	4	
	17 17	72 33¾	12 40 0	K. No 2.			C.	4	
	17 9	72 42	12 43 40	G.			C.	4	
♀ —— 7.	9 22¼	N 88 32½ E	13 17 30	G.	42 4	167 32	C.	4	
	9 43½	88 30	12 52 0	Do. rev.			C.	4	
	10 35¾	87 7½	13 29 0	K. — 2.			C.	4	
	11 6¼	87 20	12 47 0	Do. rev.			C.	4	
	12 3½	86 40	12 38 0	M.			C.	4	
	12 53½	85 42	13 2 0	Do. rev.			C.	4	
☽ —— 10.	18 32¼	S 73 15 W	13 47 0	G.	40 36	173 34	C.	4	
	17 55¾	72 36¼	14 3 5	Do. rev.			C.	4	
	16 57½	73 0	12 42 12	K. — 2.			C.	4	
	16 18½	72 17½	12 51 50	Do. rev.			C.	4	
	15 3	71 5	13 1 20	M.			C.	4	
	14 23	69 37½	13 50 10	Do. rev.			C.	4	
♃ —— 27.	10 47¼	N 78 16¼ E	12 44 5	G.	41 29	177 14	C.	4	
	11 44¼	76 41¼	13 28 45	Do. rev.			C.	4	
	13 49	75 18¼	13 0 15	K. — 2.			C.	4	
	14 46¾	74 36¼	12 49 45	Do. rev.			C.	4	
	16 19	73 3¾	12 58 45	M.			C.	4	
	17 44¼	71 7½	13 37 30	Do. rev.			C.	4	
☿ March 5.	16 15	82 7½	13 45 0	G.	41 25	171 10	C.	4	
	14 14	80 1¼	11 9 0	K. — 2.			C.	4	
	12 15	86 28⅓	11 59 0	M.			C.	4	
	10 37	79 25	11 42 30	Do. rev.			C.	4	
♀ —— 7.	19 53¾	S 88 36¼ W	11 29 45	G.	39 17	167 28	C.	4	Mod. weather.
	18 42½	88 5	10 59 0	Do. rev.			C.	4	
	15 31¾	84 23¾	11 53 15	K. — 2.			C.	4	
	14 55¼	75 33¾	10 11 35	Do. rev.			C.	4	
	14 4¾	82 56¼	12 6 5	K. — 3.			C.	4	
	13 34½	83 41¼	10 56 5	Do. rev.			C.	4	
	12 39¼	82 40	11 10 20	K. — 4.			C.	4	
	12 2½	82 25	11 2 40	Do. rev.			C.	4	
☽ —— 10.	16 24	S 87 46¼ W	10 56 25	G.	39 24	163 58	C.	4	
	16 2	87 41¼	10 41 45	Do. rev.			C.	4	
	15 28	86 35	18 18 40	K. — 2.			C.	4	
	14 54¼	86 8¾	16 15 35	Do. rev.			C.	4	
	13 29¼	83 26¼	12 55 5	K. — 3.			C.	4	
	12 54	86 41¼	9 0 45	Do. rev.			C.	4	
	12 16¼	85 32½	9 36 50	K. — 4.			C.	4	
	11 49¼	84 16¼	10 29 45	Do. rev.			C.	4	
	11 23½	83 27½	10 56 30	K. — 2.			C.	4	
	10 56¼	84 6¼	9 54 25	Do. rev.			C.	4	
	10 17	82 35	10 54 0	M.			C.	4	
	9 55	81 28⅓	11 47 40	Do. rev.			C.	4	

1777.	Alt. of the ☉'s L. L.	Azimuth of the ☉'s Center Center.	Variation.	Compass used.	Latitude in.	Longitude in.	Observer.	No. of Observations	Remarks.
	° ′	° ′	° ′ ″		° ′	° ′			
☉ Mar. 16.	22 43⅓	N 86 30 W	10 41 20 E	G.	33 36 S	160 38 E	C.	3	Fine weather.
	22 18	86 43⅓	10 36 20	Do. rev.			C.	3	
	21 32⅓	86 36⅔	9 52 40	K. N° 2			C.	3	
	19 51	87 25	9 24 0	Do. rev.			C.	3	
	19 23⅔	87 18⅓	8 56 0	K. — 2.			C.	3	
	18 5	92 5	12 44 40	Do. rev.			C.	3	
	17 38	91 11⅔	11 31 0	K. — 3.			C.	3	
	17 1⅓	89 30	9 22 40	Do. rev.			C.	3	
	16 37	89 55	9 30 20	K. — 4.			C.	3	
	15 47	90 56⅔	9 55 40	Do. rev.			C	3	
	15 16	91 58⅔	10 34 20	M.			C.	3	
	14 34	92 30	10 36 20	Do. rev.			C.	3	
♃ —— 20.	20 11	87 22¼	9 8 0	G. — 1	28 50	158 42	C.	4	Do. and hazy.
	18 57	88 24	9 24 0	G. — 2.			C.	4	
	17 19	88 56¼	8 59 15	K. — 2.			C.	4	The Sun was too faint to be observed with the Compass reversed.
	16 24	91 56¼	11 12 45	K. — 3.			C.	4	
	15 31	91 3¾	9 48 25	K. — 4.			C.	4	
	14 9	91 27¾	9 28 40	M.			C.	4	
♀ —— 21.	4 45	N 77 21¾ E	9 43 0	G.	27 1	158 28	C.	3	Fair weather.
	5 10¾	77 43⅔	9 7 15	Do. rev.			C.	3	
	5 45	77 53⅓	8 9 0	K. — 2.			C.	3	
	6 27	77 20	9 1 40	Do. rev.			C.	3	
	7 26⅔	77 15	8 23 20	K. — 3.			C.	3	
	8 5⅔	76 11⅔	9 7 0	Do. rev.			C.	3	
	9 5½	77 42½	7 3 30	K. — 1.			C.	4	
	9 40	76 50	7 38 0	K. 1. rev.			C.	4	
	10 26⅓	75 10	8 53 40	K. — 4.			C.	4	
	10 51¼	75 26¼	8 23 45	Do. rev.			C.	4	
	11 59⅔	74 14¼	8 57 40	M.			C.	4	
	12 48¼	74 15	8 31 0	Do. rev.	23 46	158 47	C.	4	
♂ —— 25.	13 9	73 43¾	8 16 15	G. — 1.			C.	4	
	13 49	73 28¾	7 47 35	Do. rev.			C.	4	
	15 30	72 3¾	8 22 45	K. — 2.			C.	4	
	16 43½	71 23¾	8 40 55	Do. rev.			C.	4	
	18 49½	70 13¾	8 31 45	M.			C.	4	
	19 32¾	69 30	8 52 20	Do. rev.			C.	2	
♃ —— 27.	9 34	74 18⅔	8 19 15	G. — 1.	22 50	158 58	C.	4	
	10 7	72 56¼	9 26 15	Do. rev.			C.	4	
	11 12	72 0	9 52 40	K. — 2.			C.	4	
	11 38	72 57½	9 3 30	Do. rev.			C.	4	
	12 36	73 0	8 14 20	K. — 2.			C.	4	
	13 1	71 56¼	9 5 20	Do. rev.			C.	4	
	13 49	73 57½	6 42 30	K. — 3.			C.	4	
	14 19	72 33¾	7 53 15	Do. rev.			C.	4	
	14 57	71 30	8 36 40	K. — 4.			C	4	
	15 38	71 38¼	8 11 45	Do. rev			C.	4	

1777.	Alt. of the ☉'s L. L.	Azimuth of the ☉'s Center observed.	Variation.	Compass used.	Latitude in.	Longitude in.	Observ.	N° of Observations.	Remarks.
	° ′	° ′	° ′ ″		° ′	° ′			
♃ Mar. 27.	17 4	N 70 43¾ E	8 22 15 E	M.	22 50 S	158 38 E	C.	4	Fair weather.
	17 35	70 7½	8 44 10	Do. rev.			C.	4	
♂ April 1.	9 39	72 13¾	8 53 55	G. N° 1.	19 57	158 27	C.	4	
	10 5	72 33¾	8 23 35	Do. rev.			C.	4	
	11 33¾	72 2½	8 18 10	K. — 2.			C.	4	
	12 14¾	71 41¼	8 23 45	Do. rev.			C.	4	
	13 0¾	72 3¾	7 42 15	M.			C.	4	
	13 41½	71 6¼	8 23 25	Do. rev.			C.	4	
♂ —— 8.			7 22 0	G.	19 2	160 40	C.	4	Fine weather.
			7 58 0	Do. rev.			C.	4	
			7 36 0	K. — 2.			C.	4	
			7 22 30	Do. rev.			C.	4	
			7 10 45	M.			C.	4	
			7 9 30	Do. rev.			C.	4	
☿ —— 16.			8 46 50	G.	18 6	163 46	C.	4	
			8 56 45	Do. rev.			C.	4	
			8 37 0	K. — 2.			C.	4	
			8 14 15	Do. rev.			C.	4	
			8 24 30	M.			C.	4	
			8 0 25	Do. rev.			C.	4	
			8 18 15	G.	18 4	163 32	C.	4	
			7 20 5	Do. rev.			C.	4	
			7 14 5	K. — 2.			C.	4	
			6 45 35	Do. rev.			C.	4	
			7 39 25	M.			C.	4	
			7 36 50	Do. rev.			C.	4	
♃ —— 24.			12 13 15	G.	19 22	170 42	C.	4	
			10 31 0	Do. rev.			C.	4	
			11 9 0	K. — 2			C.	4	
			9 58 30	Do. rev.			C.	4	
			9 56 0	M.			C.	4	
			9 42 0	Do. rev.			C.	4	

The book in which the Sun's altitudes and azimuths were taken down was stolen by the Indians. J. C.

☉ May 13.	10 2½	N 57 25 E	8 32 0 E	G.	20 15 S	174 45 E	C.	4	Fine weather,
	12 12¼	56 18¼	8 33 55	Do. rev.			C.	4	at anchor at
	14 20½	56 7½	7 36 50	K. — 2.			C.	4	Annamocka.
	15 4	55 26¼	7 55 25	Do. rev.			C.	4	
	16 3¾	55 32½	7 15 50	K. — 3.			C.	4	
	16 43	54 16¼	8 9 25	Do. rev.			C.	4	
	17 38½	54 26½	7 25 45	K. — 4.			C.	4	
	18 6	54 26¼	7 10 1	Do. rev.			C.	4	
	19 6	52 56¼	8 3 45	M.			C.	4	
	19 35	52 30	8 13 0	Do. rev.			C.	4	

1777.	Alt. of the ☉'s L. L.	Azimuth of the ☉'s Center observed.	Variation.	Compass used.	Latitude in.	Longitude in.	Observ.	N° of Observations.	Remarks.
	° ′	° ′	° ′ ″		° ′	° ′			
☉ May 18.	35 8	N 35 21 E	10 40 15 W	G. N° 1.	19 46 S	185 37 E	C.	4	Fair weather.
	36 4	35 33	9 21 30	Do. rev.			C.	4	
	37 2	34 37	9 6 15	K. — 2.			C.	4	
	37 36	34 7	8 46 30	Do. rev.			C.	4	
	38 23	32 21	9 28 45	M.			C.	4	
	39 11	31 55	8 45 0	Do. rev.			C.	4	
♀ —— 23.	19 44½	70 8¾	11 44 45	G. — 1.	19 46	174 21	C.	4	
	19 12½	69 37½	10 53 30	Do. rev.			C.	4	
	18 28	69 57½	10 47 30	K. — 2.			C.	4	
	17 52	69 45	10 13 0	Do. rev.			C.	4	
	16 57	70 27½	10 31 30	M.			C.	4	
	16 23½	70 45	10 19 0	Do. rev.			C.	4	
♃ June 6.	6 54½		9 55 45	G. — 1.	19 55	174 20	C.	4	
	7 55½		9 5 45	Do. rev.			C.	4	
	8 59½		8 35 30	K. — 2.			C.	4	
	9 47¾		8 56 30	Do. rev.			C.	4	
	10 58½		8 59 45	M.			C.	4	
	11 44½		9 10 45	Do. rev.			C.	4	
☿ July 19.	20 25	N 64 12½ W	8 34 30	G. — 1.	22 25	173 34	C.	4	Fine weather.
	19 52½	64 43¾	8 47 45	Do. rev.			C.	4	
	18 39	65 18¾	8 28 45	K. — 2.			C.	4	
	17 39½	66 0	8 28 10	Do. rev.			C.	4	
	16 1	67 27½	8 49 30	M.			C.	4	
	15 9½	68 12½	9 2 30	Do. rev.			C.	4	
♄ —— 26.	10 16		8 1 0	G. — 1.	26 41	166 0	C.	4	
	10 54		6 45 0	Do. rev.			C.	4	
	11 53		8 37 30	K. — 2.			C.	4	
	16 49		8 6 15	Do. rev.			C.	4	
☉ —— 27.	8 45		8 24 45	G.	25 57	165 0	C.	4	
	8 21½		8 13 45	Do. rev.			C.	4	
	7 38½		8 8 15	K. — 1.			C.	4	
	7 12½		8 3 30	Do. rev.			C.	4	
♃ —— 31.	5 53		7 37 0	G.	27 51	159 10	C.	4	
	7 2		7 30 45	Do. rev.			C.	4	
	8 36		6 38 30	K. — 2.			C.	4	
	10 0		7 32 30	Do. rev.			C.	4	
	11 40		8 18 15	M.			C.	4	
	12 43¾		8 47 45	Do. rev.			C.	4	
☉ Aug. 1.	11 39¼	69 53¾	7 41 45	G. — 1.	27 43	157 19	C.	4	
	10 44	69 58¾	7 8 45	Do. rev.			C.	4	
	9 41	69 26¼	5 54 15	K. — 2.			C.	4	
	9 3	71 11¼	7 13 14	Do. rev.			C.	4	
	7 43	71 51¼	6 59 15	M.			C.	4	
	6 23	73 32½	7 48 30	Do. rev.			C.	4	
☿ —— 6.	8 58½	N 58 50 E	7 55 20	G. — 1.	25 17	152 14	C.	4	
	9 31	58 50	7 39 20	Do. rev.			C.	4	

1777.	Alt. of the ☉'s L. L.	Azimuth of the ☉'s Center observed.	Variation.	Compass used.	Latitude in.	Longitude in.	Observ.	N° of Observations.	Remarks.
	° ′	° ′	° ′ ″		° ′	° ′			
☿ Aug. 6.	10 38¾	N 58 3¼ E	7 45 25 E	K. N° 2.	25 17 S	152 14 W	C.	4	Fine weather.
	11 11½	57 20	8 9 0	Do. rev.			C.	4	
	12 20½	57 40	7 6 0	M.			C.	4	
	12 54	57 15	7 9 40	Do. rev.			C.	4	
♃ —— 7.	24 32½	N 63 55 W	7 49 40	G. — 1.	25 0	150 45	C.	4	
	23 16¼	65 2½	7 52 10	Do. rev.			C.	4	
	21 2½	65 37½	6 39 10	K. — 2.			C.	4	
	15 21¼	69 5	6 1 20	Do. rev.			C.	4	
	14 22¼	70 45	7 2 0	M.			C.	4	
	13 42	72 48¾	8 40 5	Do. rev.			C.	4	
☿ Dec. 10.	25 45	S 65 23¾ W	5 42 15	G.	14 17	152 30	C.	4	Moderate and fine weather.
	24 38	65 20	5 38 0	Do. rev.			C.	4	
	21 26	65 22½	5 13 30	K. — 2.			C.	4	
	20 31	65 42½	4 45 30	Do. rev.			C.	4	
	16 57	63 51⅓	6 4 40	M.			C.	4	
	14 50	63 27½	6 8 30	Do. rev.			C.	4	
♃ —— 11.	17 18½	S 74 47 E	5 11 0	G.	13 15	153 24	C.	4	
	17 58	75 26¼	5 44 15	Do. rev.			C.	4	
	19 49	74 38¼	4 42 15	K.			C.	4	
	20 49	75 5¾	5 1 45	Do. rev.			C.	4	
	22 11½	76 0	5 48 0	M.			C.	4	
	22 54½	75 55¾	5 39 45	Do. rev.			C.	4	
☉ —— 14.	19 24	S 62 29 W	6 28 50	G.	10 49	154 2	C.	6	
	18 46	63 3¼	5 52 40	Do. rev.			C.	6	
	17 53	62 30	6 20 0	K. — 2.			C.	6	
	17 20	63 40	5 10 0	Do. rev.			C.	6	
	16 22	62 17⅓	6 26 30	M.			C.	6	
	15 28	63 7⅓	5 32 30	Do. rev.			C.	6	
	9 56¼	S 74 25 E	6 29 40	G	10 9	154 32	C.	6	
	10 23½	74 7½	6 8 50	Do. rev.			C.	6	
	11 39	73 15	5 8 0	K. — 2.			C.	6	
	12 31	73 26	5 13 0	Do. rev.			C.	6	
	13 43	73 6⅔	4 46 40	M.			C.	6	
	14 32	72 31	4 6 30	Do. rev.			C.	6	
♂ —— 16.	9 10½	73 11	5 43 40	G.	8 1	155 25	C.	4	
	9 56	73 7½	5 35 30	Do. rev.			C.	4	
	11 16	71 30	3 50 0	K. — 2.			C.	4	
	12 13	71 56⅔	4 14 45	Do. rev.			C.	4	
	14 6	72 3¼	4 15 20	M.			C.	4	
	15 39	73 35	5 43 0	Do. rev.			C.	4	
☿ —— 17.	18 25	S 62 5 W	5 39 0	G.	7 21	155 39	C.	6	
	17 45	62 29	5 15 0	Do. rev.			C.	6	
	16 53	62 14¼	5 28 0	K. — 2.			C.	6	
	16 23	62 14½	5 0 0	Do. rev.			C.	6	
	15 12	62 51	4 49 5	M.			C.	6	
	14 13	61 43¼	5 54 30	Do. rev.			C.	6	

1777.	Alt. of the ☉'s L. L.	Azimuth of the ☉'s Center observed.	Variation.	Compass used.	Latitude in.	Longitude in.	Observ.	N° of Observations.	Remarks.
	° ′	° ′	° ′ ″		° ′	° ′			
♀ Dec. 19.	14 27½	S 72 10¾ E	5 24 50 E	G.	3 51 S	156 19 W	C.	6	Fine weather.
	15 14⅓	72 46⅔	6 4 40	Do. rev.			C.	6	
	16 6½	71 51⅔	5 11 40	K. N° 2.			C.	6	
	16 54⅔	72 8⅓	5 30 20	Do. rev.			C.	6	
	18 23⅔	71 51⅓	5 19 40	M.			C.	6	
	19 32½	71 48⅓	5 22 20	Do. rev.			C.	6	
♄ —— 20.	20 13	S 60 5¾ W	5 50 10	G.	3 13	156 28	C.	6	
	19 29	60 24¼	5 49 50	Do. rev.			C.	6	
	18 0¾	60 10¾	6 9 10	K. — 2.			C.	6	
	16 54⅓	61 28¼	4 57 40	Do. rev.			C.	6	
	15 19	61 7	5 25 0	M.			C.	6	
	13 16⅔	60 32½	6 5 30	Do. rev.			C.	6	
☽ —— 22.	7 58	S 72 59 E	6 46 10	G.	0 29 N	157 26	C.	6	
	8 37	73 18¼	7 8 20	Do. rev.			C.	6	
	10 20	73 32½	6 31 30	K. — 2.			C.	6	
	10 9	72 26⅔	6 31 20	Do. rev.			C.	6	
	12 29	71 58½	6 10 45	M.			C.	6	
	13 27	72 28¼	6 47 0	Do. rev.			C.	6	
♂ —— 23.	23 10	S 57 39¼ W	6 20 10	G.	1 1	157 29	C.	6	
	22 27	56 59¼	6 59 30	Do. rev.			C.	6	
	21 6½	57 20¾	6 55 10	K. — 2.			C.	6	
	20 9	59 45	4 42 40	Do. rev.			C.	6	
	18 53	58 50	5 52 40	M.			C.	6	
	16 59	57 52	7 11 20	Do. rev.			C.	6	
♄ —— 27.	9 20½	S 73 33⅓ E	7 32 40	G. — 1.	1 55½	157 34	C.	3	
	9 40	73 8⅓	7 11 20	Do. rev.			C.	3	
	11 28	72 20	6 26 0	K. — 2.			C.	3	
	15 23	71 40	6 27 20	Do. rev.			C.	3	
	16 24	71 20	6 21 40	M.			C.	3	
	16 57	72 21⅔	7 29 40	Do. rev.			C.	3	
	32 25	S 54 52 W	5 44 40	G. — 1.	1 58	157 31	C.	3	
	32 3	55 8⅓	5 36 20	Do. rev.			C.	3	
	31 15	55 46⅔	5 17 0	K. — 2.			C.	3	
	30 54	56 13⅓	4 58 0	Do. rev.			C.	3	
	30 3	54 56⅔	6 29 0	M.			C.	3	
	29 46	55 16⅔	6 18 40	Do. rev.			C.	3	
1778. ☽ Jan. 5.	8 0½	S 72 36 E	6 22 0	G. — 1.	5 35	157 0	C.	6	
	8 51	73 12½	6 8 30	Do. rev.			C.	6	
	10 7	71 38⅓	5 48 20	K. — 2.			C.	6	
	10 59	71 7	5 24 40	Do. rev.			C.	6	
	12 14½	71 37½	6 11 30	M.			C.	6	
	13 8	70 57	5 45 0	Do. rev.			C.	6	
☿ —— 7.	8 11	73 6⅔	7 4 40	G.	7 40	155 10	C.	6	
	8 58	72 29¼	6 39 10	Do. rev.			C.	6	
	10 21	72 10¾	6 38 50	K. — 2.			C.	6	
	11 7	72 15	6 53 0	Do. rev.			C.	6	

1778.	Alt. of the ☉'s L. L.	Azimuth of the ☉'s Center observed.	Variation.	Compass used.	Latitude in.	Longitude in.	Observ.	N° of Observations.	Remarks.
	° ′	° ′	° ′ ″		° ′	° ′			
☿ Jan. 7.	12 15	S 71 54¾ E	6 50 10 E	M.	7 40 N	155 10 W	C.	6	Fine weather.
	18 44	69 45¾	6 31 50	Do. rev.			C.	6	
♃ —— 8.	18 15	S 56 34¼ W	6 49 50	G.	7 48	154 56	C.	6	
	17 40	55 40¾	7 55 10	Do. rev.			C.	6	
	16 45	57 17½	6 34 30	K. N° 2.			C.	6	
	15 49	57 9¼	6 58 50	Do. rev.			C.	6	
	14 45	58 5	6 33 0	M.			C.	6	
	13 45	58 50	5 54 0	Do. rev.			C.	6	
☉ —— 11.	6 42	S 73 22 E	7 18 13	G.	12 0	155 39	C.	6	
	7 22	72 10⅔	6 18 50	Do. rev.			C.	6	
	8 29	71 56⅔	6 24 40	K. — 2.			C.	6	
	9 10	72 16	6 56 0	Do. rev.			C.	6	
	10 35	72 19	7 27 0	M.			C.	6	
	11 23	71 44	7 36 0	Do. rev.			C.	6	
☽ —— 12.	11 20	S 57 32½ W	6 53 30	G.	13 55	156 54	C.	6	
	10 50	57 30	7 3 0	Do. rev.			C.	6	
	9 39	59 3⅓	5 56 40	K. — 2.			C.	6	
	8 37	59 25	5 55 0	Do. rev.			C.	6	
♃ —— 15.	17 46	S 51 10 W	8 33 40	G.	18 1	158 45	C.	6	
	16 41	51 33⅓	8 47 30	Do. rev.			C.	6	
	15 10	52 10	9 0 0	K. — 2.			C.	6	
	12 53	53 25	8 54 20	Do. rev.			C.	6	
	11 12	52 57	10 10 20	M.			C.	6	
	10 12½	53 5⅓	10 29 10	Do. rev.			C.	6	
	8 17	S 72 52½ E	8 28 30	G.	18 38	158 49	C.	6	
	9 5	72 55	8 55 0	Do. rev.			C.	6	
	10 20	72 52	9 26 0	K. — 2.			C.	6	
	11 5	72 2½	8 56 30	Do. rev.			C.	6	
	12 50	72 13⅓	9 59 20	M.			C.	6	
	13 58	72 15	10 37 0	Do. rev.			C.	6	
♄ —— 17.	5 12	75 42½	10 10 30	G.	21 8	159 11	C.	6	
	5 42¾	75 27½	10 9 50	Do. rev.			C.	6	
	6 44½	73 48¾	9 1 5	K. — 2.			C.	6	
	7 17½	74 3¾	9 39 5	Do. rev.			C.	6	
	8 14¼	74 30	10 27 40	M.			C.	6	
	8 54	73 23⅓	9 41 40	Do. rev.			C.	6	
☽ —— 19.	17 19¾	S 48 38⅓ W	10 11 40	K. — 2.	21 57	159 32	C.	6	
	16 49⅔	49 13⅓	9 52 40	Do. rev.			C.	6	Fine weather at the Island of Atowi.
	15 48	48 35	11 9 0	G.			C.	6	
	15 17	48 40	11 16 0	Do. rev.			C.	6	
♀ —— 23.	11 24	55 3⅓	8 20 40	G.	21 56	159 48	C.	4	
	9 9⅓	55 53¼	8 28 30	K. — 2.			C.	4	
	8 25	56 49	8 11 0	Do. rev.			C.	4	
	7 31	53 52	11 35 40	M.			C.	4	
♂ —— 27.	4 57	S 76 47 E	8 39 30	G.	21 22	159 56	C.	6	
	5 44	77 9¼	9 23 10	Do. rev.			C.	6	

1778.	Alt. of the ☉'s L. L.	Azimuth of the ☉'s Center observed.	Variation.	Compass used.	Latitude in.	Longitude in.	Observ.	N° of Observations.	Remarks.
	° ′	° ′	° ′ ″		° ′	° ′			
♂ Jan. 27.	7 6	S 75 55¾ E	8 49 50 E	K. N° 2.	21 22 N	159 56 W	C.	6	Fine weather at the island of Atowi.
	7 59	75 55	9 13 0	Do. rev.			C.	6	
	9 18	76 16	10 16 0	M.			C.	6	
	10 33	75 44	10 20 10	Do. rev.			C.	6	
☿ —— 28.	17 5	S 50 37 W	11 4 20	G.	21 36	160 3	C.	6	
	16 31	50 24¼	11 38 10	Do. rev.			C.	6	
	15 33	51 58⅓	10 40 0	K. — 2.			C.	6	
	14 52	52 21⅓	10 40 0	Do. rev.			C.	6	
	13 33	52 40	11 8 20	M.			C.	6	At Neehow.
	12 49	52 5¾	12 6 10	Do. rev.			C.	6	
♂ Feb. 3.	4 46	S 81 10¾ E	11 30 50	G.	24 13	160 10	C.	6	
	5 26	80 40¾	11 20 50	Do. rev.			C.	6	
	6 35	79 2½	10 18 30	K. — 2.			C.	6	
	7 32	79 36⅔	11 24 40	Do. rev.			C.	6	
	8 41	79 11⅔	11 35 40	M.			C.	6	
	9 41	77 14¼	10 14 10	Do. rev.			C.	6	
☽ —— 4.	13 34	S 52 15¾ W	12 17 30	G.	24 50	160 23	C.	6	
	13 0	52 5	12 49 40	Do. rev.			C.	6	
	11 49⅔	52 22½	13 15 10	K. — 2.			C.	6	
	10 58	53 44¼	12 24 30	Do. rev.			C.	6	
	9 59½	54 54¼	11 49 50	M.			C.	6	
	9 14	53 35¾	13 34 30	Do. rev.			C.	6	
♀ —— 6.	13 54	S 76 0 E	13 40 0	G.	28 39	159 51	C.	6	
	14 42	74 57½	12 13 10	Do. rev.			C.	6	
	15 41	73 28⅓	11 29 40	K.			C.	6	
	16 30	73 11⅔	11 50 20	Do. rev.			C.	6	
	17 10	72 37	11 47 0	M.			C.	6	
	18 4	72 7¼	12 1 45	Do. rev.			C.	6	
☉ —— 8.	20 1	71 46¾	14 13 50	G.	30 55½	157 53	C.	6	
	20 31	70 33⅓	13 29 0	Do. rev.			C.	6	
	21 15	69 45	13 25 20	K. — 2.			C.	6	
	21 57	69 6⅔	13 28 40	Do. rev.			C.	6	
	22 48	69 26⅔	14 39 40	M.			C.	4	
	23 26	68 33⅓	14 25 40	Do. rev.			C.	4	
☽ —— 9.	15 21	S 47 36¼ W	14 36 45	G.	31 4	157 35	C.	4	
	15 4	47 26¼	14 32 5	Do. rev.			C.	4	
	14 33	48 33¾	13 48 55	K. — 2.			C.	4	
	13 55	49 32½	13 22 10	Do. rev.			C.	4	
	12 54	50 12½	13 30 30	M.			C.	4	
	12 11	49 32½	14 43 10	Do. rev.			C.	4	
♄ —— 14.	18 5	50 31¼	10 41 45	G.	31 39	153 57	C.	4	
	17 43	50 15	11 17 20	Do. rev.			C.	4	
	17 13	50 55	11 3 20	K. — 2.			C.	4	
	16 50	51 55	10 22 0	Do. rev.			C.	4	
	16 12	51 32½	11 16 50	M.			C.	4	
	15 37	51 38¾	11 41 50	Do. rev.			C.	4	

1778.	Alt. of the ☉'s L. L.	Azimuth of the ☉'s Center observed.	Variation.	Compass used.	Latitude in.	Longitude in.	Observ.	No of Observations.	Remarks.
	° ′	° ′	° ′ ″		° ′	° ′			
♂ Feb. 17.	9 59	S 81 28¾ E	11 2 46 E	G.	36 10 N	153 15 W	C.	4	Fine weather.
	10 4	80 0	12 43 20	K. N° 2.			C.	6	
	11 13	80 0¾	13 42 40	M.			C.	2	
	11 48	79 30	16 42 30	Do. rev.					
☿ —— 18.	11 40	82 52	16 48 40	G.	37 15	153 45	C.	4	
	12 7	82 6½	16 56 40	Do. rev.			C.	3	
	12 59	80 51⅓	16 10 40	K. — 2.			C.	6	
	14 18	80 13¾	17 4 40	Do. rev.			C.	4	
	15 58	78 22	16 59 20	M.			C.	5	
♃ —— 19.	11 37	48 35¾	17 6 50	G.	37 30	153 40	C	6	A rough sea.
	10 31	49 50	16 53 40	K.			C.	3	
	6 50	54 24	15 38 20	Do. rev.			C.	5	
♀ —— 20.	18 25	S 41 36¼ W	17 2 45	G.	38 16	152 0	C.	4	
	18 0	41 52½	17 15 30	Do. rev.			C.	4	
	17 25	42 37½	17 8 10	K. — 2.			C.	4	
	16 13½	44 42½	16 20 50	Do. rev.			C.	4	
	15 29	45 18¼	16 31 15	M.			C.	4	
	14 53	44 32½	17 56 50	Do. rev.			C.	4	
♄ —— 21.	6 29	S 88 11¼ E	17 37 15	G.	39 14	148 6	C.	4	Moderate.
	6 48½	87 5	16 47 40	Do. rev.			C.	4	
	7 28	86 53¾	17 17 45	K. — 2.			C.	4	
	8 17	85 43¾	16 51 45	Do. rev.			C.	4	
	8 58	86 46¼	18 34 35	M.			C.	4	
	9 26¾	86 11	18 29 0	Do. rev.			C.	4	
☉ —— 22.	15 49¾	S 42 2½ W	18 53 50	G.	40 25	147 30	C.	4	
	15 23	41 56¼	19 29 5	Do. rev.			C.	4	
	14 58	42 43¾	19 10 35	K. — 2.			C.	4	
	14 3	44 35	18 21 0	Do. rev.			C.	4	
♄ —— 28	26 17¾	S 65 43¾ E	20 31 25	G. — 1.	44 46	131 50	C.	4	
	26 42¼	65 2½	20 36 30	Do. rev.			C.	4	
	27 40½	63 18¾	20 48 45	K. — 2.			C.	4	
	28 12½	61 41¼	20 17 55	Do. rev.			C.	4	
	28 58	59 52½	20 17 50	M.			C.	4	
	29 28	57 48¾	19 12 7	Do. rev.			C.	4	
☉ March 1.	13 15¾	S 44 48¾ W	19 48 55	G. — 1.	44 52	131 42	C.	4	
	12 52	45 41½	19 19 10	Do. rev.			C.	4	
	0 16¾	47 22½	18 31 30	K. — 2.			C.	4	
	11 50⅓	48 41⅓	17 38 20	Do. rev.			C.	4	
♃ —— 19.	21 6¾	48 2	17 58 10	G.	45 5	125 45	C.	4	
	20 41	48 41¼	17 54 45	Do. rev.			C.	4	Blowing weath. and a great sea.
	19 30½	50 40	17 22 40	K. — 2.			C.	4	
	18 25¼	51 11⅓	18 11 20	M.			C.	4	
☉ —— 22.	19 31	51 27½	16 34 30	G.	47 36	124 25	C.	6	
	18 14	52 47½	16 41 30	Do. rev.			C.	6	
♀ —— 27.	11 27	61 5	19 39 0	G.	48 15	127 30	C.	6	
	10 5	63 5	19 15 0	Do. rev.			C.	6	

1778.	Alt. of the ☉'s L. L.	Azimuth of the ☉'s Center observed.	Variation.	Compass used.	Latitude in.	Longitude in.	Observ.	No of Observations.	Remarks.
	° ′	° ′	° ′ ″		° ′	° ′			
♃ April 30	24 52⅔	S 60 12 W	20 32 0 E	G.	53 37 N	134 53 W	C.	10	A rough sea.
	23 56	62 2½	21 52 0	Do. rev.			C.	2	
♀ May 1.	21 14½	61 21⅔	23 29 30	G.	55 12	135 0	C.	4	
	20 39	61 50	24 52 0	Do. rev.			C.	4	
	17 45⅔	65 39¼	24 12 50	K. N° 2.			C.	4	
	15 59⅓	68 53¼	24 52 40	Do. rev.			C.	4	
	14 29¼	73 43¾	22 20 50	M.			C.	4	
	13 17¼	72 11¼	25 8 45	Do. rev.			C.	4	
☉ —— 3.	7 44¾	N 47 50 E	24 40 20	G.	58 14	139 19	C.	4	Moderate weath
	8 12¼	48 33⅓	24 42 40	Do. rev.			C.	4	
	9 8⅓	51 21⅔	23 27 40	K. — 2.			C.	4	
	9 44¼	51 18½	24 29 10	Do. rev.			C.	4	
	10 50¼	53 17½	24 17 50	M.			C.	4	
	11 18⅔	54 50¾	23 31 10	Do. rev.			C.	4	
☽ —— 4.	17 43¼	S 65 39¼ W	25 55 10	G.	58 35	139 8	C.	4	
	17 7¾	66 44¼	25 38 30	Do. rev.			C.	4	
	16 27¼	67 13¼	26 25 0	K. — 2.			C.	4	
	15 58½	68 38	25 54 40	Do. rev.			C.	4	
	15 6	69 15½	26 34 10	M.			C.	4	
	14 35¾	69 58⅔	26 40 40	Do. rev.			C.	4	
♂ —— 5.	9 56	N 51 33¾ E	23 14 45	G.	58 53	139 16	C.	4	
	10 16	52 38¾	22 43 45	Do. rev.			C.	4	
	10 58¼	53 58¾	22 23 55	K. — 2.			C.	4	
	11 19¾	54 12¼	24 55 40	Do. rev.			C.	4	
	12 6½	55 53¾	22 32 15	M.			C.	4	
	12 22	55 52½	23 9 10	Do. rev.			C.	4	
☿ —— 6.	14 11¾	S 73 32 W	24 50 20	K. — 2.	59 9	139 53	C.	4	
	13 46	75 10	23 55 20	Do. rev.			C.	4	
	13 8	75 55	24 13 20	G. — 1.			C.	4	
	12 47⅔	75 52	24 49 30	Do. rev.			C.	4	
	12 10½	77 15	24 29 40	M.			C.	4	
	11 45⅓	78 8	24 79 0	Do. rev.			C.	4	
♀ —— 8.	11 22½	N 52 57½ E	22 34 30	K. — 2.	59 26	132 39	C.	4	Fine weather.
	11 49⅔	53 1⅔	22 55 8	Do. rev.			C.	4	
	12 26⅔	53 39¼	22 27 10	G.			C.	4	
	12 47¾	54 26⅔	22 25 50	Do. rev.			C.	4	
	13 11¾	54 46⅔	22 15 45	M.			C.	4	
	13 31	54 34¼	22 4 10	Do. rev.			C.	4	
☿ —— 20.	13 4	49 40¾	22 54 50	K. — 2.	59 39	149 8	C.	4	
	13 51	50 10	23 46 40	Do. rev.			C.	4	
	14 21	50 35	24 2 42	G.			C.	4	
	14 38	51 5	24 11 40	Do. rev.			C.	4	
	15 26	52 50	23 48 20	M.			C.	4	
	15 46	53 42½	23 25 10	Do. rev.			C.	4	
♃ —— 21.	17 1¾	S 75 47½ W	25 3 50	G.	59 22	150 8	C.	4	
	16 47	76 9	25 6 0	Do. rev.			C.	4	

1778.	Alt. of the ☉'s L. L.	Azimuth of the ☉'s Center observed.	Variation.	Compass used.	Latitude in.	Longitude in.	Observ.	No. of Observations	Remarks.
	° ′	° ′	° ′ ″		° ′	° ′			
♄ May 21.	16 23½	S 77 31¼ W	24 22 45 E	K. N° 2.	59 22 N	150 8 W	C.	4	Fine weather.
	16 11	78 12½	23 57 50	Do. rev.			C.	4	
	15 44	78 23¾	24 36 55	M.			C.	4	
	15 25¼	78 52½	24 39 30	Do. rev.			C.	4	
☉ —— 24.	8 27	N 86 41½ E	22 49 15	K. — 2.	58 16	151 48	C.	4	A tumbling sea.
♀ June 12.	21 11½	59 52½	20 40 30	K. — 2.	56 20	154 0	C.	4	
	22 10	60 40½	20 21 50	Do. rev.			C.	4	
♂ —— 16.	25 31¾	66 56¼	18 44 5	K. — 2.	55 37	158 21	C.	4	Fine weather.
	26 18¾	67 33¾	19 13 35	Do. rev.			C.	4	
	27 0¾	65 [illegible]2½	22 6 30	G. — 1.			C.	4	
	27 29¾	67 23¾	21 42 15	Do. rev.			C.	4	
	28 27	69 35	20 18 0	M.			C.	4	
	28 51¾	70 7¾	20 22 30	Do. rev.			C.	4	
	29 23¾	71 0	20 16 40	K. — 1.			C.	4	
☿ —— 17.	17 51¾	S 83 37½ W	21 37 30	K. — 2.	55 25	159 22	C.	4	
	17 29¾	83 39½	22 7 50	Do. rev.			C.	4	
	16 58¾	84 5	22 24 40	G.			C.	4	
	16 7¾	84 43¾	22 59 15	Do. rev.			C.	4	
	15 40¾	85 26¼	22 46 5	M.			C.	4	
	15 28¾	85 23¼	23 19 0	Do. rev.			C.	4	
♂ July 7.	11 19	87 33¾	26 36 55	K.	57 7	159 48	C.	4	
	11 2¾	89 11¼	25 26 45	Do. rev.			C.	4	
	10 35¾	89 17½	26 2 10	G.			C.	4	
	10 21¾	89 20	26 29 40	Do. rev.			C.	4	
	9 52¾	N 89 10 W	26 22 40	M.			C.	4	
	9 37¾	89 26¾	26 23 45	Do. rev.			C.	4	
♃ —— 9.	15 53¾	S 84 26¼ W	22 20 45	K. — 2	55 18	158 23	C.	4	
	15 29¼	84 32½	22 53 50	Do. rev.			C.	4	
	14 59¼	85 27½	22 47 30	G.			C.	4	
	14 44½	85 44	22 45 0	Do. rev.			C.	4	
	14 16¼	86 30	22 55 0	M.			C.	4	
	14 2	86 38¾	23 9 15	Do. rev.			C.	4	
☉ —— 12.	17 7½	82 53¾	21 14 15	K. — 2.	58 31	159 57	C.	4	
	16 35¼	83 1¾	21 58 45	Do. rev.			C.	4	
	16 1¾	83 28¾	22 25 35	G. — 1.			C.	4	
	15 40¾	83 25	23 4 15	Do. rev.			C.	4	
	15 13	83 51¼	23 22 45	M.			C.	4	
	14 54	84 36¼	23 8 45	Do. rev.			C.	4	
☽ —— 13.	21 7¾	S 63 33¾ E	19 2 15	K. — 2.	58 8	161 26	C.	4	
	21 32¾	62 37½	20 37 50	Do. rev.			C.	4	
	22 1½	62 47½	21 13 30	G.			C.	4	
	22 34¾	63 25	21 28 20	Do. rev.			C.	4	
	22 54¾	64 17½	21 7 50	M.			C.	4	
	23 13¼	65 28¾	20 25 35	Do. rev.			C.	4	
☉ —— 19.	24 11	N 66 35 E	23 32 20	G.	59 37	162 37	C.	3	
	24 26	67 11½	23 22 20	Do. rev.			C.	3	

1778.	Alt. of the ☉'s L. L.	Azimuth of the ☉'s Center observed.	Variation.	Compass used.	Latitude in.	Longitude in.	Observ.	N° of Observations.	Remarks.
	° ′	° ′	° ′ ″		° ′	° ′			
☉ July 19.	24 44⅔	N 68 18⅓ E	22 47 40 E	K. N° 2.	59 37 N	162 37 W	C.	3	Fine weather.
	25 1	67 21¾	24 12 20	Do. rev.			C.	3	
	25 34⅔	70 6¾	22 25 20	M.			C.	3	
	25 50⅓	67 56¾	25 7 40	Do. rev.			C.	3	
☽ —— 20.	17 46	S 78 15 W	22 23 20	G. — 1.	59 37	162 33	C.	4	
	17 31⅓	78 48⅓	22 13 0	Do. rev.			C.	4	
	17 10⅔	78 45	22 47 40	K. — 2.			C.	4	
	16 51⅔	80 16⅔	24 12 20	Do. rev.			C.	4	
	16 32	80 33⅓	22 9 0	M.			C.	4	
	16 20	80 16⅔	22 46 40	Do. rev.			C.	4	
☽ —— 27.	13 44	N 58 17½ E	17 30 10	K. — 2.	59 39	169 38	C.	6	
	14 23	58 24	18 31 40	Do. rev.			C.	6	
	15 22	59 52½	18 34 20	G.			C.	4	
	15 49	60 23¾	18 56 25	Do. rev.			C.	4	
	16 35	61 0	19 37 10	M.			C.	4	
	16 57	62 21¼	18 52 35	Do. rev.			C.	4	
☽ Aug. 10.	10 48¾	S 75 41¼ W	27 58 45	K. — 2.	65 43	170 34	C.	4	
	10 24½	77 32½	27 0 50	Do. rev.			C.	4	
	10 4	77 48¾	27 31 55	G.			C.	4	
	9 50½	78 12½	27 39 10	Do. rev.			C.	4	
	9 35¼	79 52½	26 33 50	M.			C.	4	
	9 14½	79 43¾	27 30 15	Do. rev.			C.	4	
♃ —— 13.	14 50½	S 65 31¼ W	27 50 5	K. — 2.	66 36	167 55	C.	4	
	14 39	66 25	26 37 40	Do. rev.			C.	4	
	14 24⅔	66 25	27 11 40	G.			C.	4	
	14 13⅓	67 35	16 27 20	Do. rev.			C.	4	
	13 41	68 1¼	27 16 5	M.			C.	4	
	13 28	67 56⅔	27 50 0	Do. rev.			C.	4	
♀ —— 20.	16 42¾	S 48 35 W	31 0 0	K. — 2.	69 38	164 11	C.	4	
	16 29	49 45	30 28 0	Do. rev.			C.	4	
	16 6¾	50 10	31 4 40	G.			C.	4	
	15 55¼	50 26¼	31 20 40	Do. rev.			C.	4	
	15 34¼	51 7½	31 37 0	M.			C.	4	
	15 20¼	52 34¼	30 48 40	Do. rev.			C.	4	
		N 26 30 E		K. — 2	69 30	Amplit.	C.	4	
♃ —— 27.	12 31	70 5	25 29 0	K. — 2.	69 20	177 0	C.	4	A rough sea.
	15 49	78 20	26 23 0	Do. rev.			C.	4	
♂ Sept. 1.	22 53	S 80 17½ E	27 32 10	K. — 2.	66 47	170 25	C.	6	
	23 49⅓	77 52½	28 15 10	Do. rev.			C	6	
♀ —— 4.	13 3½	S 55 3¾ W	23 55 15	K.	64 26½	171 24	C.	4	Fine weather.
	12 29½	55 17½	24 54 50	Do. rev.			C.	4	
	12 6¼	55 24¾	25 38 55	G.			C.	4	
	11 29½	56 45	25 37 0	M.			C.	4	
☉ —— 6.	9 33½	58 40	26 25 45	G.	63 58	165 48	C.	4	
	9 12¾	60 41¼	26 32 20	Do. rev.			C.	4	
	8 39¾	61 33¾	26 58 50	K.			C.	4	

1778.	Alt. of the ☉'s L.L.	Azimuth of the ☉'s Center observed.	Variation.	Compass used.	Latitude in.	Longitude in.	Observer.	No. of Observations.	Remarks.
	° ′	° ′	° ′ ″		° ′	° ′			
☉ Sept. 6.	8 21	S 61 30 W	26 42 50 E	K. rev.	63 58 N	165 48 W	C.	4	Fine weather.
	7 44	61 32¾	27 29 20	M.			C.	4	
	7 26	62 10	27 6 0	Do. rev.			C.	4	
	16 15	N 84 0 E	26 3 20	K.	64 13	165 20	C.	4	
	16 21	84 5	24 50 45	Do. rev.			C.	4	
	16 46½	84 37½	25 6 55	G.			C.	4	
	17 7	85 42½	25 58 0	Do. rev.			C.	4	
	17 34	86 0	26 42 58	M.			C.	4	
	17 46½	86 54	27 5 20	Do. rev.			C.	4	
♀ —— 11.	5 48	S 63 41¾	24 3 45	K.	64 20	160 53	C.	4	
	5 36	64 56¾	23 15 5	Do. rev.			C.	4	
	5 12½	65 3¾	23 57 45	G.			C.	4	
	5 2½	65 32½	23 46 20	Do. rev.			C.	4	
♂ —— 15.	3 0⅔	S 63 41⅔ W	27 4 50	K.	64 20	163 10	C.	4	
	2 47⅔	64 25	26 50 0	Do. rev.			C.	4	
	2 20	64 45⅓	27 23 40	G.			C.	4	
	2 11⅔	65 18⅓	27 28 40	Do. rev.			C.	4	
	1 54⅓	64 55	28 18 40	M.			C.	4	
	1 45	65 3⅓	28 31 0	Do. rev.			C.	4	
	6 37½	N 66 32½ E	31 50 30	K.	64 20	163 53	C.	4	
	6 56	68 18¾	30 47 5	Do. rev.			C.	4	
	7 18½	68 50	31 24 0	G.			C.	4	
	7 33¼	69 21¾	31 4 45	Do. rev.			C.	4	
	8 0¾	70 15	31 10 20	M.			C.	4	
	8 11½	71 7½	30 55 10	Do. rev.			C.	2	
♃ —— 19.	6 6½	77 56	22 26 0	K. — 2.	63 49	166 37	C.	4	
	6 43	79 4	22 20 0	Do. rev.			C.	4	
☉ Nov. 8.	14 58½	S 35 42 W	16 3 40	G.	40 29	158 36	C.	4	
	14 32½	36 3¾	16 14 40	Do. rev.			C.	4	
	13 45	37 37½	15 41 10	K. — 2.			C.	4	
	13 17¼	38 25	15 29 40	Do. rev.			C.	4	
	12 48¼	37 55	16 33 40	M.			C.	4	
	12 25	38 50	16 6 40	Do. rev.			C.	4	
☉ —— 14.	10 40	71 0⅓	12 23 10	K. — 2.	21 16	155 40	C.	4	
	11 1	71 23⅓	13 0 20	Do. rev.			C.		
	11 46	71 18⅓	13 37 40	G.			C.		
	12 16	71 5	12 52 0	Do. rev.			C.		
	13 0⅔	71 40	13 30 20	M.			C.		
	13 22¼	69 11½	13 0 20	Do. rev.			C.		
☽ —— 15.		S 79 30 E	11 53 0		22 55	Amplit.	C.	4	
♂ —— 16.		S 55 30 W	12 0 0	K. — 2.		Amplit.	C.	4	
☉ —— 29.	10 58	S 70 7½ E	8 44 10	K. — 2.	21 16	155 40	C.	4	Blowing weath.
	11 42	70 16¼	9 18 35	Do. rev.			C.	4	
	12 56	70 16¼	10 0 55	G.			C.	4	
	13 37½	70 0	10 7 40	Do. rev.			C.	4	
	15 11	68 7½	9 12 10	M.			C.	4	

1778.	Alt. of the ☉'s L. L.	Azimuth of the ☉'s Center observed.	Variation.	Compass used.	Latitude in.	Longitude in.	Observ.	Nº of Observations.	Remarks.
	° ′	° ′	° ′ ″		° ′	° ′			
☉ Nov. 29.	15 59	S 66 30 E	8 4 40 E	M. rev.	21 16 N	155 40 W	C.	4	Blowing weath.
☉ Dec. 27.	9 45¾	S 53 2½ W	7 49 10	G.	19 15	155 9	C.	4	
	9 4½	53 41¼	7 31 5	Do. rev.			C.	4	
	8 13½	54 18¾	7 16 15	K. Nº 2.			C.	4	
	7 27¾	54 38¾	7 20 15	Do. rev.			C.	4	
	6 34½	55 22½	7 1 10	M.			C.	4	
1779.	5 59¼	55 8¾	7 31 15	Do. rev.			C.	4	
♀ Jan. 1.	8 21½	S 67 25 E	5 31 20	K. — 2.	19 26	155 7	C.	4	
	8 50¼	68 30	6 50 10	Do. rev.			C.	4	
	9 56¾	67 43¾	6 37 10	G.			C.	4	
	10 35¼	68 3¾	7 17 5	Do. rev.			C.	4	
	11 20½	68 12½	7 49 15	M.			C.	4	
	11 55	67 41¼	7 36 15	Do. rev.			C.	4	
♀ March 5.	27 21	S 59 56 W	10 14 0	K. — 2.	21 57	159 59	C.	4	Ship steady.
	26 29	60 0	10 42 0	Do. rev.			C.	4	
	24 45	61 27	10 15 0	G.			C.	4	
	23 42	61 54	10 26 0	Do. rev.			C.	4	
	22 3	62 30	10 40 0	M.			C.	4	
	21 5	63 14	10 32 0	Do. rev.			C.	4	
♀ —— 12.	18 59	66 1	12 7 0	G.	21 49½	160 32	C.	4	
	18 13	66 37	10 54 0	Do. rev.			C.	4	
	16 53	67 56	11 10 0	K. — 1.			C.	4	
	16 13	68 2	11 24 0	Do. rev.			C.	4	
	10 49	71 2	10 50 0	M.			C.	4	
	10 3	71 11	10 59 0	Do. rev.			C.	4	
☿ —— 17.	17 52	N 88 10 E	10 24 0	G.	21 13	163 18	C.	4	
	19 45	88 56	9 20 0	Do. rev.			C.	4	
	21 30	89 43	9 45 0	K. — 2.			C.	4	
	22 52	89 26	10 16 0	Do. rev.			C.	4	
	24 13	88 48	10 20 0	M.			C.	4	
	25 23	88 11	10 17 0	Do. rev.			C.	4	
♃ —— 18.	24 47½	S 68 17 W	10 19 0	G.	21 12	164 52	C.	4	
	23 14	69 40	9 26 0	Do. rev.			C.	4	
	21 59	70 51	8 53 0	K. — 2.			C.	4	
	21 31	70 22	9 32 0	Do. rev.			C.	4	
	20 26	71 50	8 36 0	M.			C.	4	
	29 46¾	72 32	8 12 0	Do. rev.			C.	4	
♄ —— 20.	26 19	N 89 51 E	10 59 0	G.	20 41	167 12	C.	4	
	27 52	S 89 16 E	10 52 0	Do. rev.			C.	4	
	29 36	88 13	10 41 0	K. — 2.			C.	4	
	30 47	87 49	10 53 0	Do. rev.			C.	4	
	31 57	87 23	11 15 0	M.			C.	4	
	32 55	87 8	11 22 0	Do. rev.			C.	4	
☉ —— 21.	19 35	S 71 6 W	11 20 0	G.	20 34	168 2	C.	4	
	18 20	72 4	10 54 0	Do. rev.			C.	4	
	16 44	71 55	11 43 0	K. — 2.			C.	4	

1779.	Alt. of the ☉'s L. L.	Azimuth of the ☉'s Center observed.	Variation.	Compass used.	Latitude in.	Longitude in.	Observ.	No. of Observations.	Remarks.
	° ′	° ′	° ′ ″		° ′	° ′			
☉ Mar. 21.	15 39	S 72 52 W	11 12 0 E	K. 2. rev.	20 34 N	168 2 W	C.	4	Fine weather.
	14 34	73 0	11 32 0	M.			C.	4	
	13 40	73 7	11 54 30	Do. rev.			C.	4	
♂ —— 23.	19 7	N 84 22¼ E	11 37 30	G.	19 57	174 4	C.	4	
	20 52	84 8⅓	12 32 0	Do. rev.			C.	4	
	22 35	85 15	11 9 0	K. No 2.			C.	4	
	23 22	85 55	11 47 0	Do. rev.			C.	4	
	25 20	86 37¾	11 57 0	M.			C.	4	
	26 11	86 55	12 1 0	Do. rev.			C.	4	
☿ —— 24.	16 58	S 73 41 W	11 23 0	G.	19 57	174 15	C.	4	
	15 32	74 47	10 51 0	Do. rev.			C.	4	
	13 37	75 36	10 46 0	K. — 2.			C.	4	
	12 39	75 25	11 17 0	Do. rev.			C.	4	
	11 24	75 37½	11 32 30	M.			C.	4	
	10 14	76 2½	11 35 30	Do. rev.			C.	4	
♀ —— 26.	17 28	N 81 10 E	12 44 0	G.	19 49	177 11	C.	4	
	18 22	81 41	12 33 0	Do. rev.			C.	4	
	20 5	82 2	12 52 0	K. — 2.			C.	4	
	22 0	83 17½	12 22 30	Do. rev.			C.	4	
	24 17	84 42½	12 25 30	M.			C.	4	
	25 39¾	84 16	12 56 0	Do. rev.			C.	4	
♄ —— 27.	16 54½	S 74 30 W	11 54 0	G.	19 51	177 39	C.	4	
	15 53	75 15	11 45 0	Do. rev.			C.	4	
	14 19	75 35	11 51 0	K. — 2.			C.	4	
	13 21	76 49	10 59 0	Do. rev.			C.	4	
	12 0	76 41	11 37 0	M.			C.	4	
	10 32	77 17	11 33 0	Do. rev.			C.	4	
♃ April 1.	25 25	N 84 30 E	11 9 20	G.	22 23	179 31 E	C.	8	
	27 36	85 7	11 33 40	Do. rev.			C.	5	
☿ —— 7.	10 30	78 45	9 16 40	G.	30 30	168 16	C.	4	
	11 29	79 44	8 52 0	Do. rev.			C.	4	
	14 19	82 13	8 3 20	K. — 2.			C.	4	
	15 46	82 3	9 5 0	Do. rev.			C.	4	
	17 15	82 32	9 22 0	M.			C.	4	
	19 54	84 36	9 2 0	Do. rev.			C.	4	
♃ —— 15.	38 5	S 72 46 E	6 29 0	M.	42 10	160 16	K	8	
	39 28	70 15	6 51 0	Do. rev.			K.	8	
	40 53	67 52½	6 36 30	G.			K	4	
	42 31	64 26¼	5 42 15	K. — 2.			K	4	
♄ —— 17.	29 27	S 67 24 W	7 46 0	G.	43 43	160 4	K.	6	A rough sea.
	47 35	71 57	5 17 0	K. — 2.			K.	6	
☉ —— 18.	37 24½	S 66 41 E	6 29 0	G.	48 20	161 21	K.	6	
	38 16	66 22¼	8 10 30	Do. rev.			K.	6	
	39 12½	64 11	7 43 0	K. — 2.			K.	6	
♂ —— 20.	22 59¾	S 70 44 W	9 22 0	G.	49 54	161 2	K.	4	More moderate.
	22 20	71 41	9 10 0	Do. rev.			K.	4	

1779.	Alt. of the ☉'s L. L.	Azimuth of the ☉'s Center Center.	Variation.	Compass used.	Latitude in.	Longitude in.	Observ.	No. of Observations.	Remarks.
	° ′	° ′	° ′ ″		° ′	° ′			
♂ April 20.	21 33	S 72 1 W	9 41 0 E	K. N° 2	49 54 N	161 2 E	K.	4	More moderate
	20 49	73 22½	9 26 0	Do. rev.			K.	4	
	19 59	73 26	10 24 0	M.			K.	4	
	19 30	74 10	10 18 0	Do. rev.			K.	4	
♀ —— 30.	17 52	84 33	6 9 0	G.	52 58	158 50	K.	4	Fine weather.
	17 28	85 5	6 7 0	Do. rev.			K.	4	
	16 58	86 0	5 52 0	K. — 2.			K	4	In the entrance of Awatchaia Bay.
	16 36	87 10	4 14 0	Do. rev.			K.	4	
	16 6	86 59	6 3 0	M.			K.	4	
	15 51	86 55	6 27 0	Do. rev.			K.	4	
☽ May 3.	12 28	N 87 10 W	6 28 0	G.	52 57	158 50	K.	4	
	12 7	86 15	6 1 0	Do. rev.			K.	4	
	11 31	85 6	5 50 0	M.			K.	4	
	11 9	85 37¾	6 39 0	Do. rev.			K.	4	
	10 31	84 15	6 7 0	K. — 2.			K.	4	
	10 12	83 9	5 27 0	Do. rev.			K	4	
♀ June 18.	18 31	80 25	4 43 0	K. — 2.	52 43	158 59	K.	4	Fine weather.
	17 31	79 37½	5 11 30	Do. rev.			K.	4	
	15 29	81 32¾	9 42 30	G.			K.	4	
	14 59	80 51	9 41 0	Do. rev.			K.	4	
	13 45	78 52½	9 2 30	M.			K.	4	
	13 27	78 44	9 36 0	Do. rev.			K.	4	
	23 16	N 72 56 E	8 46 0	K. — 2.			K.	4	
	23 45	73 37½	8 40 30	Do. rev.			K.	4	
	24 48	74 30	9 6 0	G.			K.	4	
	25 18	75 21	8 53 0	Do. rev.			K.	4	
	25 54½	76 1¼	8 59 0	M.			K.	4	
	26 18	75 57½	9 33 0	Do. rev.			K.	4	
☉ —— 20.	34 45	S 73 5 W	9 1 0	K. — 2.	55 13	163 6	K.	4	
	34 16	72 35	9 15 0	Do. rev.			K.	4	
	33 32	73 34	9 24 0	G.			K	4	
	33 8	73 59	9 35 0	Do. rev.			K.	4	
	31 46	75 2	10 36 0	M.			K.	4	
	31 17	75 39	10 43 0	Do. rev.			K.	4	
☽ —— 21.	18 38	N 85 23½ W	9 37 0	K. — 2.	56 1	164 12	K.	4	
	18 1	84 4	9 56 0	Do. rev.			K.	4	
	17 2	83 34	10 8 0	G.			K.	4	
	16 29	82 34	9 58 0	Do. rev.			K.	4	
	15 58	81 13	9 21 0	M.			K.	4	
	15 16	81 14	10 12 0	Do. rev.			K.	6	
☿ —— 23.	32 39	N 84 49 E	13 17 0	K. — 2.	58 6	167 0	K	6	
	33 24	87 21	12 5 0	Do. rev.			K.	4	
	34 58	88 34	13 38 0	G.			K.	4	
	35 33	89 29	13 49 0	Do. rev.			K	4	
	37 11	S 85 50 E	12 12 0	M.			K	4	
	37 52	85 42	13 18 0	Do. rev.			K.	4	

1779.	Alt. of the ☉'s L. L.	Azimuth of the ☉'s Center observed.	Variation.	Compass used.	Latitude in.	Longitude in.	Observ.	No of Observations.	Remarks.
	° ′	° ′	° ′ ″		° ′	° ′			
♃ June 24.	18 33	N 87 44 W	12 12 0 E	K. No 2.	58 37 N	168 10 E	K.	4	Fine weather.
	18 9	88 26	13 32 0	Do. rev.			K.	4	
	17 19	86 54	13 22 0	G.			K.	4	
	16 37	86 4	13 40 0	Do. rev.			K.	4	
	15 30	83 47½	13 13 0	M.			K.	4	
	15 5	83 16	13 3 0	Do. rev.			K.	4	
☽ —— 28.	26 17	S 70 15 W	20 5 30	K. — 2.	62 10	176 56	K.	4	
	25 53	71 20	19 55 40	Do. rev.			K.	4	
	25 4¼	73 0	19 37 40	G.			K.	4	
	24 25¼	73 2¼	20 48 0	Do. rev.			K.	4	
	23 43¾	75 4¼	20 30 55	M.			K.	4	
	23 8¼	75 41¼	21 32 55	Do. rev.			K.	4	
♂ July 9.	25 16	61 39	25 39 0	K. — 2.	69 5	171 42 W	K.	6	
	24 6	58 35	30 47 40	Do. rev.			K.	6	
	22 35	62 17¾	31 2 15	M.			K.	6	
	21 34	65 53¾	28 17 55	Do. rev.			K.	6	
	21 7	66 30	30 37 40	K. — 2.			K.	6	
	20 29	68 27¾	30 20 55	Do. rev.			K.	6	
☉ —— 11.	28 37¾	49 44	27 42 0	G.	68 6	170 15	K.	4	
	28 17	50 37½	27 46 30	Do. rev.			K.	4	
	27 46½	52 34	27 8 0	K. — 2.			K.	4	
	27 27½	53 46¼	26 50 0	Do. rev.			K.	4	
	27 0	53 49	27 53 0	M.			K.	4	
	26 40	54 37	27 55 0	Do. rev.			K.	4	
☽ —— 12.	25 10½	N 69 19 E	25 33 0	K. — 2.	69 2	169 40	K.	4	
	25 24	69 45	25 45 0	Do. rev.			K.	4	
	25 56	70 22	26 34 0	G.			K.	4	
	26 14	71 30	26 14 0	Do. rev.			K.	4	
	26 39	72 15	26 35 0	M.			K.	4	
	26 58	73 22	26 22 0	Do. rev.			K.	4	
♄ —— 17.	29 2	S 35 39 W	35 39 0	K.	70 4	164 9	K.	4	
	28 48	36 22	35 40 0	Do. rev.			K.	4	
☉	28 24	37 12	36 10 0	G.			K.	4	
	27 39	39 15	36 19 0	M.			K.	4	
	23 46½	N 63 26¼ W	30 21 45	K. — 2.	70 17½	163 24	K.	4	
	24 3⅓	63 11⅔	31 28 20	Do. rev.			K.	4	
	24 30⅓	63 57¼	31 56 30	G.			K.	4	
	24 54	65 31¼	31 32 45	M.			K.	4	
☽ —— 19.	24 5	S 55 5 W	29 29 0	K. — 4.	70 5	163 30	K.	4	
	23 42	56 45	28 57 0	Do. rev.			K.	4	
	23 17	57 29	29 19 0	G.			K.	4	
	22 41	60 17	28 11 0	M.			K.	4	
♄ —— 24.	20 22	70 45	21 37 0	K. — 2.	68 43	171 58	K.	4	Mod. weather.
	20 3½	71 31¼	21 37 25	Do. rev.			K.	4	
	19 34½	73 3¾	21 18 55	G.			K.	4	
	19 18	73 26¼	21 38 45	Do. rev.			K.	4	

1779.	Alt. of the ☉'s L. L.	Azimuth of the ☉'s Center observed.	Variation.	Compass used.	Latitude in.	Longitude in.	Observ.	N° of Observations.	Remarks.
	° ′	° ′	° ′ ″		° ′	° ′			
♄ July 24.	18 45	S 74 1¼ W	22 27 45 E	M.	68 43 N	171 58 W	K.	4	Mod. weather.
	18 31	74 56¼	22 7 25	Do. rev.			K.	4	
♄ —— 31.	25 21½	55 53¾	22 46 35	K. — 2.	64 56	170 42	K.	4	
	24 58	57 11¼	22 22 45	Do. rev.			K.	4	
	24 18	57 30	23 34 0	G.			K.	4	
	22 13¾	60 21¼	22 56 45	Do. rev.			K.	4	
	23 16	61 45	23 0 5	M.			K	4	
	22 49¾	61 45	22 34 20	Do. rev.			K.	4	
♀ Aug. 1.	14 49¼	80 48¾	20 2 15	K. — 2.	64 12	170 22	K.	4	
	14 32¼	82 37½	19 42 10	Do. rev.			K.	4	
	14 4	82 40	19 14 40	G.			K.	4	
	13 46	82 56¼	20 59 5	Do. rev.			K.	4	
	12 53	85 37½	19 8 10	M.			K.	4	
	12 33	85 52½	19 34 50	Do. rev.			K.	4	
☽ —— 2.	19 35	66 37½	23 47 0	K. — 2.	64 5	169 43	K.	4	
	19 17	68 16	22 44 0	Do. rev.			K.	4	
	18 37	68 0	24 22 0	G.			K.	4	
	18 6½	67 44	25 40 0	Do. rev.			K.	4	
	17 15	69 11	25 59 0	M.			K.	4	
	16 53	70 4	25 50 0	Do. rev.			K.	4	
♀ —— 6.	18 16	N 70 8 E	18 20 0	K. — 2	59 47	175 37	K.	4	
	18 28	70 33	18 15 0	Do. rev.			K.	4	
	19 18	72 32	17 42 0	G.			K.	4	
	19 35	73 0	17 42 0	Do. rev.			K.	4	
	25 9	82 30	18 6 0	M.			K.	4	
	25 32	83 38	17 40 0	Do. rev.			K.	4	
♄ —— 7.	21 1	S 67 11 W	19 31 0	K. N° 2.	59 27	175 23	K.	4	
	20 25	67 54	19 50 0	Do. rev.			K.	4	
	19 37	70 5	19 1 0	G.			K.	4	
	19 4	71 9	18 55 0	Do. rev.			K.	4	
	18 9	73 42	17 56 0	M.			K.	4	
	17 36	74 29	18 5 0	Do. rev.			K.	4	
♂ —— 10.	24 21	N 88 52½ W	11 0 0	K. — 2.	57 33	175 52 E	K.	4	○
	25 22	89 24	12 8 0	G.			K.	4	
♃ —— 12.	19 1	S 77 50 W	10 42 0	K. — 2.	56 12	175 0	K.	4	A rough sea.
	17 42	78 49	11 43 0	G.			K.	4	
	16 44	80 50	11 8 0	M.			K	4	
♂ —— 17.	19 58	S 75 30 W	9 47 0	K. — 2.	53 42	168 4	K.	4	Moderate.
	19 5	76 41	9 51 0	G.			K.	4	
	18 1	77 46	10 30 0	Do. rev.			K.	4	
	16 42	80 25	9 34 0	M.			K.	4	
♄ —— 21.	18 22	N 87 26 E	7 13 0	G.	53 14	161 50	K.	6	
	19 17	89 0	6 52 0	Do. rev.			K.	6	
	20 35	S 87 26 E	5 8 0	K. N° 2.			K	6	
	23 16	85 23	6 53 0	Do. rev.			K.	6	
	24 56	84 53	5 53 0	M.			K.	6	

1779.	Alt. of the ☉'s L. L.	Azimuth of the ☉'s Center observed.	Variation.	Compass used.	Latitude in.	Longitude in.	Observ.	No. of Observations.	Remarks.
	° ′	° ′	° ′ ″		° ′	° ′			
♄ Aug. 21.	25 25	S 81 4 E	5 48 0 E	M. rev.	53 14 N	161 50 E	K.	6	Moderate.
♂ Oct. 12.	12 5	S 55 0 W	6 40 0	K. N° 2.	50 57	157 20	K.	6	
	11 34	56 5	6 21 0	Do. rev.			K.	6	
	11 4	56 30	6 42 0	K. — 1.			K.	6	
	10 28	58 37	5 41 0	Do. rev.			K.	6	
	10 3	59 30	5 22 0	M.			K.	6	
	9 46	59 45	5 33 0	Do. rev.			K.	6	
	13 44	S 66 0 E	6 14 0	K. — 2.	50 3	157 2	K.	6	
	14 7	64 45	5 35 0	Do. rev.			K.	4	
	14 44	64 8	5 54 0	K. — 1.			K.	4	
	15 6	63 15	5 35 0	Do. rev.			K.	4	
	15 30	62 8	5 6 0	M.			K.	4	
	15 48	61 59	5 20 0	Do. rev.			K.	4	
♃ — 14.	9 17	S 72 53 E	6 7 0	K. — 1.	46 48	156 30	K.	4	
	10 6	72 10	6 15 0	M.			K.	4	
	10 53	70 30	5 26 0	Do. rev.			K.	4	
♀ — 15.	12 53	S 58 0 W	4 36 0	K. — 1.	46 16	155 30	K.	4	
	12 27	58 52	4 20 0	Do. rev.			K.	4	
	11 9	59 52	5 0 0	M.			K.	4	
	10 20	61 22	4 44 0	Do. rev.			K.	4	
	6 21	S 76 56 E	6 20 0	M.	45 29	154 45	K.	4	
	6 47	75 19	5 1 0	Do. rev.			K.	4	
	7 58	73 7¾	4 21 0	K. — 1.			K.	4	
	8 45¾	75 26	5 0 0	Do. rev.			K.	4	
	9 42	72 37	5 51 0	K. — 2.			K.	4	
	10 8½	72 11	5 55 0	Do. rev.			K.	4	
☉ — 17.	6 51¼	73 50	4 18 0	M.	44 29	153 20	K.	4	
	7 37¼	73 0	5 10 0	Do. rev.			K.	4	
	8 43¼	72 19	4 51 0	M.			K.	4	
	9 8½	71 19	4 37 0	Do. rev.			K.	4	
	10 36	69 7	3 53 0	K. — 1.			K.	4	
	11 2½	70 56	6 18 0	Do. rev.			K.	4	
	11 43	69 0	5 12 0	K. — 2.			K.	4	
	12 1½	68 33	5 7 0	Do. rev.			K.	4	
♃ — 21.	7 7	71 30	3 4 0	M.	41 11	148 50	K.	4	
	8 38½	71 22	4 12 0	Do. rev.			K.	4	
	10 44	67 52	3 4 0	K. — 2.			K.	4	
	11 12½	67 22	3 6 0	Do. rev.			K.	4	
♀ — 22.	11 43	66 28	4 15 0	K. — 1.	40 29	148 9	K.	4	
	12 23½	65 20	2 16 0	Do. rev.			K.	4	
	13 27⅓	64 5	2 11 0	M.			K.	4	
	14 9¼	62 20	1 30 0	Do. rev.			K.	4	
	15 15	61 30	1 38 0	K. — 2.			K.	4	
	15 28	63 15	3 35 0	Do. rev.			K.	4	
☽ — 26.	10 44½	65 30	2 15 0	K. — 2	39 28	142 48	K.	4	A great sea.
	11 33⅓	63 55	1 21 0	Do. rev.			K.	4	

1779.	Alt. of the ☉'s L. L.	Azimuth of the ☉'s Center observed.	Variation.	Compass used.	Latitude in.	Longitude in.	Observ.	No of Observations.	Remarks.
	° ′	° ′	° ′ ″		° ′	° ′			
♄ Oct. 30.	11 2	S 61 7 W	2 29 0 E	K. N° 1.	36 32 N	141 50 E	K.	4	A great sea.
	10 8¼	61 56	2 18 0	K. — 2.			K.	4	
☉ —— 31.	15 52	S 59 49 E	1 7 0	K. — 1.	35 24	142 0	K.	4	
	16 29	60 19	2 17 0	Do. rev.			K.	4	
	17 14½	58 52	1 36 0	K. — 1.			K.	4	
	17 37½	59 15	1 21 0	Do. rev.			K.	4	
	18 13	58 7	2 3 0	K. — 2.			K.	4	
	18 34	57 15	1 29 0	Do. rev.			K.	4	
	19 20	55 52	0 48 0	M.			K.	4	
♀ Nov. 5.	15 37	S 53 7 W	4 13 0	K. — 2.	35 3	143 50	K.	4	
	15 23¾	53 52	3 38 0	Do. rev.			K.	4	
	14 45¾	55 11	2 55 0	K. — 3.			K.	4	
	14 12¾	55 3	3 35 0	Do. rev.			K.	4	
	13 33	54 45	4 32 0	K. — 1.			K.	4	
	13 15½	56 11	3 23 0	Do. rev.			K.	4	
	12 34½	56 41	3 29 0	M.			K.	4	
	12 13¾	56 52½	3 40 0	Do. rev.	26 17	144 11	K.	4	
♄ —— 12.	10 2⅔	S 68 15 E	4 12 0	K. — 2.			K.	6	
	10 46¾	66 50	3 16 20	Do. rev.			K.	6	
☉ —— 13.	9 31½	68 0	3 12 0	M.	24 42	143 7	K.	4	Ship steady.
	10 35	66 45	2 29 0	Do. rev.			K.	4	
	11 57¾	66 15	2 26 40	K. — 2.			K.	4	Fine weather.
	12 44¼	65 45	2 36 0	Do. rev.			K.	4	
	14 7	64 30	2 31 0	K. — 1.			K.	4	
	15 10¼	64 22½	3 9 50	M.			K.	4	
	15 49½	63 22½	3 36 20	Do. rev.			K.	4	
♀ —— 19.	17 6¼	60 15	0 39 0 E	M.	22 14	131 6	K.	6	
	18 7	59 15	0 24 40	Do. rev.			K.	6	
	21 45⅓	57 10	1 0 40	K. — 1.			K.	6	
	23 52¾	56 35	2 43 40 W	Do. rev.			K.	6	
☉ —— 21.	20 26¼	S 57 0 W	0 14 40	M.	21 18	128 46	K.	4	
	19 33	56 50	1 15 40	Do. rev.			K.	4	
	18 25¾	59 52½	0 59 50	K. — 2.			K.	4	
	17 46¼	59 45	0 29 0	Do. rev.			K.	4	
	17 3	60 15	0 33 20	K. — 1.			K.	4	
	15 44	61 22½	0 54 50	Do. rev.			K.	4	
1780.	15 21¾	60 15	0 32 40	K. 1. rev.			K.	4	
☉ Jan. 16.	17 46	S 29 30 E	4 11 20	K. — 2.	15 1	113 45	K.	4	
	17 55	29 15	0 52 0	Do. rev.			K.	4	
	18 10	28 30	0 0 0	M.			K.	4	
	18 43	29 30	0 34 40	Do. rev.			K.	4	
☉ —— 30.	29 13	66 45	0 50 40	K. — 1.	3 21	105 3	K.	4	
	31 10	68 30	0 53 0	Do. rev.			K.	4	
	31 10	66 37	0 11 40	M.			K	4	
	31 34	66 45	0 4 20	Do. rev.			K.	4	
☽ Feb. 1.	17 46	S 71 1 W	0 32 40 E	K. — 1.	1 4	105 33	K.	4	

1780.	Alt. of the ☉'s L. L.	Azimuth of the ☉'s Center observed.	Variation.	Compass used.	Latitude in.	Longitude in.	Observ.	N° of Observations.	Remarks.
	° ′	° ′	° ′ ″		° ′	° ′			
☽ Feb. 1.	17 2	S 70 0 W	1 39 20 E	M. rev.	1 4 N	105 33 E	K.	4	Fine weather.
	16 2	71 22	0 34 25	K. N° 4.			K.	4	
	15 28	71 8	0 42 20	Do. rev.			K.	4	
	14 36	71 30	0 25 40	M.			K.	4	
	14 16	72 15	0 16 40 W	Do. rev.			K.	4	
☉ —— 16.	14 25	S 12 26 E	1 31 20	K. — 1.	6 36 S	105 11	K.	4	
	15 52	12 42	1 52 40	Do. rev.			K.	4	
	18 8	78 17	1 2 0	M.			K.	4	
	19 18	78 52	0 31 0	Do. rev.			K.	4	
♄ —— 29.	27 14	87 45	2 26 0	K. — 1.	15 58	95 0	K	4	
	28 13	88 7	2 21 40	Do. rev.			K.	4	
	29 51	88 52	2 6 40	K. — 4.			K.	4	
	30 35	88 26	2 46 0	Do. rev.			K.	4	
	31 29	87 52	3 36 40	M.			K.	4	
	32 8	88 15	3 26 0	Do. rev.			K.	4	
♃ March 3.	29 37	89 30	3 51 0	K. — 4.	18 25	84 14	K.	4	
	30 26	N 89 37 E	3 16 0	Do. rev.			K.	4	
	31 24	85 45	2 45 40	K. — 1.			K.	4	
	32 17	88 15	2 35 40	Do. rev.			K.	4	
	33 21	88 37	3 22 0	M.			K.	4	
	33 43	88 22	3 15 40	Do. rev.			K.	4	
☽ —— 12.	27 10	89 15	7 38 0	K. — 1.	21 10	68 20	K.	4	
	28 5	89 37	8 26 20	Do. rev.			K.	4	
	29 23	89 52	9 19 0	K. — 4.			K.	4	
	29 55	89 22	9 5 0	Do. rev.			K.	4	
	30 53	89 37	9 49 0	M.			K.	4	
	31 20	89 0	9 26 0	Do. rev.			K.	4	
♃ —— 18.	26 7	S 84 0 E	19 29 20	K. — 1	25 9	58 40	K.	4	
	26 44	85 45	18 [illegible]8 20	Do. rev.			K.	4	
	27 30	84 45	19 36 20	K. — 4.			K.	4	
	28 6	85 22	19 [illegible]2 20	Do. rev.			K.	4	
	29 20	87 15	18 17 40	M.			K.	4	
	29 45	86 45	19 4 0	Do. rev.			K.	4	
♀ —— 24.	20 13	79 30	25 17 0	K. — 4.	29 40	43 30	B.	4	
	20 41	79 30	25 35 40	Do. rev.			B.	4	
	21 28	73 30	25 39 0	K. — 1.			B.	4	
	21 56	75 30	30 28 40	Do. rev.			B.	4	
	22 33	85 0	31 24 40	K. — 2.			B.	4	
	23 13	79 15	27 38 40	Do. rev.			B.	4	
	23 53	81 7	26 16 0	M.			B.	4	
	24 18	81 7	26 34 0	Do. rev.			B.	4	
♃ —— 30.	20 0	83 0	25 34 20	K. — 4.	31 12	32 0	B.	4	
	20 27	83 15	25 40 0	Do. rev.			B.	4	
	21 41	83 45	27 8 0	K. — 4.			B.	4	
	22 6	84 0	26 14 0	Do. rev.			B.	4	
	22 44	83 30	27 12 40	M.			B.	4	

1780.	Alt. of the ☉'s L. L.	Azimuth of the ☉'s Center observed.	Variation.	Compass used.	Latitude in.	Longitude in.	Observ.	N° of Observations.	Remarks.
	° ′	° ′	° ′ ″		° ′	° ′			
♃ Mar. 30.	23 15	S 83 52 E	27 16 0 W	M. rev.	31 12 S	32 0 E	B.	4	Fine weather.
♄ May 19.	15 44	N 75 22 E	17 13 0	K. N° 4.	24 40	0 24 W	B.	4	
	16 35	72 15	14 35 0	Do. rev.			B.	4	
	17 39	71 7	14 12 20	K. — 1.			B.	4	
	18 9	70 22	13 49 0	Do. rev.			B.	4	
	19 26	70 7	14 30 0	M.			B.	4	
	19 56	69 30	14 26 0	Do. rev.			B.	4	
☉ —— 28.	20 2	71 15	11 22 0	K. — 1.	14 24	14 4	B.	4	
	20 56	71 22	11 57 20	Do. rev.			B.	4	
	22 10	71 37	12 52 0	K. — 4.			B.	4	
	22 29	70 15	12 1 0	Do. rev.			B.	4	
	23 31	69 7	11 8 20	M.			B.	4	
☿ —— 31.	18 1	70 7	8 32 10	K. — 1.	12 0	15 52	B.	4	
	18 29	71 37½	10 13 30	Do. rev.			B.	4	
	19 4	71 52½	10 43 50	K. — 4.			B.	4	
	19 25	71 15	10 15 20	Do. rev.			B.	4	
♃ June 5.	19 56	73 45	6 47 0	K. — 1.	5 10 N	25 40	K.	4	
	20 41	76 30	9 35 0	Do. rev.			K.	4	
	21 34	75 30	8 39 0	K. — 4.			K.	4	
	22 3	74 30	7 41 0	Do. rev.			K.	4	
	23 4	74 30	7 46 0	M.			K.	4	
	23 34	74 15	7 23 0	Do. rev.			K.	4	
♃ July 6.	25 49	85 0	9 11 30	K. — 4.	27 48	41 0	K.	4	
	26 25	86 0	9 45 45	Do. rev.			K.	4	
	27 4	88 30	10 49 55	K. — 1.			K.	4	
	27 33	88 0	10 57 56	Do. rev.			K.	4	
	28 46	88 30	10 35 30	M.			K.	4	
	29 19	87 30	9 10 0	Do. rev.			K.	4	
♀ —— 21.	13 15¼	S 87 52½ E	17 33 0	M.	38 10	37 2	K.	4	
	13 42	84 45	20 20 30	Do. rev.			K.	4	
	14 26	87 45	17 48 0	K. — 1.			K.	4	
	14 55	84 52½	19 17 45	Do. rev.			K.	4	
	15 37	84 45	18 55 0	K. — 4.			K.	4	
	16 25½	84 30	18 33 0	Do. rev.			K.	4	
☽ Aug. 2.	23 13	70 22	21 26 30	M.	44 50	23 30	K.	4	
	23 34	69 7	22 20 30	Do. rev.			K.	4	
	24 12	69 15	21 36 45	K. — 4.			K.	4	
	24 34½	69 0	21 30 0	Do. rev.			K.	4	

DIPS OF THE MAGNETIC NEEDLE,

WITH THE

LATITUDE AND LONGITUDE

OF THE

PLACE OF OBSERVATION.

OBSERVED BY

CAPTAIN COOKE AND LIEUTENANT KING,

On Board His MAJESTY'S SLOOP RESOLUTION,

DURING HER LATE VOYAGE

IN THE YEARS 1776, 77, 78, 79, 80.

Plate I.

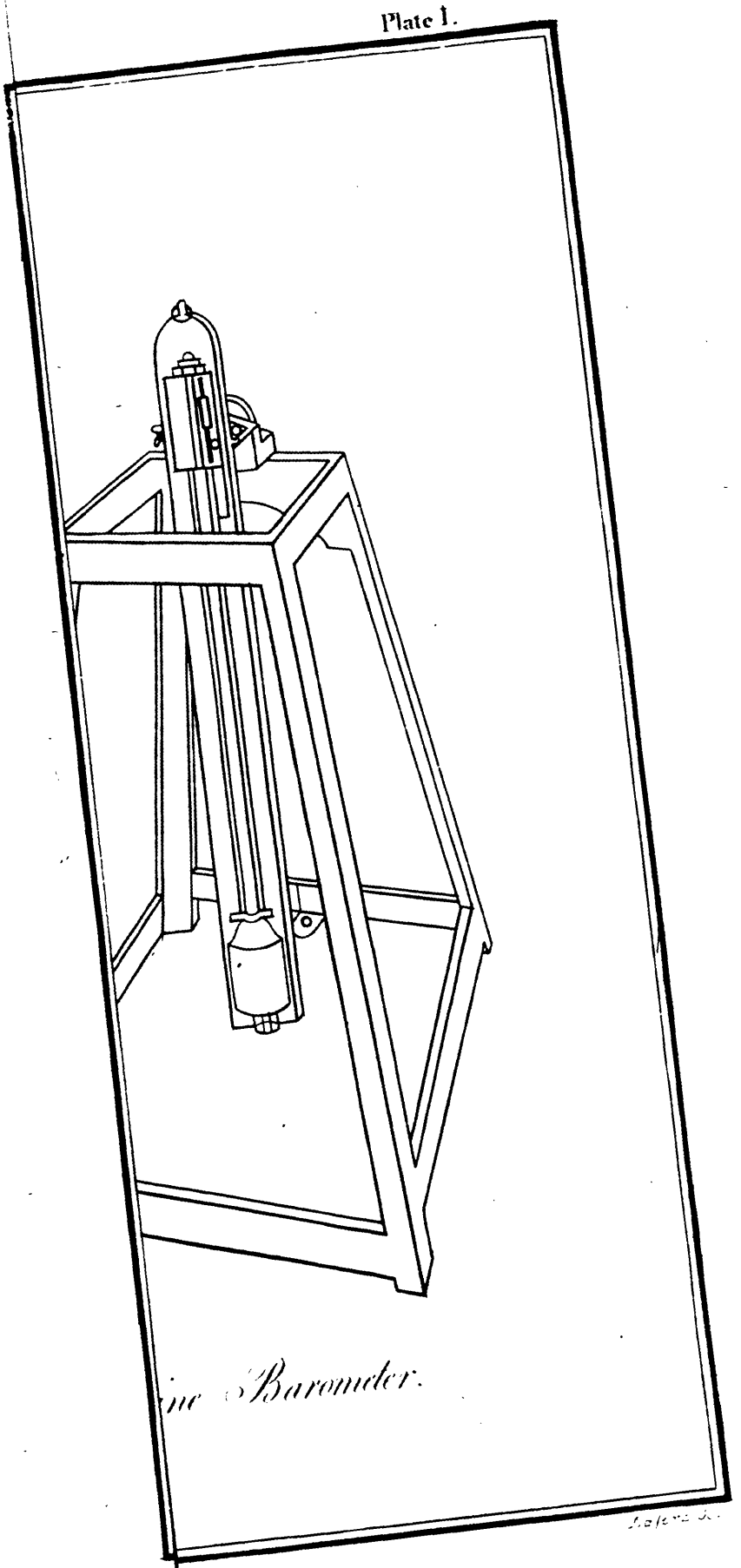

ne Barometer.

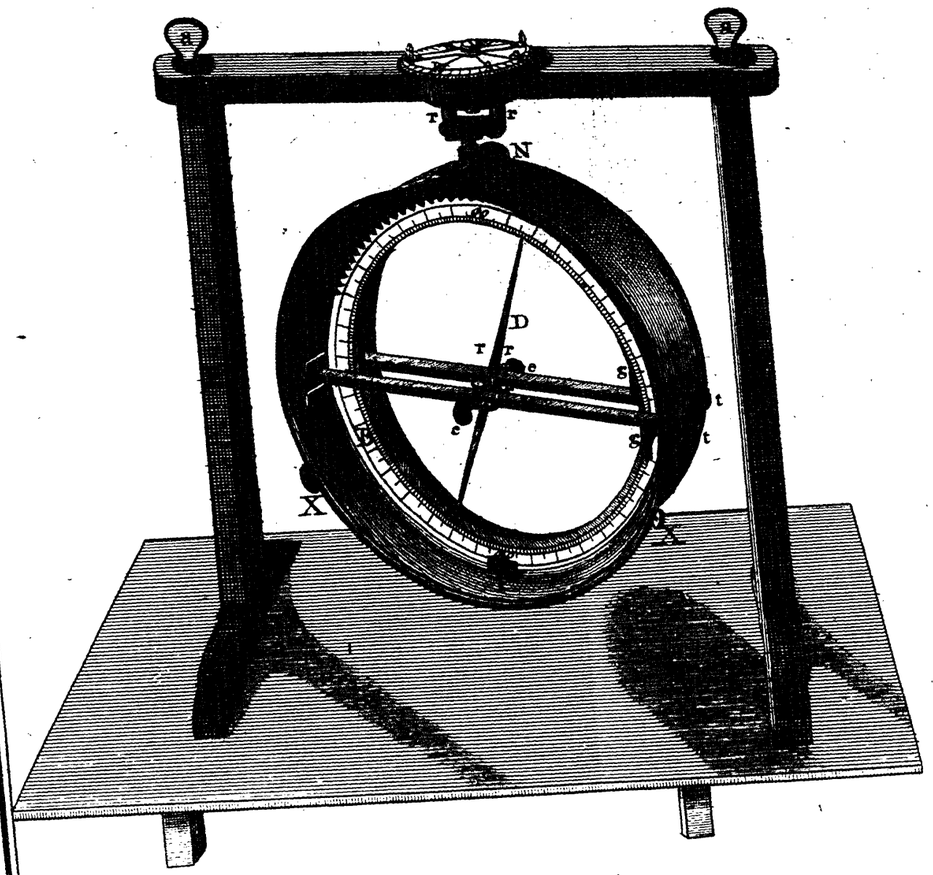

Dipping Needle.

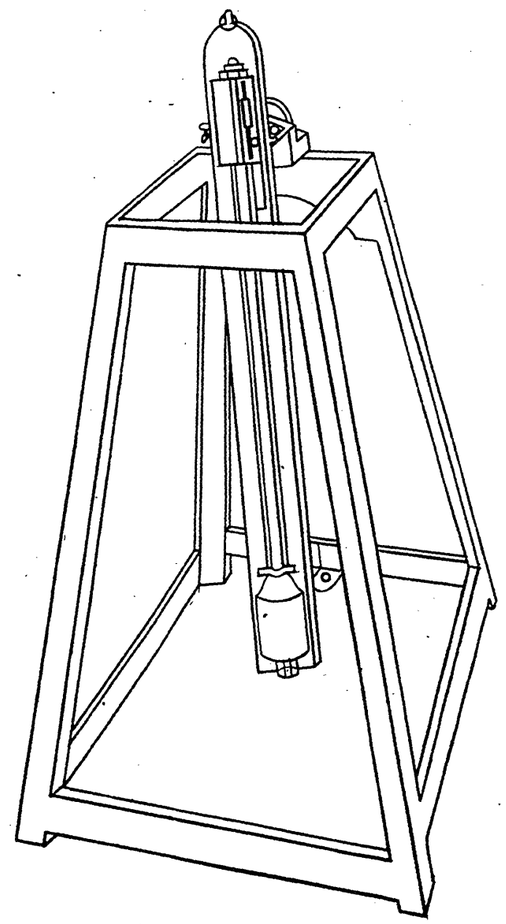

Marine Barometer.

Bayley del.

Basire Sc.

1776.	Face of the Instrument. East.	Face of the Instrument. West.	Mean Dip.	True Dips. A.	True Dips. A.	Latitude in.	Longitude in.	Remarks.
	° ′	° ′	° ′	° ′	° ′	° ′	° ′	
☽ July 22.	72 5	71 3	71 34	70 16	70 56	44 5 N	8 10 W	Marked end N. and dipped with the balance-needle.
♀ —— 26.	71 0	70 0	70 30	69 9	67 37	38 53	12 1	
♄ —— 27.	68 30	68 15	68 22	66 52	67 37	36 34¾	13 31	
☉ —— 28.	N.B. The box with the dipping needle fell from the locker in the captain's cabbin upon deck, no damage that we could perceive was done to it by this carelessness of a quarter-master.							
☉ —— 28.	66 7	66 18	66 12	64 33	65 23	34 57¾	14 8	
☽ —— 29.	65 42	65 12	65 27	63 46	64 36	33 27½	14 39	
☿ —— 31.	62 12	62 22	62 17	60 30	61 20	29 18	16 7	
☉ Aug. 4.	62 0	61 45	61 52½	59 57	60 54	28 30½	16 20	In St. Crux road island of Teneriff.
♂ —— 6.	58 36½	59 30	59 0¾	56 57	58 0	24 24⅓	18 11	
☿ —— 7.	57 20	57 30	57 25	55 14	56 18	22 25	19 0	
♃ —— 8.	56 30	56 0	56 15	54 0	55 7	20 47	19 36	
♀ —— 9.	55 11	54 51	55 1	52 41	53 51	19 17	20 28	
♄ —— 10.	52 45	53 4	52 54½	50 27	51 41	17 2	22 0	
☽ —— 12.	50 30	51 30	51 0	48 46	49 43	15 8	23 38	Within two leagues of the Isle of May, one of the Cape Verd islands.
☿ —— 14.	47 41	49 10	48 26	45 44	47 5	13 10¼	23 35	
♃ —— 15.	46 30	47 30	47 0	44 14	45 37	12 1¾	23 46	
♀ —— 16.	46 10	47 25	46 47½	44 52	45 23	11 43¼	24 19	
♄ —— 17.	44 3	45 30	44 46½	41 52	43 9	10 31	23 16	
☉ —— 18.	43 47	44 38½	44 12¾	41 18	42 46	10 0	22 52	
☽ —— 19.	41 30	43 9	42 19½	39 19	40 49	8 50¾	22 38	
♃ —— 22.	38 48	40 0	39 24	35 10	37 50	6 31½	20 57	
♀ —— 23.	37 6	39 0	38 3	34 51	36 27	6 2	20 42	
☉ —— 25.	36 12	38 38	37 25	34 11	35 48	5 2	20 10	
♂ —— 27.	34 35	35 50	35 17½	31 58	33 38	3 39¾	22 18	
♃ —— 29.	34 0	35 0	34 30	30 9	32 49	2 43¾	23 10	
♀ —— 30.	32 30	34 0	33 15	29 51	31 33	2 9¾	24 51	
♄ —— 31.	30 49	34 0	32 24½	28 58	30 41	1 4½	26 22	Doubtful, on account of ship's motion.
☉ Sept. 1.	28 52	31 15	30 3½	26 32	28 17	0 3 S	27 38	
☽ —— 2.	28 6	27 37	27 51½	24 15	26 3	1 32	28 38	
♂ —— 3.	24 24	25 2	24 43	21 1	22 52	3 14½	29 22	
☿ —— 4.	22 7	22 24	22 15½	18 30	20 22	4 40¾	30 34	
♀ —— 6.	18 51	17 53	17 57	12 59	14 5	7 3	33 21	
♄ —— 7.	14 28	14 7	14 17½	10 21	12 19	8 10	34 0	
☽ —— 9.	14 50	12 6	13 28	7 3	11 29	9 52	34 30	
♂ —— 10.	9 37	8 53	9 15	5 14	7 14	11 25½	34 24	
	2 32	2 12	2 22	1 42		14 25	34 17	Balance-needle marked end N. and dipping (poles changed).
♃ Sept. 12.	2 30	1 37	2 3½	2 10		14 32	34 39	Marked end S. and dipping (changed the poles).
	7 5	5 40	6 23½					
	1 30	1 0	1 15	2 39		14 35	34 20	Marked end N. and dip. (changed the poles) marked end S. and dip.
	6 38	6 30	6 34					

N.B. On the 28th July is mentioned an accident happening to the dipping-needle: the poles were not then changed, as the observations afterwards appeared regular

1776.	Face of the Instrument. East.	Face of the Instrument. West.	Mean Dip.	True Dip.	Latitude in.	Longitude in.	Remarks.
	° ′	° ′	° ′	° ′	° ′	° ′	
♃ Sept. 12.	neither were the poles changed on first receiving the dipping-needle on board, as it was said to be well balanced; the not doing it at either of these times was a great oversight, as we know not the error of the dips with the marked end N. and dipping in any observations before to day, and therefore cannot truly correct them according to Mr. Cavendish's directions. If we suppose the same error from the first as on to day, (the mean dip with the marked end N. exceeding the mean dip with the marked end S. by 8° 8′) then are the mean dips from the beginning to be diminished by $\frac{488}{2}$ or 244 × cosine of the dip. If again we suppose no error on receiving it, nor from the above accident, the mean dips to this day will be lessened by $\frac{244}{2}$ or 122 × cosine of the dip, as the truth may be between these two suppositions, the dip A. in the column of true dip, on the other side shall express the correction according to the first, B. according to the second supposition.						
Noon	7 15	8 7½	7 41¼	3 34	15 53¾ S	34 32 W	Marked end S. and dip.
	0 15	0 52	0 33½				Marked end N. and dip.
	Altered the balance of the dipping-needle by moving the screw N° 3 between one and two revolutions towards the center, and the screw N° 1 near one revolution from the center, when the following observations were taken.						
♀ — 13.	3 30	4 0	3 45	4 21	16 0 S	34 35 W	Marked end N. and up.
	4 22	5 32	4 57				Marked end S. and dip.
	3 30	4 50	4 10	3 58	16 4	34 36	Marked end N. and up.
	3 30	4 3	3 46				Marked end S. and dip.
♄ — 14.	5 45	7 9	6 27	6 50	17 22	35 20	Ditto.
♂ — 17.	14 52	15 24	15 8	15 30	21 57	36 0	
♃ — 19.	21 15	21 32	21 23	21 44	25 37	35 0	
♀ — 20.	24 12	23 0	23 36	23 56	27 1½	33 55	
♄ — 21.	25 30	24 0	24 45	25 26	27 52	32 35	
	26 0	26 15	26 7				
	In the above observations perceived one of the end screws to be loose, balanced the needle, and the following observations were taken.						
	° ′	° ′	° ′	° ′ ″	° ′	° ′	
	27 15	26 45	27 0	26 49 0	27 58 S	32 15 W	Marked end S. and dip.
	26 35	26 43	26 39				Marked end N. up.
♂ — 24.	29 4	29 0	29 2	29 14 0	30 16½	28 2	Marked end N. balanced-needle and S. end dipping.
☉ — 29.	34 0	34 45	34 22½	34 34 30	33 47	16 41	Marked end N.
♃ Oct. 3.	36 0	36 27	36 13½	36 25 30	34 32	9 10	
☽ — 7.	38 0	38 15	38 7½	38 19 15	35 17½	7 56	
♂ — 8.	38 30	38 45	38 49	35 31 0	35 31	7 35	
♃ — 10.	40 30	40 30	40 30	40 41 10	35 47	2 25	
♀ Dec. 6.	49 30	49 30	49 30	49 26 30	39 0	23 32 E	Marked end S.
♂ — 17.	66 0	65 28	65 44	65 41 12	48 24	55 20	
♀ — 27.	67 15	68 15	67 45	67 47 0	48 41	69 10	
	68 15	67 22	67 48				Ditto N.

1777.	Face of the Instrument. East.	Face of the Instrument. West.	Mean Dip.	True Dip.	Latitude in.	Longitude in.	Remarks.
	° ′	° ′	° ′	° ′ ″	° ′	° ′	
	The last was observed at Christmas Harbour, at the Islands of Desolation—on board.						
♀ Jan. 3.	69 12	68 46	68 59	69 45 8	48 17 S	84 0 E	Marked end North.
♂ —— 7.	69 36	70 12	69 54	69 56 49	48 10	95 9	
♂ —— 14.	73 18	73 24	73 21	73 23 23	47 19	115 12	
♂ —— 28.	70 35	69 42½	70 8¾	70 15 37	43 22⅓	147 28	Do. S.
	69 49¼	70 55½	70 22½				
	These observed in Adventure Bay at Vandieman's Land on shore.						
☿ Feb. 5.	68 15	69 30	68 52½	68 46 0	43 31¾	161 50	
♀ —— 19.	The following observations at Queen Charlotte Sound, at New Zealand, on shore, and are a mean of several days observations.						
	63 22½	64 30	63 56½	62 49 22	41 5	174 10	Do. N.
	64 17½	63 7½	63 42½				
	At Sea.						
☽ Mar. 10.	61 34	58 45	60 9	60 18 54	39 26	164 21 W	Do. N.
☿ —— 12.	59 15	58 27	58 51	59 3 30	38 41¼	163 39	Do. S.
	59 7	59 25	59 16				
♃ —— 20.	27 26	47 17	47 21½	47 13 18	29 4	158 41	
♄ —— 22.	45 15	44 8	44 41½	44 50 42	26 52	158 20	
♃ —— 27.	40 39	39 41	40 10	40 19 55	23 16¼	158 37	
♂ April 1.	35 3	34 7	34 35	34 45 40	19 51¼	158 24	
☉ May 4.	On shore at Annamocka—a mean of four sets.						
	37 35	36 57	37 16	37 14 0	20 14¾	174 49	Do. N.
	37 49	36 35	37 12				Do. S.
☽ —— 19.	37 30	36 10	36 50	36 55 0	19 46	174 22	Do. S.
	37 40	35 45	36 42				
	36 30	37 30	37 0				Do. N.
	37 30	37 45	37 8				
☉ June 22.	39 10	38 53	39 1½	39 1 30	21 8¼	175 5	At Tongotaboo.
☉ Aug. 3.	At Sea.						
	46 15	45 0	45 37½	45 41 52	27 43¾	156 6	Do. S.
♂ —— 5.	44 25	43 15	43 50	43 55 0	26 50½	153 45	
♀ —— 8.	39 10	38 45	38 57	39 2 24	23 55¾	149 4	
☉ Sept. 8.	On Shore at Point Venus, at Otahite—a mean of a great number.						
	29 23⅓	28 58⅓	29 10¾	29 3 22	17 29	149 50	Do. N. balanced-needle.
	28 8⅓	29 43⅓	28 56				Do. S.
☿ —— 9.	Unbalanced-needle.						
	27 20	27 50	27 35	29 21 52	16 44	151 8	Do. S.
	30 50	31 27½	31 8¾				Do. N.

1777.	Face of the Instrument. East	Face of the Instrument. West.	Mean Dip.	True Dip.	Latitude in.	Longitude in.	Remarks.
	° ′	° ′	° ′	° ′ ″	° ′	° ′	
♄ Oct. 25.	On shore at the island of Huaheine.						
	28 26⅔	28 12	28 19	28 19 0	S	W	Marked end S. dip.
☽ Nov. 10.	On shore at the island of Ulietea—a mean of a great number.						
	29 16	28 54	29 15	29 15 0	16 45½	151 35	Do.
☉ Dec. 14.	At Sea.						
	16 3½	16 42½	16 23	16 21 25	11 3	154 35	
☽ —— 15.	14 43	15 14	14 58	14 56 23	9 48¾	154 40	
♂ —— 16.	13 0	13 25	13 12½	13 10 53	8 56¾	155 15	
☿ —— 17.	10 7½	10 16½	10 12	10 10 22	7 38½	155 41	
♃ —— 18.	7 31	8 0	7 45½	7 15 0	6 23¾	155 50	Do. N.
	6 30	6 59	6 44½				
♀ —— 19.	2 50	3 33	3 11	3 27 14	4 56½	155 48	
♄ —— 20.	0 34	1 28	1 2	1 18 20	3 50	156 30	
	0 7	0 39	0 23	0 55 0	3 32	156 30	Do. S.
	0 46	2 8	1 27				
	+ 13½	+ 43½	+ 28½	+ 12 15	3 13	156 35	Do. N.
	— 30	+ 22	— 4				
	In these dips + signifies the South end dipping, and — the North end dipping.						
	North end dipping.						
♄ —— 20.	3 20	2 28	2 54	2 28 12	2 2½	156 50	
☽ —— 22.	6 23	5 32	5 57	5 31 24	0 34⅓	157 2	
♂ —— 23.	8 51	8 33	8 42	8 16 30	0 44¾ N	157 25	
☿ —— 24.	11 37½	11 20¼	11 28¾	10 53 52	2 2½	157 34	Do. S.
	10 21½	10 16½	10 19				
♄ —— 27.	At anchor at Christmas Island.						
	11 13⅓	11 16⅔	11 13½	11 54 15	1 58	157 30	Do. N.
	12 10	13 10	12 35				Do. S.
1778.	At Sea.						
☉ Jan. 4.	16 33½	15 58½	16 16	15 42 42	4 8	157 14	Do. N.
♃ —— 8.	22 51	23 12	23 1½	22 29 18	7 45	155 2	
♀ —— 9.	23 40	24 27	24 3½	23 37 30	8 12¼	154 56	Do. S.
	23 20	23 3	23 11½				
☽ —— 12.	29 55	29 30	29 42½	29 54 56	12 17½	155 54	
♃ —— 15.	37 39	37 15	37 27	37 38 20	17 40¼	158 36	
☉ —— 18.	41 46	42 16	42 1	42 1 7	21 17½	159 12	Do. N.
	42 5	42 0	42 1¼				
☿ —— 28.	41 42	43 5	42 23	42 10 54	21 21	160 0	
	These last two days observations were made when off the west side of the island of Atowi.						

1778.	Face of the Instrument. East.	Face of the Instrument. West.	Mean Dip.	True Dip.	Latitude in.	Longitude in.	Remarks.
	° ′	° ′	° ′	° ′ ″	° ′	° ′	
				At Sea.			
☿ Feb. 4.	45 0	46 45	45 52½	45 40 35	24 31 S	160 30 W	Marked end N.
♀ —— 6.	49 15	50 10	49 42	49 31 22	27 41½	159 30	
☉ —— 8.	51 29	52 0	51 45	51 25 30	30 18	158 53	Do. S.
	51 8	51 4	51 6				
♄ —— 14.	52 20	52 12	52 16	52 43 30	31 35	153 47	
☿ —— 18.	55 10	55 28	55 19	55 44 36	36 53	153 58	
♄ —— 21.	58 30	59 0	58 45	59 15 0	39 6	150 15	Do. N.
	60 15	59 15	59 45				
☉ March 1.	68 20	66 30	67 25	67 16 30	44 49	132 1	
♃ —— 19.	68 0	66 40	67 20	67 11 15	44 57½	126 20	
☉ April 5.	At King George's Sound, on the N. W. coast of America.						
	71 47½	72 20	72 0	72 0 0	49 36	126 43	Do. S. } on shore.
	72 48¾	71 3¾					Do. N. } on shore.
	74 12⅓	72 45	73 11	73 11 0			Do. S. } on board.
	73 0	72 43½					Do. N. } on board.
♃ May 14.	75 22	75 30	75 26	75 26 15	58 22	139 8	Do. N.
☉ —— 17.	78 30	79 15	78 32	78 32 15	60 50½	147 4	
	The last was observed when at anchor in Sandwich Sound.						
♃ June 18.	70 44	71 10	70 57	70 57 30	55 24½	159 10	Do. N.
☉ July 14.	71 55	72 50	72 22½	72 23 0	58 12	161 15	
♃ Aug. 13.	76 45	77 30	77 7	77 7 15	66 32½	168 3	
	The last observed when in the Straights between Asia and America.						
☿ —— 19.	79 20	80 0	79 40	79 40 0	70 6¾	163 24	
☿ —— 26.	78 45	79 25	79 35	79 35 0	69 36	174 46	
☉ Sept. 13.	Observations made on shore in Norton Sound.						
	77 40	75 15	76 27½	76 25 0	64 33	162 40	Do. S.
	76 0	76 45	76 22½				
☽ Oct. 12.	68 45	70 15	69 30	69 23 30	53 55	166 30	Do. N.
	69 55	68 45	69 17				
♂ Nov. 17.				At Sea.			
1779.	55 18	54 30	54 54	54 49 15	32 26	153 0	
♂ Jan. 12.	39 0	39 0	39 0	38 30 0	18 35¾	155 45	Do. S.
	38 5	37 55	38 0				
☽ —— 25.	Observations made on shore in Keragegooa Bay at the Island of Oeyhea.						
	40 40	40 5	40 22½	40 22 30	19 28	156 30	Do. N. balanced-needle.
	41 7½	40 15	40 41½	40 41 15			Do. unbalanced-needle.
☿ Feb. 3.	41 50	41 50		41 50 0	On board the ship.		Do. balanced-needle.
	40 35	40 42		40 30 45			Do. unbalanced-needle.

1779.	Face of the Instrument. East.	Face of the Instrument. West.	Mean Dip.	True Dip.	Latitude in.	Longitude in.	Remarks.
	° ′	° ′	° ′	° ′ ″	° ′	° ′	
	At anchor off Atowi, one of Sandwich Islands.						
♄ March 6.	43 11¼	43 11¼		43 11 15	21 56¾ N	159 44 W	Marked end N.
	At Sea.						
☉ —— 21.	41 30	41 20	41 25	40 55 30	20 37¾	167 47	Do. N.
♃ —— 25.	38 45	39 0	38 52½	38 21 30	19 57¼	175 48	
♀ —— 26.	37 30	37 30	37 30	37 0 0	19 48¼	176 51 W	Do. S.
	36 20	36 40	36 30				
♀ April 2.	38 15	37 45	38 0	38 29 38	22 36¼	177 20 E	
♄ —— 3.	38 45	39 0	38 52½	39 21 15	24 38¼	175 21	
♃ —— 8.	42 10	42 50	42 30	42 55 0	30 39	167 4	Do. N.
	43 0	43 40	43 20				
♀ —— 9.	43 45	44 45	44 15	43 47 0	32 16	166 39	
♄ —— 10.	45 0	46 15	45 37½	45 10 0	33 30	166 0	Marked end N. dipping.
♀ —— 16.	53 40	54 21	54 0½	53 34 7	42 12¾	159 41	Do. N.
	53 30	52 45	53 7½				Do. S.
♄ —— 17.	54 15	54 15	54 15	54 26 0	43 18¼	157 37	
♂ June 7.	Observations at the harbour of St. Peter and Paul at Kamtschatka.						
	62 57½	63 25	63 11¼	63 8 7	53 0½	158 44	Do. S.
	62 37½	63 32½	63 5				Do. N.
	At Sea.						
☽ —— 21.	66 15	64 27½	65 21¼	65 31 15	55 51¼	163 51	Do. N.
	65 30	65 52½	65 41¼				Do. S.
♃ —— 24.	67 37½	66 52½	67 15	67 12 0	58 20½	167 31	Do. N.
♀ —— 25.	68 45	68 5	68 25	68 22 0	59 7¾	168 47	
☿ —— 30.	72 37½	71 25½	72 1½	71 54 37	61 48½	179 30 W	Do. S.
	71 45	71 52½	71 48¾				
♄ July 3.	73 52½	74 30	74 12¾	74 23 0	63 36	173 29	
♀ —— 9.	78 45	79 15	79 0	79 7 15	69 12¾	171 55	
♄ —— 10.	78 15	78 45	78 30	78 37 30	68 1	171 45	
☿ —— 14.	78 37½	79 22½	79 0	79 7 15	69 36½	171 45	
☉ —— 18.	79 45	79 52½	79 48¾	79 58 7	70 26½	164 8	Do. N.
	80 15	80 0	80 7½				
☿ —— 28.	79 15	78 22	78 48	78 33 30	67 8½	170 41	
☉ Aug. 1.	76 15	75 52	76 3	75 45 15	64 23½	170 58	
☽ —— 2.	76 0	77 0	76 30	76 7 30	64 3	171 10	Do. S.
	75 0	76 30	75 45				
♄ —— 7.	71 0	71 50	71 25	71 25 0	59 33¾	177 10	Do. N.
	At St. Peter and St. Paul, the second time.						
☉ Sept. 15.	63 15	62 30	62 52	63 1 0			Do. N.
	62 30	63 50	63 10				Do. S.

1779.	Face of the Instrument. East.	Face of the Instrument. West.	Mean Dip.	True Dip.	Latitude in.	Longitude in.	Remarks.
	° ′	° ′	° ′	° ′ ″	° ′	° ′	
♃ Oct. 14.	At sea, on board the Discovery.						
	59 30	59 0	59 15	59 20 30	48 17½ N	155 45 E	Marked end N.
	59 0	59 52	59 26				Do. S.
♀ —— 15.	56 45	57 35	57 10	57 10 0	46 30	155 31	
♀ —— 22.	51 10	52 20	51 45	51 52 30	40 59	148 17	Do. N.
	52 30	52 30	52 0				
♃ —— 28.	48 5	48 15	48 10	48 10 0	38 6	142 0	
♄ —— 30.	47 0	46 15	46 37	46 26 0	36 41½	141 56	Do. S.
	46 22	47 7	46 15				
☉ —— 31.	45 0	45 0	45 0	45 17 12	35 30½	141 50	
☉ Nov. 7.	42 30	43 10	42 50	43 7 48	33 52⅓	148 5	
♂ —— 9.	39 37	40 30	40 3	40 21 36	41 40	146 33	
♄ —— 13.	31 20	31 35	31 27	31 47 0	25 56	143 16	
☉ —— 14.	29 7	29 0	29 3	29 31 30	24 36	142 0	Do. S.
	30 0	30 0	30 0				Do. N.
♂ —— 16.	30 37	31 0	30 48	30 58 45	25 5	138 43	
♄ —— 20.	26 22	25 30	25 56	23 17 15	22 7½	129 47	
1780.							
♄ Jan. 15.	21 20	21 45	21 32½	21 44 0	18 58	113 41	
♃ —— 20.	2 15	2 0	2 7½	2 0 0	8 46½	107 45	Do. S.
	1 45	2 0	1 52½				
☿ —— 26.	In the harbour at Pulo Condor.						
	1 42½	1 0	1 21	1 55 30	8 39	106 19	Do. N.
	3 15	1 45	2 30				
♄ —— 29.	1 30	2 30	2 0	1 39 30	6 53¾	105 11	
☽ —— 31.	8 45	10 0	9 22½	9 2 15	3 18⅓	104 16	
♂ Feb. 1.	12 7	13 45	12 59	12 51 45	1 20¾ N	105 0	Do. S.
	12 7	13 22	12 44				
☿ —— 2.	14 30	16 15	15 22	15 28 10	0 22 S	104 54	
☉ —— 6.	24 15	24 30	24 22	24 27 50	4 36½	104 2	
♃ —— 17.	At Prince's Island in the Streights of Sunda.						
	28 30	28 0	28 15	28 20 30	6 37	105 0	
	At sea.						
☿ —— 23.	34 30	35 30	35 0	35 5 15	13 35	103 23	
☿ March 1.	44 30	45 30	45 0	45 4 0	16 51	91 37	Do. N.
	44 30	45 45	45 7½				
♄ —— 4.	47 15	47 30	47 22	47 17 15	18 29	88 55	
♃ —— 9.	52 15	52 0	52 7	52 2 45	20 23½	75 10	
☿ —— 15.	56 0	55 45	55 52	55 48 4	22 37½	63 3	
♄ —— 18.	58 15	57 0	57 37	57 29 30	25 8¼	58 33	Do S.
	57 0	57 45	57 22				

1780.	Face of the Instrument. East.	Face of the Instrument. West.	Mean Dip.	True Dip.	Latitude in.	Longitude in.	Remarks.
	° ′	° ′	° ′	° ′ ″	° ′	° ′	
♀ Mar. 24.	56 30	56 0	56 15	56 18 15	29 6 S	42 53 E	Marked end N.
☽ —— 27.	53 45	54 45	54 15	54 17 0	31 3	37 24	Ditto S.
	54 45	54 0	54 22½				Ditto N.
♄ April 1.	52 30	54 0	53 15	50 27 0	32 11	30 41	Ditto S.
	50 30	50 15	50 22				
♂ —— 4.	49 0	50 0	49 30	49 37 0	35 23	24 55	Ditto N.
	50 0	49 30	49 45				
♃ —— 6.	46 30	45 0	45 37	45 34 0	35 49	21 33	
	At False Bay, Cape of Good Hope.						
♃ —— 20.	46 42½	45 40	45 56½	45 57 30	34 11½	18 29½	Ditto N.
	46 18½	45 38½	45 58½				Ditto S.
♄ May 13.	44 0	44 40	44 20	44 22 0	32 32	15 56	
☽ —— 15.	39 15	40 30	39 5	39 7 15	29 54	10 40	Ditto S. Ship much motion.
☿ —— 17.	33 45	35 0	34 22	34 24 30	27 36	5 48	
♄ —— 20.	27 45	28 30	28 7	28 15 0	24 35	0 0	Ditto N.
	29 0	27 45	28 22				
☽ —— 22.	22 15	23 15	22 45	22 42 0	22 16	4 17 W	Ditto S.
♃ —— 25.	13 45	13 30	13 37	13 33 54	18 12	9 7	Ditto N.
♄ —— 27.	8 15	8 30	8 22½	8 37 15	15 54	12 4	Ditto S.
	8 30	9 15	8 52				Ditto N.
☉ —— 28.	7 0	8 0	7 30	6 56 30	14 56	13 0	Ditto S.
	6 0	6 45	6 22				Ditto N.
♂ —— 30.	3 0	3 30	3 15	4 41 15	13 39½	14 52	Ditto S.
	6 30	5 45	6 7½				Ditto N.
☿ —— 31.	0 45	1 7½	0 56½	1 18 30	12 46	15 45	Dito N. South end dipping.
	0 30	1 15	0 52½	1 14 30	12 11	15 58	Ditto N. } North end dipp.
	— 25	+ 20	— 2	— 12 0	12 0	16 12	Ditto S. } North end dipp.
	— 45	0 0	— 22				
	In these dips + signifies the South end dip; and — the North end dip.						
♀ June 2.	2 15	2 45	2 30	2 17 15	11 15	17 15	Ditto S.
☽ —— 5.	8 45	9 15	9 0	8 47 30	8 51	20 3	
☿ —— 7.	14 45	15 15	15 0	14 47 45	4 50	22 40	
♀ —— 9.	20 0	20 30	20 15	20 3 0	3 12	25 4	
☉ —— 11.	25 30	26 15	25 52	25 40 30	0 19	26 0	
♂ —— 13.	32 45	33 0	32 52	32 41 15	3 48 N	25 50	
♀ —— 16.	35 30	35 45	35 37	35 26 30	5 25	26 18	
☉ —— 18.	38 37	39 0	38 48½	38 36 45	7 10	27 2	Ditto N.
	38 30	38 20	38 25				
♀ —— 23.	42 30	43 15	42 52	43 2 0	9 44	28 54	
☿ —— 28.	51 30	49 45	50 37	50 44 45	15 25	33 26	
♄ July 1.	55 0	54 20	54 40	54 48 0	20 0	36 57	
♂ —— 4.	59 30	58 45	59 7	59 14 9	24 4	38 45	

1780.	Face of the Instrument. East.	Face of the Instrument. West.	True Dip.	Mean Dip.	Latitude in.	Longitude in.	Remarks.
	° ′	° ′	° ′	° ′ ″	° ′	° ′	
☉ July 9.	65 0	63 30	64 15	64 20 30	29 33 N	41 3 W	Marked end N.
	63 52	65 0	64 26				Do. S.
☿ —— 12.	66 30	67 30	67 0	66 55 30	32 11	41 10	
☽ —— 17.	69 15	70 52	70 3½	70 0 0	36 13	40 1	
♄ —— 22.	69 20	70 30	69 55	70 7 0	38 20	37 8	Do. N.
	71 0	69 40	70 20				
♀ —— 28.	73 0	71 15	72 7½	72 7 30	41 9	31 19	
♂ Aug. 1.	74 30	72 15	73 22	72 54 0	44 0	25 36	Do. S.
	71 22	73 30	72 26				
♄ —— 5.	71 30	73 0	72 15	72 15 0	45 50	19 18	

DIRECTIONS for balancing the MAGNETIC NEEDLE,

By the Honourable HENRY CAVENDISH, F.R.S.

THE method of balancing the needle, after it is magnetical, depends on the following circumſtances, namely,

Firſt, That encreaſing the diſtance of the uppermoſt ſide ſcrew from the center encreaſes the dip, and that encreaſing the diſtance of the uppermoſt end ſcrew has the contrary effect.

Secondly, That the needles ought to be balanced in ſuch a manner that the dip ſhould be as great with one ſide ſcrew uppermoſt as the other, and alſo the one end ſcrew uppermoſt as the other.

Thirdly, That the ſide ſcrew which is uppermoſt when the face is turned to the weſt, is loweſt when it is turned to the eaſt.

If the needle is laid horizontal with the croſs uppermoſt, and the marked end pointing to the north, I call that ſide ſcrew which points towards the weſt N° 2. and that which points to the eaſt 0; I alſo call that end ſcrew, which is toward the marked end of the needle, the ſcrew N° 3. and the oppoſite ſcrew N° 1.; this being premiſed, the method will appear beſt by an example.

N. B. The ſcrews or buttons are marked one dot (.) two dots (..) three dots (...) and a pointer to each to tell the number of the revolutions.

Suppoſe that with the marked end of the needle to the north, and the face {eaſt / weſt} and conſequently with N° 2. {uppermoſt 71 10 / loweſt 72 20} the dip.

I then change the poles, and find that with the marked end to the ſouth or uppermoſt, and the face {weſt / eaſt} and conſequently with N° 2. {uppermoſt 72 30 / loweſt 72 40} the dip.

By comparing the mean of the firſt and third obſervations with the mean of the ſecond and fourth, it appears that the dip is 1° 10′ leſs when N° 2. is uppermoſt, than when it is loweſt, or the dip is 35′ too ſmall when N° 2. is uppermoſt.

In like manner by comparing the mean of the first and second with the mean of the third and fourth, it appears that the dip is 1° 20′ too great with the screw N° 3. uppermost.

In order to find how much the screws should be altered, I find how much the dip is altered by moving one of the side screws a number of revolutions, and also how much it is altered by moving one of the end screws; for example, I move N° 2. three revolutions further from the center, the face still continuing west, and find the dip 72°, so that as the dip before that alteration was 73° 40′, altering N° 2. three revolutions, alters the dip 100′. I then restore that screw to its former position, and move the screw N° 3. seven revolutions further from the center, and find the dip 72° 10′.

So that altering the screw N° 3. seven revolutions alters the dip 90′. I then restore that screw also to its first position, it is indifferent which of the two screws N° 2 or 0, or of the two screws N° 3. or N° 1. you move, but it is best moving them in such manner as to make the dip approach nearer to the true dip, rather than the contrary way; hence, as it was found that the dip was 35′ too small when N° 2. was uppermost, it follows that N° 2. must be moved $3 \times \frac{35}{100}$ or $1\frac{1}{20}$ of a revolution further from the center; and for the like reason the screw N° 3. must be moved $7 \times$ or $\frac{80}{90}$ $6\frac{2}{9}$ revolutions further from the center.—So far Mr. Cavendish.

The Needle may be readily balanced as follows:

TAKE all the magnetism out of it, or so far that it may not affect a fine sewing needle, which may be done by a few trials.

Place two of the cross wires, which carry the adjusting balls, in the direction of the needle, and the other two will be at right angles thereto; place the needle in an horizontal position, and balance it there by means of the two balls on the wires that are in the same direction with it; place the needle in a vertical position, and adjust it there by means of the balls on the wires that are at right angles to it—the needle being well balanced in these two positions, will rest in any other—give it magnetism, and it will be fit for use. W. BAYLY.

The Method of correcting the observed Dip when the Poles are not changed.

By the Hon. HENRY CAVENDISH, F.R.S.

WHEN the poles are changed, and the dip observed with each face to the east, the mean of all four observations is the true dip. The mean of the two observations with the marked end of the needle pointing to the north, I call the mean dip with the mark to the north.

I imagine now that the excess or defect of the mean dip with the mark to the north, above that with the other end to the north, will be nearly in proportion to the co-sine of the dip.

Suppose therefore that you find on reversing the poles at any time, that the mean dip with the mark to the north exceeds that with the other end to the north by 40′, the true dip being 72°; according to this experiment it should seem that the mean dip with the mark to the north exceeds that with the other end to the north by 130′, multiplied by the co-sine of the dip; for 40′ equals 130′ into the co-sine of 72°. Suppose also, that the next time you change the poles, you find that the excess of the mean dip with the mark to the north above that with the end unmarked to the north is 2° 19′, the true dip being 5°. By this observation the mean dip with the marked end to the north exceeds that with the unmarked by 150′ × the co-sine of the dip. By the mean of both observations it is 140′ into the co-sine of the dip. Therefore in all the observations made between these two times I would correct the mean dip according to this supposition; for example, if at any place you find the mean dip with the mark to the

north to be 60°, the true dip will be $60° - \frac{140'}{2} \times \text{cos. } 60°$, or 59° 25′; or if you find the mean dip with the unmarked end to the north to be 60°, the true dip will be $60° + \frac{140'}{2} \times \text{cos. } 60°$ or 60° 35′.

N. B. If you ſhould have omitted to correct the mean dips in this manner while you are at ſea, it may be done when you come home.

ASTRONOMICAL OBSERVATIONS

FOR DETERMINING

THE LATITUDE OF THE SHIP AND HER LONGITUDE,

BY A WATCH, N° 2.

The Third made by Mr. KENDALL for the BOARD OF LONGITUDE,

ON HIS OWN CONSTRUCTION,

Made on Board His MAJESTY'S SLOOP DISCOVERY,

IN HER LATE VOYAGE ON DISCOVERIES,

IN THE YEARS 1776, 77, 78, 79, 80.

BY WILLIAM BAYLY.

1776.	Time per Watch N° 1.	Apparent Time.	Observed Alt. of the ☉'s L.L.	Therm.	Latitude in.	Longitude in.	N° of Observations.	Remarks.
	H. ′ ″	H. ′ ″	° ′	°	° ′	° ′ ″		
♀ Aug. 2.	20 54 17	20 26 19	36 43,0	66	48 30 N	6 9 24 W	6	Fine weather.
		Noon.	58 41,5	67	48 26⅙			
♄ —— 3.								
☉ —— 4.	20 9 56	19 34 31	28 8,3	67	46 43	8 4 18	6	
		Noon.	60 0,0	65	46 35⅐			
☽ —— 5.								
	19 52 48	19 13 5	24 7,3	62	45 3	9 10 15	6	
		Noon.	61 43,0	62	44 35½			
♂ —— 6.								
	19 22 33	18 39 49	18 3,2	61½	43 16	9 57 13	6	
		Noon.	63 1,0	65	43 0			
☿ —— 7.								
	20 15 51	19 29 50	27 3,2	60	41 40	10 48 20	6	
		Noon.	64 28,0	67	41 16⅓			
♃ —— 8.								
		Noon.	65 57,5	69	39 29½			
♀ —— 9.								
	22 3 7	21 12 45	46 37,4	66	38 8	11 58 0	6	
		Noon.	67 13,0	70	37 56⅓			
♄ —— 10.								
	21 8 57	20 15 16	35 45,3	67	36 30	12 50 9	6	
		Noon.	68 36,0	73	36 15⅓			
☉ —— 11.								
	20 6 54	19 8 33	22 10,4	72	35 6	14 2 25	6	
		Noon.	69 38,0	71	34 55			
☽ —— 12.								
	19 48 0	18 44 1	16 52,5	71	33 48	15 29 20	6	
		Noon.	70 42,0	72	33 32¾			
♂ —— 13.								
	6 11 27	5 4 51	19 3,8	72	33 20	16 9 40	6	
	20 2 16	18 52 16	18 21,7	72	33 10	17 3 0	6	Due N. of Funchol.
	20 59 22	19 49 5	30 12,0	73	33 10	17 6 0	6	
		Noon.	70 47,0	74	33 9			
☿ —— 14.								
	20 31 41	19 18 13	23 37,2	73	33 12	17 57 15	6	
		Noon.	70 24,0	74½	33 13			
♃ —— 15.								
	20 7 42	18 52 18	18 6,6	73	32 51	18 29 0	6	
		Noon.	70 34,0	74½	32 43			
♀ —— 16.								
	20 31 49	19 14 7	22 23,2	73	36 42	19 7 0	6	
		Noon.	71 24,0	75	31 34¾			
♄ —— 17.								
	20 19 52	19 0 0	19 6,2	74	30 19	19 45 37	6	
	21 41 49	20 19 25	36 15,5	74	28 30	20 24 0	6	
☉ —— 18.								
☽ —— 19.		Noon.	74 12,0	74	28 7½			
	6 54 59	17 31 51	11 45,3	75	27 41	20 36 30	3	
	20 21 32	18 57 7	17 56,6	74	26 21	20 57 30	6	
		Noon.	76 4,5	75	25 55			
♂ —— 20.								
	21 47 45	20 20 33	36 34,5	77	23 56	21 43 20	6	
		Noon.	78 0,5	78	23 39⅓			
☿ —— 21.								
	22 42 41	21 13 3	48 38,6	76	22 3	22 31 34	6	Fine weather.
		Noon.	79 22,0	77½	21 57			
♃ —— 22.								
	23 15 26	21 44 10	55 52,1	77	20 58	22 52 20	6	
	22 15 10	20 41 4	41 10,8	77	19 32	23 38 30	6	
♀ —— 23.								
♄ —— 24.		Noon.	81 17,0	77	19 21			
	0 10 21	22 34 43	67 49,2	77	18 3	23 53 18	6	
		Noon.	82 16,7	80	18 0			
☉ —— 25.								
	22 54 17	21 19 10	50 12,4	81	17 2	24 1 58	6	
		Noon.	82 59,0	81	16 54			
☽ —— 26.								

1776.	Time per Watch N° 1.	Apparent Time.	Observed Alt. of the ☉'s L.L.	Therm.	Latitude in.	Longitude in.	N° of Observations.	Remarks.
	° ′ ″	° ′ ″	° ′		° ′	° ′ ″		
☽ Aug. 26.	21 40 35	20 5 51	32 36,7	82	16 21 N	24 0 15 W	3	Fine weather.
♂ —— 27.	21 1 50	19 27 51	23 18,6	80	14 42	23 53 21	6	
☿ —— 28.		Noon.	84 53,0	82	14 20⅓			
	21 39 38	20 6 24	32 27,0	79	12 44	23 46 48	6	
♃ —— 29.		Noon.	83 22,0	80	12 29⅓			
	21 29 18	19 55 36	29 43,2	79½	11 28	23 58 10	6	
♀ —— 30.		Noon.	87 13,0	80	11 17⅓			
☉ Sept. 1.	21 10 29	19 44 56	26 44,9	77	8 18	22 10 0	6	
☽ —— 2.		Noon.	89 14,0	80	8 11			
	23 39 3	22 16 57	64 15,7	79	8 9	21 23 22	6	
☿ —— 4.		Noon.	89 16,0	80	7 25			
	22 8 28	20 57 36	44 31,5	79½	6 35	18 44 0	6	
♃ —— 5.		Noon.	89 48,0	79½	6 31			
	22 42 31	21 37 0	54 18,5	79	5 30	17 29 7	6	
♀ —— 6.		Noon.	89 20,0	80	5 24			Very hazy and uncertain.
	22 17 23	21 17 45	49 24,7	80	4 50	15 55 24	3	
♄ —— 7.	21 15 0	20 21 50	35 29,2	78½	4 27	14 33 45	3	
☉ —— 8.		Noon.	88 47,0	79	4 23½			
☽ —— 9.		Noon.	88 34,0	79	3 47			
	21 23 3	20 37 29	39 18,3	78	3 26	12 52 24	6	Fine weather.
♂ —— 10.		Noon.	88 32,0	79	3 22⅓			
	22 20 21	21 30 52	52 33,8	78	2 47⅙	13 54 30	6	
☿ —— 11.		Noon.	88 15,0	79	2 42			
	22 38 41	21 48 2	56 49,0	76½	2 13	14 16 45	6	
♃ —— 12.		Noon.	88 6,0	76	2 11⅓			
	21 57 1	21 10 46	47 31,2	77	1 57	13 16 0	4	
♄ —— 14.		Noon.	88 23,0	78	1 42			
☉ —— 15.		Noon.	88 17,0	77	1 12			
	20 25 32	19 39 43	24 44,5	77	0 37	13 24 40	6	
☽ —— 16.		Noon.	88 0,0	79	0 31½ N			
	20 57 28	20 7 8	31 33,9	77	0 5 S	14 37 48	6	
♂ —— 17.		Noon.	87 40,0	79	0 11⅔			
	3 52 42	3 1 25	44 24,3	77	0 18	14 53 30	3	
☿ —— 18.	4 12 42	5 18 7	40 13,6	76	0 54	15 49 13	6	
♃ —— 19.		Noon.	87 1,0	76½	1 37⅓			
♀ —— 20.		Noon.	86 25,0	77	2 36¾			
♄ —— 21.		Noon.	85 46,0	79	3 39			
	4 34 41	3 27 7	37 54,1	75½	3 51	19 18 45	6	
☉ —— 22.		Noon.	84 33,0	77	5 15¾			
	4 41 46	3 30 19	37 12,7	77	5 27	20 22 19	6	Hazy, bad observing.
	5 20 35	4 8 58	27 27,0	76	5 30	20 25 24	3	
☽ —— 23.		Noon.	83 25,4	77	6 46⅓			
	4 23 51	3 9 17	42 10,4	77	6 57	21 15 7	6	
♂ —— 24.		Noon.	82 19,0	76	8 16¾			
	22 3 20	20 44 32	40 28,8	75	9 39	22 26 37	3	Hazy weather.
☿ —— 25.		Noon.	81 7,0	76	9 52			

1776.	Time per Watch N° 1.	Apparent Time.	Observed Alt. of the ☉'s L.L.	Therm.	Latitude in.	Longitude in.	N° of Observations.	Remarks.
	H. ′ ″	H. ′ ″	° ′	°	° ′	° ′ ″		
☿ Sept. 25.	20 19 12	18 59 1	14 37,0	77	11 6 S	22 52 4W	6	Fine weather.
♃ —— 26.		Noon.	79 57,0	77½	11 25⅔			
	22 29 48	21 6 5	45 24,4	74	12 52	23 50 13	6	
♀ —— 27.		Noon.	78 36,0	75	13 10			
	23 38 17	22 13 22	60 36,2	76	15 2	24 13 40	6	
♄ —— 28.		Noon.	76 57,0	75	15 12			
	22 12 52	20 46 22	40 12,7	74	16 55	24 41 52	6	
☉ —— 29.		Noon.	75 21,0	74	17 12			
	21 24 8	19 56 9	28 16,2	74	18 40	25 8 40	6	
☽ —— 30.		Noon.	74 0,0	74	18 56½			
	21 21 1	19 52 33	27 24,3	73	20 0	25 20 42	6	
♂ Oct. 1.		Noon.	73 9,5	73	20 10⅓			
	23 0 16	21 32 19	50 7,3	67	20 50	25 17 49	4	
☿ —— 2.		Noon.	72 49,0	69	20 54			
	22 0 0	20 33 16	36 55,0	68	21 12	25 4 0	3	
♃ —— 3.		Noon.	72 44,0	71	21 22⅓			
	20 43 46	19 17 15	29 28,0	69	21 46	25 5 36	6	
♀ —— 4.		Noon.	72 27,0	69½	22 2½			
	21 1 5	19 34 54	23 35,3	71	23 5	25 4 45	4	
♄ —— 5.		Noon.	71 34,0	72	23 18¾			
☉ —— 6.		Noon.	70 34,0	71½	34 41¾			
	20 40 15	19 18 23	19 57,8	70	25 49	24 8 21	6	
☽ —— 7.		Noon.	69 26,0	69	26 12¾			
	21 51 34	20 33 37	36 27,7	68½	27 40	23 13 41	4	
♂ —— 8.		Noon.	68 8,0	69	27 53¾			
☿ —— 9.		Noon.	67 33,0	68	28 51⅓			
	21 31 26	20 23 25	34 20,5	66½	29 6	21 7 30	3	
♃ —— 10.		Noon.	67 42,5	67	29 4½			
	22 17 34	21 11 37	44 43,0	66	28 53	20 25 20	3	
♀ —— 11.		Noon.	68 18,0	67	28 52			
	21 20 43	20 16 52	33 23,0	67	28 40	19 47 30	3	Hazy bad weather.
♄ —— 12.		Noon.	68 54,1	61	28 47¼			
☉ —— 13.		Noon.	67 31,0	67	30 23¾			
	22 26 44	21 38 51	50 12,5	66	30 26	16 4 40	3	
☽ —— 14.		Noon.	67 51,0	67	30 26			
	21 51 30	21 7 27	44 13,5	66	30 18	15 12 10	3	
♂ —— 15.		Noon.	68 13,5	67	30 25¾			
	22 31 54	21 57 6	53 33,0	66	31 36	12 54 30	3	
♃ —— 17.		Noon.	67 28,0	67	31 55¼			
	21 4 39	20 42 37	39 3,4	66	32 46	9 48 42	6	
♀ —— 18.		Noon.	66 53,0	66	32 51¾			
	21 41 31	21 33 50	49 6,7	65	33 23	6 15 54	6	Fair weather.
♄ —— 19.		Noon.	66 37,0	66	33 29⅓			
☉ —— 20.		Noon.	66 45,5	66	33 42¼			
	3 41 7	3 48 37	32 56,3	57	33 43	2 31 37	6	
	20 2 39	20 14 17	33 40,6	58	33 40	1 30 48	6	

1776.	Time per Watch N° 2.	Apparent Time.	Observed Alt. of the ☉'s L. L.	Therm.	Latitude in.	Longitude in.	N° of Observations.	Remarks.
	H. ′ ″	H. ′ ″	° ′	°	° ′	° ′ ″		
☽ Oct. 21.		Noon.	67 21,0	59	33 39⅔ S			Fair weather.
	3 39 33	3 50 41	32 42,8	59	33 41	1 3 30 E	3	
♂ —— 22.		Noon.	67 27,5	57	33 42½			
	5 11 20	5 35 49	11 9,7	57	33 46	1 38 52	3	Hazy weather.
	19 17 19	19 46 45	28 23,3	59	33 34	2 52 7	3	
☿ —— 23.		Noon.	68 5,0	55	33 26			
	21 31 6	22 2 46	55 19,2	56	33 52	3 23 46	3	
♃ —— 24.		Noon.	67 58,0	56	33 53¾			
	19 32 55	20 7 11	32 55,0	57	34 6	4 1 12	3	
♀ —— 25.		Noon.	68 5,0	60	34 7⅓			
♄ —— 26.		Noon.	68 23,0	59	34 9¾			
	4 12 3	4 58 0	19 43,0	58	34 7	6 54 34	6	Fine weather.
☉ —— 27.		Noon.	68 51,0	58	34 1¾			
	3 31 29	4 25 38	26 33,8	57	34 2	8 56 16	5	
	19 12 21	20 11 49	34 25,8	58	33 59	10 15 24	5	
☽ —— 28.		Noon.	69 14,0	64	33 59			
♂ —— 29.		Noon.	69 48,0	58	33 44½			
	2 57 40	4 12 17	29 42,1	59	33 42	14 1 25	6	
	19 19 48	20 40 31	40 51,0	57	32 55	15 32 30	5	
☿ —— 30.		Noon.	71 2,0	58	32 50⅓			
♃ —— 31.		Noon.	71 35,0	62	32 36½			
♀ Nov. 1.		Noon.	21 29,0	64	33 1¾			
♄ —— 2.		Noon.	71 10,0	63	33 39⅔			
	18 59 12	20 20 9	37 15,6	63	33 1	15 33 39	6	
☉ —— 3.		Noon.	72 16,0	64	32 52½			
	19 0 20	20 21 35	37 41,2	64½	33 5	15 40 28	6	
☽ —— 4.		Noon.	72 23,0	65	33 4			
♂ —— 5.		Noon.	72 31,0	66	33 14			
	18 26 25	19 46 8	30 35,1	63	34 14	15 18 31	5	
☿ —— 6.		Noon.	71 36,0	64	34 27			
♃ —— 7.		Noon.	72 7,0	66	34 13⅔			
	19 24 31	20 50 48	44 8,5	64	34 27	16 59 9	6	
♀ —— 8.		Noon.	72 11,0	64½	34 27			
	18 17 32	19 48 47	31 34,4	66	34 1	18 15 3	6	
♄ —— 9.		Noon.	72 55,0	62½	34 0			
	When we arrived at the Cape of Good Hope the Watch N° 2. gave the longitude about 36 miles too much, or East of the truth.							
☽ Dec. 2.		Noon.	78 1,0	69½	33 53			
♂ —— 3.		Noon.	77 23,0	64½	34 39⅓			
☿ —— 4.	18 21 11	20 2 57	37 13,7	57	38 30	20 52 15	6	
♃ —— 5.		Noon.	73 34,0	58	34 43½			
	18 58 39	20 49 34	46 21,2	61	38 53	23 14 0	3	
♀ —— 6.		Noon.	73 25,0	62	38 59⅔			
	19 20 36	21 18 35	51 45,1	60	39 43	25 4 30	6	

1776.	Time per Watch N° 2.	Apparent Time.	Observed Alt. of the ☉'s L. L.	Therm.	Latitude in.	Longitude in.	N° of Observations.	Remarks.
	H. ′ ″	H. ′ ″	° ′		° ′	° ′ ″		
♄ Dec. 7.		Noon.	72 40,0	61	39 51¾ S	E		Fine weather.
☉ —— 8.		Noon.	71 40,0	46	40 57½			
	17 27 40	19 43 30	33 48,8	52	42 2	29 41 33	6	
♂ —— 10.		Noon.	68 50,0	50½	43 58½			
	1 18 27	3 44 37	39 34,8	50	44 19	32 22 13	6	
☿ —— 11.		Noon.	67 16,0	41	45 37			
	17 10 4	19 51 43	35 23,8	36	46 2	36 22 37	6	
♃ —— 12.		Noon.	66 39,0	37	46 18⅔			
	1 25 33	4 11 6	34 54,0	38	46 37	37 22 54	4	
♀ —— 13.		Noon.	65 46,0	37	47 15⅓			
♄ —— 14.		Noon.	65 18,0	44	47 46¾			
	2 3 5	5 17 23	23 51,9	44	47 58	44 44 36	6	Hazy weather.
☉ —— 15.		Noon.	64 42,0	43	48 25⅔			
☽ —— 16.	16 2 59	19 55 26	36 1,9	42	48 31	54 30 10	6	
♂ —— 17.		Noon.	64 44,0	42½	48 28⅓			
	16 56 23	20 55 41	45 47,5	41	48 36	56 18 25	6	
☿ —— 18.		Noon.	64 37,0	41	48 36¾			
♃ —— 19.		Noon.	64 46,0	44	48 28¾			Cloudy weather.
♀ —— 20.		Noon.	64 45,0	44	48 30½			
		Noon.	64 52,0	59	48 34			
♂ —— 24.	23 22 53	4 10 5	35 8,2	61	48 34	68 51 34	6	
	0 23 8	5 10 29	25 9,3	61	48 37	68 52 31	6	
♀ —— 27.	Altitudes observed in Christmas Bay at the Islands of Desolation.							
	13 12 23	17 58 32	16 52,5	56	48 41	68 53 20	6	
	13 17 3	18 3 11	17 36,7	56		68 53 6	6	
♄ —— 28.		Noon.	64 51,7	57	48 41			
	16 8 21	20 54 49	45 26,6	57	48 46	69 3 55	6	
☉ —— 29.		Noon.	64 9,0	52	48 51			
	14 4 37	18 52 45	45 26,6	49	49 0	69 33 20	6	
♂ —— 31.		Noon.	63 44,0	39½	49 7½			
1777.								
☿ Jan. 1.	13 53 13	19 22 18	30 12,9	44	48 20	80 2 30	5	Fine weather.
♃ —— 2.		Noon.	64 22,0	44	48 19¼			
	13 55 1	19 35 5	32 26,2	47	48 17	83 7 10	6	
♀ —— 3.		Noon.	64 18,0	40	48 16½			
♀ —— 10.		Noon.	63 19,0	46	48 23⅓			
	22 55 40	6 8 25	14 38,6	52	48 17½	106 19 48	6	
	14 21 41	21 41 39	51 17,8	52	48 11	108 25 39	6	
♄ —— 11.		Noon.	63 21,0	53	48 12¼			
☽ —— 13.	14 11 42	21 59 2	54 6,7	54	47 22	115 26 42	5	
♂ —— 14.		Noon.	63 46,0	53	47 17			
	21 10 57	5 4 8	24 32,7	47	47 7	116 55 30	6	
	11 24 25	19 26 29	29 40,0	50	46 33	119 10 49	6	
☿ —— 15.		Noon.	64 30,0	51	46 21¾			

1777.	Time per Watch N° 2.	Apparent Time.	Observed Alt. of the ☉'s L. L.	Therm.	Latitude in.	Longitude in.	N° of Observations.	Remarks.
	H. ′ ″	H. ′ ″	° ′		° ′	° ′ ″		
♃ Jan. 16.		Noon.	65 30,0	55½	45 10⅔ S	E		Fine weather.
♀ —— 17.		Noon.	65 56,0	57	44 26¾			
	20 45 21	5 25 2	20 10,6	55	44 13	128 41 42	6	
♄ —— 18.		Noon.	65 57,0	56	44 20			
	19 46 32	4 38 56	28 15,3	57	44 13	131 54 58	6	Hazy weather.
	11 52 37	20 52 54	44 30,3	56	43 54	133 54 51	6	
☉ —— 19.		Noon.	66 14,0	46½	43 50⅓			
☽ —— 20.		Noon.	66 20,0	58	43 31⅓			
	9 58 4	19 25 15	28 49,2	56	43 21	140 42 30	6	
♂ —— 21.		Noon.	66 18,5	57	43 20			
	10 2 21	19 36 58	30 36,8	56	43 27	142 35 52	6	Fine weather.
☿ —— 22.		Noon.	65 57,0	60	43 28			
♃ —— 23.		Noon.	65 29,5	61	43 41⅓			
	18 56 31	4 40 34	27 14,1	60	43 45	144 59 36	6	
	9 21 51	19 12 37	25 54,8	60	43 47	146 40 58	6	
♀ —— 24.		Noon.	65 10,5	59	43 46			
	18 47 7	4 36 16	27 19,2	58	43 41	147 2 30	6	
♄ —— 25.		Noon.	65 0,0	62	43 41¾			
	18 51 36	4 45 21	26 3,8	61	43 32	147 27 37	6	
☽ —— 27.	10 48 37	20 42 28	41 24,0	66	43 20⅓	147 31 17	6	In Adventure Bay, Vandieman's Land.
♂ —— 28.		Noon.	64 34,1	69	43 20			
☿ —— 29.	10 30 50	20 24 35	37 52,7	69½		147 30 38	6	
♃ —— 30.		Noon.	64 2,5	69½	43 20½			
			At Sea.					
	9 21 4	19 20 44	26 11,8	57	43 26	148 59 6	6	
♀ —— 31.		Noon.	63 35,0	57½	43 31½			
♄ Feb. 1.		Noon.	62 35,0	57	44 14½			
☉ —— 2.		Noon.	61 52,0	56	44 40¼			
	17 52 29	4 17 14	29 37,7	61	44 43	155 15 1	6	Fine weather.
	10 7 35	20 39 46	39 23,0	61½	44 44	157 6 10	6	
☽ —— 3.		Noon.	61 32,5	64	44 42⅓			
♂ —— 4.	7 59 15	18 49 56	19 41,3	60	43 35	161 42 22	6	
☿ —— 5.		Noon.	62 7,0	60½	41 32			
	7 49 9	18 45 27	18 37,6	61	43 4	163 5 16	6	
♃ —— 6.		Noon.	62 26,5	62	42 54			
	8 20 46	19 24 40	25 36,6	62	42 29	164 58 12	6	
♀ —— 7.		Noon.	62 36,0	62½	42 25			
♄ —— 8.		Noon.	62 50,5	66½	41 52¾			
	8 29 33	19 50 34	30 7,2	62	41 5	169 11 30	6	
☉ —— 9.		Noon.	62 25,0	62½	40 59			
☽ —— 10.		Noon.	63 32,0	66	40 32¾			
	16 39 58	4 11 28	29 31,7	65½	40 32	171 45 55	6	
♂ —— 11.		Noon.	63 17,5	63	40 27⅔			
	16 22 0	4 0 31	31 23,5	63½	40 30	173 29 0	6	

1777.	Time per Watch N° 2.	Apparent Time.	Observed Alt. of the ☉'s L. L	Therm.	Latitude in.	Longitude in.	N° of Observations.	Remarks.
	H. ′ ″	H. ′ ″	° ′		° ′	° ′ ″		
☽ Feb. 24.	9 2 10	20 47 44	36 45,2	62	41 4½ S	174 5 12 E	6	Fine weather.
♂ —— 25.		Noon.	57 42,0	60	41 7⅓			
	7 32 0	19 18 51	20 20,6	51	41 21	174 21 43	6	
☿ —— 26.		Noon.	56 51,0	62	41 36			Off Cape Paliſſer.
	16 59 52	4 39 2	20 36,5	61½	41 40	174 54 58	6	
♃ —— 27.		Noon.	56 24,0	65	41 40½			
	7 33 42	19 31 19	22 8,9	66	41 27	176 53 7	6	
♀ —— 28.		Noon.	56 23,0	64	41 19			
♄ March 1.	7 33 22	19 42 12	23 25,2	64½	42 29	179 30 18	6	Fine weather.
☉ —— 2.		Noon.	54 25,0	63	42 31½			
	7 24 39	19 53 15	25 5,6	61	41 37	184 15 27	6	
♂ —— 4.		Noon.	54 47,0	60	41 23¾			
	7 25 45		27 31,2	62½	40 3	187 0 30	6	
☿ —— 5.		Noon.	55 55,5	60	39 52½			
	6 34 44	19 21 46	19 12,2	60½	39 18	188 40 7	6	
♃ —— 6.		Noon.	56 17,0	60	39 7⅔			
	7 26 49	20 22 0	30 14,5	66	37 14	190 36 15	6	
♀ —— 7.		Noon.	55 46,0	66	39 15¾			
☉ —— 9.		Noon.	54 46,5	68	39 28½			
	6 26 10	19 39 23	21 31,3	68	39 23	194 48 30	6	
☽ —— 10.		Noon.	54 29,5	69	39 22			
	7 11 5	20 27 51	30 7,4	68	39 27	195 50 0	6	
♂ —— 11.		Noon.	54 0,0	68½	39 28			
☿ —— 12.		Noon.	54 10,0	65½	39 4½			
♀ —— 14.	8 58 6	22 28 36	51 20,2	61	34 8	198 34 3	6	
♄ —— 15.		Noon.	67 47,5	69	34 6⅓			
	12 14 33	3 42 38	29 1,1	67	33 53	198 31 13	6	
☉ —— 16.		Noon.	57 51,5	72	33 38½			
	14 6 4	3 37 32	29 52,0	72½	33 36	198 40 33	6	
	7 16 44	20 48 44	34 47,7	72	33 26	198 43 48	6	
☽ —— 17.		Noon.	57 43,5	72	33 23⅓			
	6 22 45	17 58 0	24 59,6	72½	32 18	199 25 49	6	
♂ —— 18.		Noon.	58 40,0	70	32 2¾			
☿ —— 19.		Noon.	59 49,0	72	30 30			
	6 24 18	20 4 46	26 46,3	70	29 19	200 36 12	6	
♃ —— 20.		Noon.	60 52,5	73½	29 3			
	6 57 6	20 39 5	34 5,5	71	27 58	200 45 25	6	
♀ —— 21.		Noon.	61 44,0	68	27 47¾			
	5 41 4	19 23 49	18 9,0	73	26 56	200 50 36	6	
♄ —— 22.		Noon.	62 19,5	75	26 48⅔			
	6 10 34	19 53 47	24 39,4	72	26 8	200 50 19	6	
☉ —— 23.		Noon.	62 43,0	78	26 1½			
	5 36 25	19 19 51	17 9,2	73	25 31	200 46 20	6	

The Watch went down, having forgot to wind it up; wound it up, and ſet it a-going by giving it a ſmall circular motion to make the balance vibrate.

1777.	Time per Watch N° 2.	Apparent Time.	Observed Alt. of the ☉'s L. L.	Therm.	Latitude in.	Longitude in.	N° of Observations.	Remarks.
	H. ′ ″	H. ′ ″	° ′		° ′	° ′ ″		
☉ Mar. 23.	I determined its error from mean time at Greenwich by assuming the longitude of the ship 13^h 24′ 30″ East in time—as determined from a great number of lunar observations—and the rate used is the same as before.							
♂ —— 25.		Noon.	63 27,5	79	24 29¼ S	E		Fine weather.
	4 11 56	19 24 53	18 14,7	75	23 47	201 2 48	6	
☿ —— 26.		Noon.	63 55,0	76	23 39¼			
	4 8 9	19 21 14	17 20,5	81	23 20	200 58 43	6	
♃ —— 27.		Noon.	63 55,0	83	23 15½			
	4 23 53	19 36 7	20 39,8	81	22 47	200 40 53	6	
♀ —— 28.		Noon.	64 4,5	83	22 42⅔			
	5 13 58	20 28 20	22 7,6	79	22 21	201 3 21	6	
♄ —— 29.		Noon.	64 7,5	79½	22 16¼			
☉ —— 30.		Noon.	64 8,0	80	21 52¼			
	3 39 39	18 55 30	11 19,4	81	20 43	201 11 49	6	
☽ —— 31.		Noon.	65 14,0	81	20 23⅓			
	5 9 10	20 24 30	31 30,5	81½	20 1	200 56 51	6	
♂ April 1.		Noon.	65 23,5	82½	19 50¼			
	4 28 2	19 44 0	22 14,4	83	20 2	200 59 7	6	
☿ —— 2.		Noon.	64 48,9	84½	20 1¾			
	4 23 12	19 39 31	21 3,7	85	20 2	200 57 39	6	
♃ —— 3.		Noon.	64 26,2	84	20 1⅓			
	4 10 6	19 26 28	17 56,7	81	20 2	200 51 37	6	Cloudy.
♀ —— 4.		Noon.	64 15,5	83	19 49⅓			
♄ —— 5.		Noon.	64 22,0	82½	19 20¾			
	4 23 40	19 38 9	20 30,0	82	19 14	200 11 54	6	
☉ —— 6.		Noon.	64 6,0	83	19 13½			
	4 20 26	19 31 28	18 45,7	81	19 30	199 10 57	6	
☽ —— 7.		Noon.	64 27,0	83	19 29			
	4 25 35	19 34 21	19 21,2	81½	19 11	198 30 24	6	
♂ —— 8.		Noon.	63 26,0	84	19 8¼			
	5 45 32	20 53 9	36 40,9	81	19 0	198 6 13	6	
☿ —— 9.		Noon.	63 15,0	83	18 56¾			
♃ —— 10.		Noon.	63 12,0	81	18 37⅔			
♀ —— 11.		Noon.	63 7,0	80½	18 20½			
	4 35 26	19 36 15	19 27,7	80	18 13	196 4 51	6	
♄ —— 12.		Noon.	62 58,0	84	18 7½			
	6 28 8	21 27 29	43 22,0	78	18 11	195 35 54	6	
☉ —— 13.		Noon.	62 35,5	82½	18 8			
☽ —— 14.		Noon.	62 12,5	80	18 9½			
	4 29 49	19 28 58	17 25,5	80	18 7	195 20 42	6	
☿ —— 16.		Noon.	61 33,0	83	18 6			
	12 38 6	3 37 9	29 12,9	79½	18 8	195 10 57	6	
♀ —— 18.		Noon.	60 47,0	79	18 9¼			
	6 40 21	21 34 51	43 40,3	80	17 58	193 46 20	6	Fine weather.
[illegible] —— 19.		Noon.	60 40,0	81	17 55¾			

1777.	Time per Watch N° 2.	Apparent Time.	Observed Alt. of the ☉'s L. L.	Therm.	Latitude in.	Longitude in.	N° of Observations.	Remarks.
	H. ′ ″	H. ′ ″	° ′		° ′	° ′ ″		
♄ April 19.	6 51 8	21 41 46	44 38,0	80	18 7 S	192 42 40 E	6	Fine weather.
☉ —— 20.		Noon.	60 8,0	82	18 7¼			
☉ —— 27.		Noon.	55 19,0	77½	20 36¾			
☽ —— 28.		Noon.	55 11,0	81½	20 26¾			
☽ May 5.	At Annamocka the Watch was 14ʰ 11′ 35″,3 too slow for mean time, and its rate 0″,145 per day getting on mean time.							
♂ —— 13.	13 39 19	3 54 50	20 29,8	79½	20 13	184 58 45	6	
☿ —— 14.		Noon.	50 59,5	79	20 9¾			
	14 19 33	4 34 50	12 12,0	78	20 0	184 56 37	6	
♃ —— 15.		Noon.	51 4,0	79½	19 51			
	13 24 32	3 40 44	23 18,0	78½	19 46	185 11 24	6	
♀ —— 16.		Noon.	51 1,0	79½	19 39¾			
	13 49 38	4 6 21	17 58,2	78	19 50	185 20 58	6	
☉ —— 18.		Noon.	50 28,0	79	19 46			
	13 16 39	3 34 3	24 15,7	79½	19 46	185 31 7	6	
☽ —— 19.	5 51 5	20 8 31	20 37,3	79	19 46	185 30 51	6	
☿ —— 21.	13 52 16	4 9 25	16 52,0	79½	19 46	185 26 57	6	
	6 26 36	20 43 51	27 15,0	78½	19 46	185 29 36	6	
♃ —— 22.		Noon.	49 38,0	79½	19 45¾			
♀ —— 23.		Noon.	49 26,0	79	19 46¼			At Apie.
♄ —— 24.		Noon.	49 16,0	79½	19 45			
☉ —— 25.		Noon.	49 4,5	79	19 46			
☽ —— 26.		Noon.	48 54,0	79½	19 45½			
	Mean Latitude 19° 45′¾							
♄ —— 24.	6 16 42	20 33 31	24 58,0	79		185 26 55	6	
☉ —— 25.	6 11 28	20 28 22	23 53 1	78		185 29 39	6	
	A mean of all the Longitudes is 185° 29′ 12″, or 29′ 12″ East of Annamocka.							
☿ —— 28.	6 42 39	20 58 44	29 8,7	79	19 51	185 21 24	6	
♀ —— 30.		Noon.	48 10,5	81½	19 50⅓			
♄ —— 31.		Noon.	47 52,0	79	20 0			
☉ June 1.	6 16 30	20 30 30	23 36,9	79½	19 53	184 58 30	6	
☽ —— 2.		Noon.	47 42,5	78	19 53⅓			
	5 58 51	20 12 43	20 8,0	79	19 53	185 5 18	6	
♂ —— 3.		Noon.	47 34,5	76	19 53¾			
♀ —— 13.		Noon.	44 4,5	77	21 7			
	A mean of 23 days observations at Tongotaboo give the rate of the Watch 0″,129 getting on mean time—and July 5th it was 14ʰ 10′ 3″,7 too slow for mean time there.							

1777.	Time per Watch N° 2.	Apparent Time.	Observed Alt. of the ☉'s L. L.	Therm.	Latitude in.	Longitude in.	N° of Observations.	Remarks.
	H. ′ ″	H. ′ ″	° ′		° ′	° ′ ″		
♀ July 18.		Noon.	46 41,0	77	22 −4⅔ S	E		Fine weather.
	5 25 15	19 33 12	11 43,0	78	22 25	185 40 4	6	
♄ —— 19.		Noon.	46 28,0	77	22 28⅔			
☉ —— 20.		Noon.	46 39,0	76	22 28¾			
	6 36 12	20 48 31	26 5,7	69	22 52	186 47 15	6	
☽ —— 21.		Noon.	46 20,0	71	22 58⅔			
♀ —— 25.		Noon.	44 21,5	68	25 45¾			
	5 1 35	19 39 20	11 55,3	72	26 4	193 19 20	6	
♄ —— 26.		Noon.	44 13,0	77	26 7⅓			
	4 48 7	19 31 4	10 7,7	76	26 42	194 29 27	6	
☽ —— 28.		Noon.	43 9,0	68	27 38½			
☿ —— 30.		Noon.	43 12,0	69	28 4			
	5 57 24	21 4 5	26 55,6	68	27 59	200 24 15	6	
♃ —— 31.		Noon.	43 32,0	60	27 58½			
	5 5 40	20 17 45	19 7,1	61	27 51	201 44 27	6	
♀ Aug. 1.		Noon.	43 57,0	63	27 48⅓			
♄ —— 2.	5 6 31	20 27 44	21 18,5	66	27 44	205 59 40	6	
☉ —— 3.		Noon.	44 29,0	68	27 47			
☽ —— 4.		Noon.	44 56,5	66	27 35⅙			
♂ —— 5.		Noon.	44 56,0	68	26 51½			
	12 15 17	3 47 21	19 30,2	67½	26 44	206 39 27	6	
☿ —— 6.		Noon.	47 8,0	67½	25 56			
	12 44 24	4 21 45	13 22,9	66	25 45	207 57 20	6	
	4 9 47	19 50 49	16 12,2	66	25 17	208 51 30	6	
♃ —— 7.		Noon.	48 12,0	67	25 8⅔			
	3 58 53	19 44 53	15 41,9	66½	24 6	210 4 37	6	
♀ —— 8.		Noon.	49 42,0	67	23 55½			
	11 38 34	3 26 14	25 33,7	67	23 48	210 28 48	6	
	4 5 25	19 54 1	18 2,2	67½	23 22	210 41 30	6	
♄ —— 9.		Noon.	50 45,0	68	23 9½			
☉ —— 10.		Noon.	53 0,0	69½	21 12			
	3 34 12	19 16 30	11 54,9	68½	19 35	211 32 48	6	Moderate weather.
☽ —— 11.		Noon.	55 11,0	77	19 18⅔			
	3 26 53	19 19 38	13 17,5	73	17 57	211 37 20	6	

While at Otaheite and the Society Islands the Watch N° 2. was getting 2″,69 per day on mean time, and was 15^h 41′ 1″,1 too slow for mean time at Ulietea, the 26th of Nov. at noon there.

☽ Dec. 8.	3 30 15	19 14 54	22 51,7	81	16 0	207 41 24	6	
♂ —— 9.		Noon.	82 40,0	83	15 43½			
	3 25 27	19 8 53	21 6,7	81	14 46	207 30 30	6	
☿ —— 10.		Noon.	81 24,0	82	14 33½			
♃ —— 11.		Noon.	80 30,0	81½	13 44⅔			
	3 26 14	19 4 14	19 31,0	80	13 8	206 24 0	6	Fine weather.
♀ —— 12.		Noon.	79 41,0	82	13 0			

1777.	Time per Watch N° 2.	Apparent Time.	Observed Alt. of the ☉'s L. L.	Therm.	Latitude in.	Longitude in.	N° of Observations.	Remarks.
	H. ′ ″	H. ′ ″	° ′		° ′	° ′ ″		
♀ Dec. 12.	3 53 14	19 28 10	24 46,0	81½	12 27 S	205 45 46 E	6	Fine weather.
♄ —— 13.		Noon.	78 53,0	82	12 16⅔			
	3 40 54	19 14 29	21 14,2	82½	11 18	205 26 0	6	
☉ —— 14.		Noon.	77 48,5	73	11 3¼			
	3 53 48	19 25 22	23 21,3	81	12 16	205 12 40	6	
☽ —— 15.	3 36 27	19 6 20	18 35,7	81	9 9	204 53 9	6	
♂ —— 16.		Noon.	75 22,5	82	8 56			
	4 23 10	19 50 28	28 13,3	81	7 52	204 16 0	6	
☿ —— 17.		Noon.	74 2,0	82	7 37¾			
♃ —— 18.		Noon.	72 46,5	82	6 24⅓			
	3 46 19	19 11 6	18 11,5	81	5 12	204 0 36	6	
♀ —— 19.		Noon.	71 15,5	82	4 54¾			
	3 54 44	19 16 59	19 1,4	80	3 54	203 40 43	6	
♄ —— 20.		Noon.	71 15,5	80	3 33⅓			
	4 33 19	19 52 54	26 33,1	80	2 19	202 59 0	6	
☉ —— 21.		Noon.	68 23,0	80	2 3¼			
	4 23 7	19 40 52	23 12,7	78	0 53	202 40 0	6	
☽ —— 22.		Noon.	66 54,0	79	0 34¼			
	4 9 2	19 24 43	19 0,3	77	0 26 N	202 16 40	6	
♂ —— 23.		Noon.	65 37,0	77	0 42¾			
	4 10 41	19 24 44	18 25,3	78	1 49	202 10 0	6	
☿ —— 24.		Noon.	64 19,0	78	2 2			
♃ —— 25.		Noon.	115 4,0	79	1 52	Back Obs.		
♀ —— 26.		Noon.	115 7,5	79	1 56⅔	Back Obs.		
			64 27,5		1 57	Fore Obs.		
	4 12 48	19 25 58	18 40,0	79	1 57	202 10 52	18	
♄ —— 27		Noon.	115 6,5	80	1 58	Back Obs.		At Turtle Island.
			64 29,0	79	1 56¾	Fore Obs.		
☉ —— 28.	4 17 36	19 39 29	19 29,0	79	1 57	202 10 30	18	
☽ —— 29.		Noon.	64 35,0	79	1 57¼			
			115 0,0		1 56⅓			
♂ —— 30	4 11 54	19 22 58	18 1,7	79		202 10 30	18	
☿ —— 31.	5 1 23	20 11 54	28 57,8	78		202 10 21	18	

A mean of all the latitudes is 1° 57′ 3″ North.
A mean of the longitudes by the Watch is = 202° 10′ 28″ East, or 157° 49′ 32″ West.

Observations of an eclipse of the Sun at Turtle Island, Lat 1° 57′ N.

☽ Dec. 29. Early in the morning I went on shore in company with Capt. Cooke and Lieut. King; the sky was cloudy, so that we saw the Sun at times only.

At 21ʰ 30′ apparent time, when the clouds cleared away, I found the eclipse was begun some time, I suppose three or four minutes.

1777.	Time per Watch. H. ′ ″	Apparent Time. H. ′ ″	Measures on the Micrometer Scale. Inches. Non.	Minutes, Seconds, and Thirds. ′ ″ ‴	Remarks.
☽ Dec. 29.	The beginning being loſt, I applied the Micrometer to my Teleſcope, and obſerved the following meaſures.				
	7 47 56	21 36 3	2,3 +16	15 9 24	Diſtances of the horns of the uneclipſed part—or chord lines.
	49 35	37 42	2,3½ +20	15 32 10	
	50 49	38 56	2,4½ +00	15 55 35	
	52 29	40 36	2,5 +16½	16 27 48	
	54 18	42 25	2,5½ +22	16 51 43	
	55 27	43 34	2,6 +20½	17 9 54	
	8 5 47	53 54	3,9½ +17	25 53 48	Verſed ſines of the enlightened part.
	6 56	55 3	3,9½ + 4	43 40	
	8 14	56 21	3,9 +15	32 35	
	9 44	57 51	3,9 + 3	23 14	
	11 6	59 13	3,8½ +12	10 54	
	12 11	22 0 18	3,8 +23	24 59 49	
	13 45	1 51	3,8 +12	51 15	
	14 53	2 59	3,8 + 4	45 1	
	16 0	4 6	3,7½ +16	35 1	
	17 2	5 8	3,7½ + 8	28 47	
	18 40	6 46	3,7 +22	20 2	
	20 15	8 21	3,7 + 9	9 35	
	25 40	13 46	3,6 +20	23 39 29	
	26 55	15 1	3,6 +14	34 48	
	28 40	16 46	3,6 + 3	26 14	
	30 40	18 46	3,5½ +20	21 31	
	31 58	20 4	3,5½ +11	13 7	
	33 27	21 33	3,5½ + 6	9 13	
	34 54	23 0	3,5½ + 2	6 29	
	36 41	24 46	3,5 +18	22 58 35	
	38 5	26 11	3,5 + 9	51 55	
	39 46	27 52	3,5 + 6	49 34	
	41 16	29 22	3,5 + 0	44 54	
	43 2	31 8	3,4½ +18	39 34	
	44 52	32 58	3,4½ +14	36 27	
	46 22	34 28	3,4½ +12	34 54	
	47 40	35 46	3,4½ + 9	32 34	
	50 4	38 10	3,4½ + 7	30 59	
	51 15	39 21	3,4½ + 6	30 13	
	52 45	40 50	3,4½ + 5	29 27	
	54 20	42 25	3,4½ + 5	29 27	
	55 57	44 2	3,4½ + 5	29 27	
	57 35	45 40	3,4½ + 6	30 13	
	9 1 24	49 29	3,4½ + 9	32 34	
	3 7	51 12	3,4½ +13	35 41	
	5 35	23 53 40	3,4½ +18	39 34	
	18 1	6 6	23,5 +24	23 36 36	
	20 4	8 9	3,5½ +13	14 41	

1777.	Time per Watch N° 1.	Apparent Time.	Measures on the Micrometer Scale.	Minutes, Seconds, and Thirds.	Remarks.
	H. ′ ″	H. ′ ″	Inches. Non.	′ ″ ‴	
☽ Dec. 29.	9 21 43	23 9 48	3,5½ + 19	23 19 21	Verſed ſines of the enlightened part.
	24 27	12 32	3,6 + 7	29 21	
	25 45	13 50	3,6 + 16	36 22	
	27 22	15 27	3,6½ + 1	44 20	
	29 16	17 21	3,6½ + 14	54 27	
	43 9	31 13	3,8½ + 6	25 6 13	
	44 43	32 47	3,8½ + 21	17 35	
	54 54	42 58	3,8½ + 2	18 33 31	Air very hazy. Diſtances of horns of the uneclipſed part, or chord lines.
	55 45	43 49	3,8 + 18	18 25 57	
	59 49	47 53	3,7½ + 5	17 56 29	
	10 1 0	49 4	3,7 + 5	17 36 50	
	2 36	50 40	3,6½ + 0	17 13 35	
	3 47	57 41	3,6 + 5	16 58 14	
	11 24	59 26	2,3½ + 4	15 19 42	Air very clear. Diſtances of horns of the uneclipſed part, or chord lines.
	12 36	0 0 40	2,3 + 4	15 0 3	
	13 32	1 36	2,2½ + 4	14 40 42	
☉ Dec. 30.	14 35	2 39	2,2 + 21	14 34 18	
	15 37	3 41	2,1½ + 22	14 15 43	
	16 40	4 44	2,1 + 15	13 50 37	

At the end the air was very clear, ſo that it ſeemed certain to a few ſeconds. The times were as follow;

Time per Watch H. ′ ″	Ap. Time. H. ′ ″	
10 37 35	0 25 38¾	Capain Cooke.
10 37 53	0 25 56¾	Lieutenant King.
10 37 55	0 25 58¾	William Bayly.

Captain Cooke uſed an Achromatic Teleſcope of 3¼ feet focus by Dollond, magnifying power 90 times.—Lieutenant King uſed a 3 feet Gregorian Reflector by Bird, magnifying power about 90 times.—My Teleſcope was an Achromatic one by Dollond of 3¼ feet focus, magnifying power 90 times.

In order to determine the time Mr. King's Watch was ſet exactly with the Time-keeper N° 1. at 4^h 20′ per Do.—and a careful perſon counted the ſeconds ſhewn by Mr. King's Watch during the time of obſervation. At our return on board the Watch was compared with the Time-keper at 12^h 40′ per Do. the Watch was 10¼ ſeconds faſt; during an interval of 8^h 20′.—The Time-keeper was loſing 1″,7 per day on mean time.

Some time after the following obſervations were taken for the Time-keeper.

Time per Time-keep. H. ′ ″	Alt. of ☉'s L. L. ° ′ ″		
14 46 6	18 39 50	Error of Sextant + 2′ 47″	From theſe, the Time-keeper was 13^h 47′ 56″,7 ſlow for app. time, from whence, and the above, the app. times of the whole were deduced.
46 34	32 15		
46 50	28 0		
47 10	24 15		
47 26	20 0		
48 6	12 0		

1778.	Time per Watch N° 2.	Apparent Time.	Observed Alt. of the ☉'s L. L.	Therm.	Latitude in.	Longitude in.	N° of Observations.	Remarks.
	H. ′ ″	H. ′ ″	° ′		° ′	° ′ ″		
	As soon as the eclipse was ended, I measured the sun's horizontal diameter ten times, a mean of which is $=4{,}9\frac{1}{2}+\overset{\text{Non.}}{24}+1$ error—reduced is 32′ 29″,8. All the measures of the micrometer scale were reduced to minutes, seconds, and thirds by a table of its values, as determined at Tongotaboo. W. BAYLY.							
♀ Jan. 2.		Noon.	64 26,8	80	2 $24\frac{1}{3}$ N	E		Fine weather.
	4 30 20	19 39 15	21 14,7	79	3 5	202 2 12	6	
♄ —— 3.		Noon.	63 37,0	$79\frac{1}{2}$	3 $19\frac{1}{6}$			
	4 41 18	19 50 26	23 23,4	$79\frac{1}{2}$	3 52	202 13 15	6	
☉ —— 4.		Noon.	62 57,0	81	4 $5\frac{1}{2}$			
	4 58 8	20 7 37	26 49,8	77	4 42	202 25 36	6	
☽ —— 5.		Noon.	62 11,0	80	4 58			
	4 22 50	19 32 32	18 42,0	78	5 38	202 36 4	6	
♂ —— 6.		Noon.	61 23,0	80	5 53			
☿ —— 7.	4 5 0	19 20 46	14 17,7	75	7 35	204 21 15	6	
♃ —— 8.		Noon.	59 45,0	75	7 $46\frac{1}{4}$			
	4 8 42	19 25 12	16 8,2	78	8 0	204 39 8	6	
♀ —— 9.		Noon.	59 24,0	78	8 $11\frac{1}{3}$			
	9 30 39	19 45 57	20 11,9	77	9 16	204 27 51	6	
♄ —— 10.		Noon.	58 17,5	$78\frac{1}{2}$	9 $39\frac{1}{2}$			
	4 21 26	19 36 11	17 33,0	78	10 27	204 26 30	6	
☉ —— 11.		Noon.	57 16,5	79	10 $41\frac{1}{2}$			
	5 18 32	20 30 12	28 17,7	79	12 1	203 41 15	6	
☽ —— 12.		Noon.	55 48,5	78	12 $18\frac{1}{4}$			
	5 9 12	20 15 53	24 24,2	77	13 56	202 37 45	6	
♂ —— 13.		Noon.	54 6,0	$77\frac{1}{2}$	14 $10\frac{3}{4}$			
	5 23 2	20 25 30	25 30,6	77	15 39	201 41 0	6	
☿ —— 14.		Noon.	52 31,0	77	15 $56\frac{1}{6}$			
	5 17 16	20 16 22	22 49,7	76	17 23	200 56 25	6	
♃ —— 15.		Noon.	50 56,0	77	17 43			
	4 47 8	19 44 45	15 48,7	76	18 43	200 36 39	6	
♀ —— 16.		Noon.	49 47,5	77	19 $2\frac{3}{4}$			
	4 30 34	19 26 53	11 33,9	76	20 5	200 26 0	6	
♄ —— 17.		Noon.	48 36,0	77	20 26			
	4 50 56	19 46 33	15 11,0	76	21 8	200 20 57	6	
☉ —— 18.		Noon.	48 1,0	77	21 13			
	4 32 56	19 27 53	11 16,0	76	21 35	200 15 55	6	
☽ —— 19.		Noon.	47 38,5	$77\frac{1}{2}$	21 $47\frac{3}{4}$			
	4 58 9	19 51 21	15 59,3	76	21 56	199 54 52	6	
♂ —— 20.		Noon.	47 45,0	76	21 54			
	5 42 42	20 35 31	24 38,6	$75\frac{1}{2}$	21 56	199 54 7	6	
☿ —— 21.		Noon.	47 46,0	76	21 $56\frac{1}{4}$			Cloudy weather.
♄ —— 24.		Noon.	48 58,0	$75\frac{1}{2}$	21 $49\frac{1}{2}$			
☉ —— 25.		Noon.	48 58,0	$75\frac{1}{2}$	21 $49\frac{1}{2}$			
☽ —— 26.		Noon.	49 27,0	76	21 $35\frac{3}{4}$			

1778.	Time per Watch N° 2.	Apparent Time.	Observed Alt. of the ☉'s L. L.	Therm.	Latitude in.	Longitude in.	N° of Observations.	Remarks.
	H. ′ ″	H. ′ ″	° ′		° ′	° ′ ″		
♂ Jan. 27.		Noon.	49 47,0	76	21 31 N	E		Cloudy weather.
☿ —— 28.		Noon.	50 15,0	75½	21 18⅔			
♃ —— 29.		Noon.	50 4,0	76	21 45⅓			
♀ —— 31.		Noon.	50 35,0	75½	21 47½			
☽ Feb. 2.		Noon.	51 8,0	75½	21 48⅔			
♂ —— 3.	13 24 23	4 11 50	17 3,0	76	21 56	199 17 24	6	Fine weather.
		Noon.	50 11,0	75½	23 3⅓			
☿ —— 4.	4 59 59	19 46 47	15 58,5	76	24 14	199 11 22	6	
		Noon.	49 1,5	75	24 31⅓			
♃ —— 5.	13 17 25	4 3 53	17 40,0	73	24 48	199 7 0	3	
	5 0 19	19 47 31	15 32,8	73	25 52	199 23 39	6	
		Noon.	47 43,0	74	26 7½			
♀ —— 6.	5 14 53	20 4 35	18 15,6	73½	27 34	199 58 15	6	
		Noon.	46 28,0	70	27 41			
♄ —— 7.	4 51 57	19 40 56	23 21,4	69	28 37	199 48 52	6	
		Noon.	45 32,0	70	28 55⅓			
☉ —— 8.	5 26 9	20 17 54	19 53,2	69	30 2	200 31 45	6	
		Noon.	44 28,0	70	30 18⅙			
☽ —— 9.	4 47 20	19 42 21	13 21,2	69	30 54	201 21 55	6	
		Noon.	44 6,5	71	30 58½			
♂ —— 10.	5 0 36	20 0 47	16 32,3	61	31 14	202 41 0	6	
☿ —— 11.		Noon.	44 6,5	62	31 18			
		Noon.	44 49,0	57	30 55			
♃ —— 12.	5 48 35	21 3 46	28 51,0	57	30 0	206 26 0	6	
		Noon.	45 56,0	60	30 7½			
♀ —— 13.		Noon.	45 5,5	60	31 17½			
♄ —— 14.	5 24 1	20 36 57	23 49,3	60½	31 30	205 53 0	6	
		Noon.	45 12,0	61½	31 32⅔			
☉ —— 15.	5 17 52	20 28 43	22 11,0	59	32 15	205 21 22	6	
		Noon.	44 38,0	60	32 27½			
☽ —— 16.		Noon.	43 41,0	59	33 44⅓			
♂ —— 17.	6 5 14	21 17 59	29 20,2	56	34 39	205 49 15	6	
		Noon.	42 54,0	57	34 52⅙			
☿ —— 18.	4 15 5	19 28 22	10 5,6	54	36 7	205 56 34	6	
		Noon.	41 47,0	59	36 20			
♃ —— 19.	4 23 52	19 37 29	11 31,6	58	37 15	206 0 48	6	
		Noon.	41 05,0	54½	37 23⅓			
♀ —— 20.	4 27 30	19 46 8	13 1,9	54	37 57	207 15 9	6	
♄ —— 21.		Noon.	40 44,0	58	38 5½			
		Noon.	40 4,0	55	39 7½			
☉ —— 22.	3 52 5	19 28 46	9 37,5	52	40 3	211 48 20	6	
		Noon.	39 15,5	56	40 17⅓			
☽ —— 23.	3 43 58	19 33 5	10 14,2	54	41 3	214 48 25	6	
		Noon.	38 44,0	53	41 10½			
♂ —— 24.		Noon.	38 35,0	52	41 41½			
	11 21 13	3 21 47	20 52,2	51	41 45	217 37 48	6	

1778.	Time per Watch N° 1.	Apparent Time.	Observed Alt. of the ☉'s L.L.	Therm.	Latitude in.	Longitude in.	N° of Observations.	Remarks.
	H. ′ ″	H. ′ ″	° ′	°	° ′	° ′ ″		
☿ Feb. 25.		Noon.	38 9,0	50	42 29⅔ N	E		Fine weather.
	4 18 38	20 37 4	20 24,5	50½	43 7	222 2 48	6	
♃ —— 26.		Noon.	37 45,0	50	43 15⅚			
♄ —— 28.		Noon.	37 26,5	51	44 19⅔			
	10 4 49	2 43 38	25 44,0	50	44 26	227 3 25	6	
	4 14 32	20 58 12	23 49,7	49½	44 47	228 14 49	6	
☉ May 1.		Noon.	37 17,0	51½	44 51½			Squally weather.
	4 9 29	20 54 3	23 2,0	51	44 51	228 25 20	6	
☽ —— 2.		Noon.	37 39,0	51	44 52⅓			
	3 10 21	19 57 41	15 0,6	49	44 42	229 4 45	6	
♂ —— 3.		Noon.	38 20,0	48½	44 34⅙			
	2 51 0	19 46 27	13 42,0	46	44 7	231 3 45	6	
☿ —— 4.		Noon.	39 16,0	47	44 1⅙			
	10 36 23	3 35 17	19 58,4	48	43 57	231 54 43	6	
♀ —— 6.		Noon.	39 52,0	49	46 10⅔			
	2 23 40	19 38 27	13 6,7	49	44 30	235 43 51	6	
♄ —— 7.		Noon.	39 56,0	49	44 30⅙			
	3 28 47	20 44 6	23 42,4	43	44 30	235 49 48	6	
☉ —— 8.		Noon.	40 26,0	45	44 23⅔			
	10 3 42	3 18 52	23 32,5	44½	44 9	235 46 54	6	
	3 5 26	20 18 34	20 8,6	44	43 50	235 13 52	6	
♂ —— 10.	3 35 18	20 51 28	26 16,3	38	43 41	235 52 46	6	
☿ —— 11.		Noon.	42 21,0	39	43 39⅙			
♃ —— 12.		Noon.	43 20,0	37	43 3⅔			
♀ —— 13.		Noon.	44 0,0	38	42 47¼			
	10 47 4	3 56 54	19 41,0	41	42 51	234 10 0	6	
	3 23 13	20 33 28	24 37,0	40	43 17	234 13 10	6	
♄ —— 14.		Noon.	43 57,0	42	43 13¾			
	4 20 8	21 23 41	32 39,7	44	42 47	232 28 30	6	
☉ —— 15.		Noon.	44 51,0	46	42 43⅔			
☽ —— 16.		Noon.	44 56,0	48	43 2¼			
	11 10 31	4 18 10	16 50,0	47	43 11	233 25 3	6	
	2 56 12	20 6 56	21 0,7	46	43 48	234 8 58	6	
♂ —— 17.		Noon.	44 23,5	46½	43 58⅓			
☿ —— 18.		Noon.	43 56,0	47	44 49½			
	9 57 54	3 10 27	27 36,5	46	44 45	234 31 15	6	
	2 34 44	19 46 38	17 53,3	47½	44 44	234 18 31	6	
♃ —— 19.		Noon.	44 14,0	52	44 55⅔			
	2 52 57	20 7 26	21 20,6	47	45 23	234 53 21	6	
♀ —— 20.		Noon.	44 4,5	50	45 28½			
	1 54 19	19 8 55	11 53,7	45	45 37	234 51 3	6	
♄ —— 21.		Noon.	44 8,0	48	45 49			
	2 49 26	20 8 59	21 31,2	41	47 1	236 1 30	6	
☉ —— 22.		Noon.	42 0,0	42	47 17¼			
	10 11 58	3 32 0	24 17,2	44	47 31	236 7 32	6	
☽ —— 23.	2 31 56	19 47 41	48 37,7	43	47 29	234 56 20	6	

1778.	Time per Watch N° 1.	Apparent Time.	Observed Alt. of the ☉'s L L.	Therm.	Latitude in.	Longitude in.	N° of Observations	Remarks.
	H. ′ ″	H. ′ ″	° ′	°	° ′	° ′ ″		
♂ Mar. 24.		Noon.	43 31,0	45½	47 37 N	E		Squally weather.
	11 7 6	4 24 29	16 42,2	42	47 46	235 19 20	6	Fine weather.
☿ —— 25.	3 19 40	20 31 21	25 37,2	44	48 15	233 48 22	6	
♃ —— 26.		Noon.	43 38,0	45	48 17⅓			
	11 7 32	4 23 40	17 17,6	44	48 16	233 35 15	6	
	3 12 18	20 20 37	24 25,8	44	48 2	232 52 22	6	
♀ —— 27.		Noon.	44 23,0	45	47 55⅔			
	11 33 44	4 42 40	14 33,7	44	48 7	233 0 22	6	
	2 45 14	19 57 32	20 55,4	45	48 49	233 48 0	6	
♄ —— 28.		Noon.	43 42,0	47	49 00			
	3 48 30	21 0 26	30 4,3	46	49 19	233 38 21	6	
☉ —— 29.		Noon.	43 38,0	45	49 27½			
	10 3 12	3 18 5	27 30,6	44	49 34	234 21 36	6	

The Watch N° 2. gave the longitude 1° 21′⅓ East of the truth when we arrived at King George's Sound.

During our stay there it was losing 9″,187 per day on mean time, and was 17ʰ 24′ 41″,5 too slow for mean time the 23d of April at noon. The longitude of King George's Sound in time is = 15ʰ 33′ 47,″3 East of Greenwich.

☉ April 26.	2 14 28	19 37 23	25 58,0	47	49 14	214 14 46	6	
☽ —— 27.		Noon.	53 55,0	44	49 37¾			Very hazy.
	2 14 27	19 27 55	24 38,5	46	49 38	229 48 12	6	
♂ —— 28.		Noon.	53 55,0	47	49 57⅓			
	2 54 43	19 58 27	29 16,2	43½	51 32	227 17 22	6	Fine weather.
☿ —— 29.		Noon.	52 18,0	44½	51 53⅓			
	3 28 56	20 25 4	32 52,6	43	53 10	225 18 48	6	
♃ —— 30.		Noon.	51 10,0	45½	53 20			
	2 41 26	19 35 32	25 45,8	45	54 26	224 41 43	6	
♀ May 1.		Noon.	50 6,0	46	54 42¾			
	11 26 55	4 20 53	26 13,6	44½	55 6	224 47 31	6	
♄ —— 2.		Noon.	48 15,0	45	56 51			
	3 7 16	19 52 57	27 42,0	45	58 15	222 29 45	6	
☉ —— 3.		Noon.	47 6,0	50½	58 18			
	11 42 12	4 26 39	25 18,0	44	58 16	222 9 31	6	
	1 47 41	18 26 51	16 45,5	44	58 11	220 48 10	6	
☽ —— 4.		Noon.	47 23,0	44½	58 18¾			
	12 32 50	5 13 1	19 31,0	45	58 31	221 8 4	6	
	2 1 8	18 36 25	18 43,0	44½	58 30	220 37 31	6	
♂ —— 5.		Noon.	47 20,5	44	58 38¾			
	12 11 58	4 52 20	22 25,1	47	58 47	221 3 45	6	
	2 35 29	19 15 1	23 29,6	48	58 50	220 47 16	6	
☿ —— 6.		Noon.	47 14,0	48½	59 2⅓			
	12 47 59	5 26 8	18 18,2	47	59 4	220 23 40	6	
	1 57 16	18 31 36	18 9,1	45	59 23	219 24 30	6	
♃ —— 7.		Noon.	47 8,0	53	59 25⅓			

1778.	Time per Watch N° 2.	Apparent Time.	Observed Alt. of the ☉'s L. L.	Therm.	Latitude in.	Longitude in.	No of Observations.	Remarks.
	H. ′ ″	H. ′ ″	° ′		° ′	° ′ ″		
♃ May 7.	13 8 42	5 41 47	16 34,2	52	59 29 N.	219 4 6 E	6	Fine weather.
	3 4 27	17 33 16	26 14,5	47	59 12	217 58 7	6	
♀ —— 8.		Noon.	47 39,0	49	59 11⅙			
	12 42 46	5 12 24	20 39,7	50	59 18	218 9 46	6	
	1 59 1	18 25 33	17 51,3	48	59 30½	217 20 58	6	
♄ —— 9.		Noon.	47 33,0	52½	59 33⅓			
	13 9 30	5 33 47	18 2,3	51	59 31	216 45 36	6	
	2 29 42	18 52 7	21 26,3	49	59 45	216 15 45	6	
☉ —— 10.		Noon.	47 31,5	47½	59 50⅚			
	11 54 55	4 15 55	27 57,3	49	59 53⅓	215 53 12	6	
	2 2 16	18 22 6	17 53,6	50	59 56	215 32 40	6	
☽ —— 11.		Noon.	47 45,5	56	59 52½			
♄ —— 16.	3 51 56	20 1 53	31 15,5	54	60 43	212 50 39	6	
☉ —— 17.		Noon.	48 14,0	48	60 50½			
	4 49 0	20 57 55	37 41,7	47	60 42	212 38 12	6	
☽ —— 18.		Noon.	48 45,0	42	60 33			
♂ —— 19.	•	Noon.	49 20,0	43	60 12½			
	12 26 0	4 33 43	27 33,3	42	60 12	212 11 54	6	
☿ —— 20.	Merid. Alt. Arcturus.		50 42,5	41½	59 44			
	2 9 20	18 11 28	18 31,0	42	59 38	210 58 55	6	
♃ —— 21.		Noon.	50 28,0	42½	59 28⅚			
	13 29 31	5 27 24	21 3,8	43	59 22	210 0 48	6	
	4 33 0	20 27 17	35 59,0	40	59 28	208 49 13	6	
♀ —— 22.		Noon.	51 45,0	41½	58 24			
	13 5 15	4 58 58	25 3,0	41	58 13	208 38 19	6	
	2 53 19	18 48 26	23 30,3	42	58 54	208 58 31	6	
♄ —— 23.		Noon.	51 14,0	44	59 6½			
	12 39 16	4 34 16	28 21,7	43	58 52	208 56 15	3	
	3 39 36	19 31 51	29 20,7	42½	58 14	208 14 52	6	
☉ —— 24.		Noon.	52 21,7	44½	58 11			
	14 0 36	5 53 19	18 15,9	44	58 16	208 22 0	6	
	3 46 36	19 37 48	30 14,2	41½	58 25	207 57 30	6	
☽ —— 25.		Noon.	52 4,0	44	58 39⅚			
	3 35 37	19 21 7	28 9,0	43	59 10	206 31 9	6	
♂ —— 26.		Noon.	51 46,0	42	59 8½			
	13 37 48	5 27 52	21 57,5	42	59 15	207 40 58	6	
☿ —— 27.		Noon.	51 38,5	44	59 26			
	1 42 34	17 31 44	14 41,0	42½	59 43	207 25 1	6	
♃ —— 28.		Noon.	51 22,0	44	59 52⅓			
♀ —— 29.	3 42 56	19 34 39	30 4,7	44	60 36⅓	208 1 58	6	
♄ —— 30.	14 59 45	6 52 25	12 42,5	47	60 56	208 16 6	6	
	5 57 13	21 51 30	44 39,3	42½	61 12	208 40 27	6	
☽ June 1.	3 55 22	19 48 58	32 4,9	42	61 1	208 32 9	6	
♂ —— 2.		Noon.	50 56,0	43½	60 59½			
	3 12 16	19 3 28	26 50,8	43	60 43⅓	207 55 28	6	
☿ —— 3.		Noon.	51 25,5	45	60 40⅔			

1778.	Time per Watch N° 2.	Apparent Time.	Observed Alt. of the ☉'s L. L.	Therm.	Latitude in.	Longitude in.	N° of Observations.	Remarks.
	H. ′ ″	H. ′ ″	° ′	°	° ′	° ′ ″		
☿ J	3 46 29	19 36 35	31 3,9	42½	60 11 N	207 36 52 E	6	Fine weather.
♃ —— 4.		Noon.	52 2,5	43	60 11			
	14 2 31	5 52 28	20 5,2	42½	60 1	207 37 4	6	
	5 9 39	20 58 53	40 53,3	43	59 48	207 24 37	6	
♀ —— 5.		Noon.	52 32,0	46	59 49			
	13 22 4	5 11 35	25 9,0	43½	59 27	207 28 57	6	
	2 32 20	18 22 3	21 52,7	43	59 0	207 31 57	6	
♄ —— 6.		Noon.	53 48,0	45	58 38			
	13 23 26	5 14 10	24 56,7	44	58 31	207 47 30	6	
☉ —— 7.		Noon.	54 31,0	44	58 2¼			
	3 18 50	19 8 4	27 58,7	43½	57 56	207 35 39	6	
☽ —— 8.	13 17 32	5 7 53	25 53,7	43	57 46	207 42 40	6	
♃ —— 11.	3 1 49	18 49 19	25 42,7	45	56 53	207 2 0	6	Mod. and fine weather.
♀ —— 12.		Noon.	55 54,0	47	57 3¾			
	14 33 20	6 18 51	16 38,4	45	57 0	206 32 15	6	
	3 2 25	18 46 41	25 22,2	44	56 30	206 12 58	6	
♄ —— 13.		Noon.	56 12,0	46	56 49½			
	13 0 25	4 43 18	29 31,2	43	56 30	205 53 48	6	
☉ —— 14.		Noon.	56 42,0	44½	56 22¾			
♂ —— 16.		Noon.	57 20,0	45	55 50			
	13 42 32	5 7 52	26 13,3	45	55 47	201 32 51	6	
	2 24 54	17 48 39	17 24,0	43	55 34	201 6 39	6	
☿ —— 17.		Noon.	57 41,0	44½	55 31⅓			
	3 57 3	19 19 35	30 7,3	45	55 30	200 52 20	6	
♃ —— 18.		Noon.	57 50,0	47	55 23¾			
	4 12 17	19 31 3	31 46,6	45	55 21	199 56 58	6	
♀ —— 19.		Noon.	57 59,0	47	55 16			
	14 21 57	5 37 15	22 5,3	46	55 12	199 6 22	6	
	4 2 1	19 12 28	29 8,7	46	54 55	197 53 6	6	
♄ —— 20.		Noon.	58 31,5	47	54 44½			
	2 56 54	18 5 23	19 28,7	43½	54 20	197 24 30	6	
☉ —— 21.		Noon.	58 59,0	45	54 17¼			
	13 23 9	4 30 30	31 38,9	46	54 14	197 7 46	6	
	3 54 15	18 59 17	27 13,0	44½	53 49	196 33 43	6	
☽ —— 22.		Noon.	59 26,5	46	53 50¼			
♂ —— 23.		Noon.	59 35,5	46	53 40⅓			
	13 59 46	5 1 35	27 14,7	44	53 44	195 46 49	6	
☿ —— 24.	5 5 59	20 4 54	36 45,1	43	54 9	195 5 1	6	
♃ —— 25.		Noon.	59 8,0	46	54 5⅓			
	6 21 26	21 12 42	46 14,0	46	53 47	193 12 55	6	
♀ —— 26.	3 23 45	18 15 8	20 42,2	43	53 52	193 13 30	6	
♄ —— 27.		Noon.	59 17,5	46	53 52			
☽ —— 29.		Noon.	120 34,0	43	53 54	Fore observation on the North horizon.		
♂ —— 30.		Noon.	120 29,0		53 54¾	Fore observation.		
			120 28,7	44	53 54½	Do.		
			59 33,0		53 52¾	Back observation.		

1778.	Time per Watch N° 2.	Apparent Time.	Observed Alt. of the ☉'s L. L.	Therm.	Latitude in.	Longitude in.	N° of Observations.	Remarks.
	H. ′ ″	H. ′ ″	° ′	°	° ′	° ′ ″		
	The four last observations in the foregoing page were taken in Samgonood harbour at the island of Oonalaschka.							
☿ July 1.	4 17 21	19 8 22	28 16,1	43	53 56 N	193 10 0 E	6	Mod. and fine weather.
		Noon.	58 35,0	47	54 19			
♃ —— 2.	14 7 1	4 58 32	27 15,0	43	54 30	193 19 27	6	
		Noon.	56 56,0	42½	55 58½			
♄ —— 4.	12 32 12	3 37 57	38 17,7	42	55 57	196 56 20	6	
		Noon.	56 7,0	42	56 3⅓			
☉ —— 5.	3 20 30	18 33 52	23 20,2	40	56 59	198 48 42	6	
		Noon.	55 38,0	40	56 55			
☽ —— 6.	13 37 26	4 53 20	27 44,7	42	56 56	199 26 52	6	
	4 22 17	19 39 21	32 7,0	42	57 5	199 44 30	6	
		Noon.	55 23,0	48	57 4			
♂ —— 7.	13 54 36	5 12 48	25 0,5	41	57 2	200 1 31	6	
	2 59 4	18 18 57	21 10,6	42	57 13	200 26 45	6	
		Noon.	55 4,0	46	57 17⅙			
☿ —— 8.	12 13 9	3 32 31	38 13,2	42	57 25	200 19 4	6	
	4 12 21	19 34 16	31 10,0	42	57 42	200 57 19	6	
		Noon.	54 26,0	45	57 48½			
♃ —— 9.	13 39 20	5 4 5	26 1,7	42½	58 11	201 39 55	6	
	3 36 44	18 59 2	26 24,3	46	58 20	201 3 0	6	
		Noon.	53 50,5	47	58 16			
♀ —— 10.	13 15 30	4 36 51	29 30,2	47	58 17	200 48 49	6	
♄ —— 11.	4 9 29	19 27 13	29 52,7	43	58 6	199 53 55	6	
☉ —— 12.		Noon.	53 39,5	49	58 11½			
	13 21 17	4 38 51	29 0,3	47	58 24	199 51 24	6	
	3 10 41	18 24 42	21 33,5	51	58 18	198 57 55	6	
		Noon.	52 27,0	50½	58 15½			
☽ —— 13.	14 12 42	5 25 21	22 44,0	50	58 11	198 37 18	6	
	4 29 29	19 41 18	31 28,8	51	58 9	198 24 30	6	
		Noon.	53 19,0	54	58 14½			
♂ —— 14.	14 43 14	5 55 41	18 45,2	51	58 18	198 33 40	6	
		Noon.	53 3,0	49	58 21⅓			
☿ —— 15.	12 24 57	3 34 33	36 50,5	47	58 23	197 50 12	6	
	3 18 27	18 27 32	21 30,9	48	54 29	197 41 58	6	
		Noon.	52 47,0	50	58 28⅓			
♃ —— 16.	2 24 41	17 30 46	14 17,4	51	58 45	196 56 12	6	
		Noon.	52 12,0	54	58 53½			
♀ —— 17.	14 10 0	5 17 47	23 18,7	49	58 56	197 21 15	6	
	3 47 58	18 54 20	24 47,7	54	58 19	196 59 22	6	
		Noon.	51 27,0	54	59 27⅓			
♄ —— 18.	13 4 42	4 12 47	31 24,7	54	59 37½	197 17 0	6	Light winds, and fine weather.
	4 22 39	19 30 7	29 8,0	57	59 37½	197 15 0	6	
☉ —— 19.	13 38 40	4 46 13	26 58,5	61½	59 37½	197 15 47	6	
	3 26 46	18 34 17	21 57,7	57½	59 37½	197 15 0	6	

1778.	Time per Watch N° 2.	Apparent Time.	Observed Alt. of the ☉'s L. L.	Therm.	Latitude in.	Longitude in.	N° of Observations.	Remarks.
	H. ′ ″	H. ′ ″	° ′	°	° ′	° ′ ″		
☽ July 20.		Noon.	50 55,5	61	59 37⅓ N	E		Light winds and fine weather.
	13 53 42	51 1 33	24 55,0	62	59 37½	197 17 30	6	
	4 51 4	19 57 56	32 18,3	58	59 26	197 8 58	6	
♂ —— 21.		Noon.	50 56,5	62	59 25½			
	12 2 29	5 9 35	23 43,7	58	59 21	197 6 9	6	
♃ —— 23.	6 26 15	21 21 17	42 2,7	54	58 7	194 4 18	6	
♀ —— 24.		Noon.	51 38,0	50½	58 7½			
	15 42 13	6 34 0	12 28,0	49	58 11	193 14 0	6	
♄ —— 25.	3 51 24	18 35 31	21 2,0	45	58 31	191 20 1	6	
☉ —— 26.		Noon.	50 43,0	46	58 37⅙			
	13 32 44	4 16 28	29 44,0	46	58 46	191 4 30	6	
☽ —— 27.	3 50 4	18 29 2	19 53,7	48	59 35	198 51 13	6	
♂ —— 28.		Noon.	49 0,0	48½	59 53			
	3 43 0	18 12 18	17 41,3	45	60 18	197 23 43	6	
☿ —— 29.		Noon.	48 17,0	46	60 21⅓			
	15 9 0	5 37 40	18 49,7	44	60 18	197 12 54	6	
♃ —— 30.	4 36 51	19 11 2	24 26,2	43	61 2	188 31 30	6	
♀ —— 31.	3 41 50	18 23 40	18 34,5	49	61 53	190 23 27	6	
♄ Aug. 1.		Noon.	46 0,5	49½	61 57⅙			
☉ —— 2.	3 56 4	18 41 13	20 11,2	51	62 21	191 6 25	6	
☽ —— 3.		Noon.	44 52,0	53	62 33			
☿ —— 5.	4 18 39	19 11 22	22 38,7	48	64 35	192 24 1	6	Hazy weather.
♃ —— 6.		Noon.	41 56,0	51	64 40⅓			
☉ —— 9.		Noon.	40 0,0	45	65 46½			
	5 1 18	19 38 24	24 10,2	42	65 37	188 38 13	6	
☽ —— 10.		Noon.	39 55,5	45	65 35			
	14 53 39	5 31 22	16 58,0	41	65 36	188 45 25	6	
	3 18 17	18 1 6	14 2,7	46	66 0	189 59 40	6	
♂ —— 11.		Noon.	39 6,2	47½	66 4¾			
	6 19 43	21 5 31	31 9,7	41½	66 15	190 42 40	6	
☿ —— 12.		Noon.	38 35,0	41½	66 18½			
	14 3 2	4 49 37	20 36,7	40½	66 17	190 49 36	6	
	4 12 5	19 0 11	19 24,3	41	66 31	191 9 27	6	
♃ —— 13.		Noon.	38 5,2	41½	66 29½			
	14 22 4	5 10 45	18 12,0	42	66 33	191 16 10	6	
	4 51 23	19 48 22	23 29,5	44	67 20	193 17 30	6	
♄ —— 15.		Noon.	35 36,0	43½	68 22⅓			
☽ —— 17.		Noon.	32 48,5	35½	70 32½			
	4 48 49	20 4 14	22 25,6	34	70 27	197 20 30	6	
♂ —— 18.		Noon.	32 19,0	35	70 42¾			
	5 46 28	20 54 55	26 0,3	32	69 57	195 43 21	6	
☿ —— 19.		Noon.	32 34,0	34	70 7¾			
	14 15 55	5 23 9	15 1,5	36	70 15	195 25 31	6	
♀ —— 21.		Noon.	32 26,7	50½	69 35⅓			
	13 22 32	4 28 2	19 9,3	49	69 32	194 45 24	6	
♄ —— 22.		Noon.	32 44,0	44½	69 38			

1778.	Time per Watch N° 1.	Apparent Time.	Observed Alt. of the ☉'s L.L.	Therm.	Latitude in.	Longitude in.	N° of Observations.	Remarks.
	H. ′ ″	H. ′ ″	° ′		° ′	° ′ ″		
♄ Aug. 22.	5 23 9	20 24 54	22 47,2	41	69 40 N	193 39 13 E	6	Hazy weather.
☉ —— 23.	4 42 12	19 30 11	18 11,0	33½	69 32⅓	190 7 24	6	
☽ —— 24.		Noon.	31 30,2	36	69 30⅔			
	14 52 31	5 33 32	12 35,2	36½	69 30	188 19 16	6	
	5 54 27	20 29 35	22 40,0	37½	69 17	186 47 33	6	
♂ —— 25.		Noon.	31 15,0	41	69 25½			
☿ —— 26.	13 48 22	4 5 36	19 20,7	39	69 37	182 10 0	6	Fine weather.
♃ —— 27.		Noon.	30 23,2	41	69 35⅓			
	12 24 1	2 41 11	25 5,7	37	69 33	182 3 37	6	
	6 34 29	20 50 16	23 6,8	31	69 20	181 37 45	6	
♀ —— 28.		Noon.	30 18,0	32				
☉ —— 30.	7 22 46	21 51 57	27 8,8	34	67 42	184 38 7	6	
	5 39 53	20 15 32	20 12,0	35	67 20	186 7 38	6	
♂ Sept. 1.	5 53 0	20 38 21	21 59,8	35½	66 50	188 27 9	6	
☿ —— 2.		Noon.	31 9,2	38½	66 40⅓			
	13 27 19	4 13 51	17 29,7	38	66 30	188 53 21	6	
	4 10 28	18 57 57	12 51,0	45½	65 39	188 52 52	6	
♃ —— 3.		Noon.	31 56,3	40½	65 31⅓			
	13 27 34	4 12 28	17 42,5	39	65 24	188 11 36	6	
	5 1 47	19 43 21	17 14,7	37	64 53	187 16 54	6	
♀ —— 4.		Noon.	32 26,0	41	64 39⅓			
	13 31 45	4 13 24	17 36,0	42	64 29	187 15 43	6	
	5 29 6	20 16 3	20 23,0	38	64 10½	188 32 4	6	
♄ —— 5.		Noon.	32 34,7	40	64 10½			
	5 0 20	20 1 54	18 47,3	42	63 55	192 2 27	6	
☉ —— 6.		Noon.	32 24,7	43	63 36½			
	13 9 29	4 13 47	17 5,0	47	63 58	192 41 7½	6	
	3 56 47	19 3 21	12 21,7	47½	64 9	193 10 33	6	
☽ —— 7.		Noon.	31 43,3	48	64 15½			
	13 11 37	4 20 31	15 55,0	46	64 21	192 43 46	6	
	4 8 33	19 21 50	13 55,3	46	64 18	194 44 3	6	
♂ —— 8.		Noon.	31 14,0	47½	64 22½			
	13 27 44	4 46 23	12 55,0	46	64 21	196 1 40	6	
	6 12 28	21 35 10	25 22,8	46	64 32	196 57 17	6	
☿ —— 9.	13 30 5	4 55 25	11 34,8	42½	64 40	197 16 55	6	
♃ —— 10.		Noon.	30 17,8	45	64 33½			
	13 40 52	5 4 51	10 16,3	44	64 27	197 6 36	5	
	3 48 35	19 14 43	12 6,4	44½	64 19	197 34 39	6	
♀ —— 11.		Noon.	30 8,5	45½	64 20			
	3 52 7	19 16 21	11 53,3	44	64 33⅓	196 58 27	6	
♄ —— 12.		Noon.	29 33,4	44	64 32			
	13 54 55	19 18 36	11 47,7	46	64 32⅓	196 42 43	6	
☉ —— 13.		Noon.	29 10,5	47	64 32⅓			
	3 44 0	19 8 16	10 23,2	46	64 32⅓	296 42 54	6	
☽ —— 14.		Noon.	28 47,0	47	64 32⅔			
	3 44 32	19 11 10	10 20,3	46	64 32	197 11 49	6	

1778.	Time per Watch N° 2.	Apparent Time.	Observed Alt. of the ☉'s L. L.	Therm.	Latitude in.	Longitude in.	N° of Observations.	Remarks.
	H. ′ ″	H. ′ ″	° ′	°	° ′	° ′ ″		
♂ Sept. 15.		Noon.	28 38,7	47	64 18 N	E		Fine weather.
	12 57 49	4 26 33	12 32,3	37	64 21	197 40 30	6	
☿ —— 16.		Noon.	28 11,5	38	64 22			
	12 48 22	4 17 25	13 6,2	38	64 22	197 37 55	6	
♃ —— 17.		Noon.	27 57,8	39	64 12⅓			
	13 10 51	4 40 25	10 28,2	40	64 11	197 37 52	6	
	3 50 17	19 19 15	10 21,9	38½	63 49	197 27 52	6	
♀ —— 18.		Noon.	28 10,0	43½	63 36⅔			
	3 53 36	19 15 47	9 41,5	40	63 34	195 34 58	6	
♄ —— 19.		Noon.	27 42,5	42	63 40⅔			
	12 50 45	4 8 37	13 6,7	44	63 52	194 27 46	6	
	4 19 54	19 27 53	10 32,0	41	63 47	191 54 25	5	
☉ —— 20.		Noon.	27 19,6	42½	63 40⅔			
	5 3 35	20 5 43	14 20,4	38	63 0	190 19 4	6	
☽ —— 21.		Noon.	27 38,0	39	62 58⅓			
♂ —— 22.		Noon.	28 25,0	39	61 47⅔			
	13 0 6	3 54 36	14 29,5	38	61 34	188 14 33	4	
	6 26 39	21 14 46	21 35,4	38	60 30	186 31 42	6	
☿ —— 23.		Noon.	29 26,5	40	60 22⅔			
	4 48 44	19 42 53	12 17,5	39½	59 32	187 56 48	6	
♃ —— 24.		Noon.	30 7,5	46½	59 18⅓			
♄ —— 26.		Noon.	30 3,0	44½	58 36⅔			
	5 24 50	20 24 20	16 20,7	43	58 38	188 54 55	6	
☉ —— 27.		Noon.	29 37,0	46	58 38⅓			
	12 59 44	4 0 2	13 28,7	45	58 41	189 4 42	6	
	4 25 25	19 28 7	9 37,7	43	58 17	189 36 3	6	
☽ —— 28.		Noon.	29 48,0	46½	58 4⅓			
	13 16 20	4 21 35	10 53,7	45	57 55	190 11 25	6	
	5 48 27	20 58 32	20 11,0	44	57 8	191 19 7	6	
♂ —— 29.		Noon.	30 29,2	49½	56 59⅔			
	12 54 34	4 7 27	12 42,3	44	56 53	191 58 55	6	
	4 39 26	19 53 39	12 43,7	44	56 38	192 14 25	6	
☿ —— 30.		Noon.	30 34,0	47½	56 31⅓			
	13 5 28	4 19 56	10 58,3	45	56 29	192 15 28	6	
	4 30 46	19 45 56	11 48,5	42	55 43	192 21 25	6	
♃ Oct. 1.		Noon.	31 10,5	45	55 29⅔			
	13 5 42	4 21 9	10 58,0	44	55 13	192 23 13	6	
	4 55 41	20 10 3	15 15,3	43	54 8	192 2 22	6	
♀ —— 2.		Noon.	32 14,0	44	54 4⅔			
	12 3 46	3 19 31	18 57,3	55	54 2	192 21 3	6	
	4 1 35	19 18 43	8 9,8	43	53 58	192 36 52	6	
			Z. D. U. L.					
☽ —— 12.		Noon.	60 56,8	40	53 54⅓			Cloudy weather. At Samgoncoda.
♀ —— 16.		Noon.	62 26,3	45	53 54⅓			
☽ —— 19.		Noon.	63 32,1	46	53 54⅓			
			Alt. L. L.					
☽ —— 26.		Noon.	23 17,0	44	54 8⅓			

1778.	Time per Watch N° 2.	Apparent Time.	Observed Alt. of the ☉'s L. L.	Therm.	Latitude in.	Longitude in.	N° of Obs.	Remarks.
	H. ′ ″	H. ′ ″	° ′		° ′	° ′ ″		
♃ Oct. 28.		Noon.	22 45,0	43	53 59¼ N	E		Cloudy weather and strong gales.
	5 38 46	20 56 10	12 10,2	40	53 46	191 40 34	6	
♃ —— 29.		Noon.	22 32,0	41	53 52¼			
♀ —— 30.	4 52 6	20 21 38	8 32,5	39	52 27	194 36 40	6	
♀ —— 31.		Noon.	23 42,0	43	52 2¾			
	5 32 21	21 7 7	15 1,2	44	50 10	195 54 57	6	Fine weather.
☉ Nov. 1.		Noon.	25 29,0	46	49 56½	Bad observ.		Strong gales and hazy.
☿ —— 3.		Noon.	26 48,0	44	47 58½			
	5 1 16	20 52 17	15 22,0	47	46 1	199 54 21	6	
♂ —— 4.		Noon.	28 44,0	47½	45 45			
♃ —— 5.	5 31 58	21 28 31	21 47,4	49	42 32	201 15 30	6	
♀ —— 6.		Noon.	31 27,0	51½	42 25½			
♀ —— 7.		Noon.	32 20,0	56½	41 13½			
	4 27 23	20 11 51	14 23,3	58	40 47	202 13 48	6	
☉ —— 8.		Noon.	32 37,0	59	40 39½			
♂ —— 10.		Noon.	33 31,0	63	39 10½			
♀ —— 11.		Noon.	33 46,0	68	38 38½			
	11 36 6	3 48 42	12 24,1	65	38 36	205 18 30	6	
	3 49 32	20 5 57	11 34,3	67	38 18	206 12 58	6	
♃ —— 12.		Noon.	33 56,0	67	38 12½			
	3 51 11	20 8 55	12 54,5	66	36 25	206 33 10	5	
♀ —— 13.		Noon.	35 41,5	61	36 10½			
	3 38 54	19 57 30	12 3,7	69	33 45	206 48 1	6	
☉ —— 15.		Noon.	37 46,5	71	33 34			
☿ —— 16.		Noon.	38 20,0	70	32 45½			
	3 22 52	19 39 35	9 11,7	71	32 28	206 22 48	6	
♂ —— 17.		Noon.	38 22,5	73½	32 27½			
♀ Dec. 25.		Noon.	46 1,0	74	20 22			
♃ —— 26.		Noon.	45 57,0	74½	20 27½			
	11 42 26	3 32 27	22 2,5	70	20 23	202 46 27	6	
	5 5 29	20 54 47	26 48,2	66	20 38	202 38 55	6	
☉ —— 27.	4 16 8	20 5 48	17 53,7	71	20 30	202 50 33	6	
☿ —— 28.		Noon.	46 5,0	71½	20 23½			
	12 21 21	4 11 32	14 38,3	74	20 18	203 0 10½	6	
	5 15 40	21 5 49	28 54,5	75	20 25	203 10 0	6	
♂ —— 29.		Noon.	46 19,5	74	20 18			
♃ —— 31.	3 34 4	19 27 26	10 38,5	74	20 6	204 9 7	6	
1779.								
♀ Jan. 1.		Noon.	43 3,5	77	20 9½			
	11 54 30	3 48 22	19 23,3	74	20 9	204 18 39	6	
	4 4 1	19 56 30	16 32,7	73	20 0	204 1 25	6	Fine weather.
☉ —— 3.		Noon.	46 44,5	77	20 10½			
	4 10 27	20 1 26	17 49,5	76	19 38	203 50 16	6	
☿ —— 4.		Noon.	47 35,0	76	19 26			
	12 5 8	3 54 18	18 47,0	77	19 25	203 24 51	5	
	4 19 36	20 6 48	19 0,3	72	19 29	202 58 55	6	

1779.	Time per Watch N° 2.	Apparent Time.	Observed Alt. of the ☉'s L. L.	Therm.	Latitude in.	Longitude in.	N° of Observations.	Remarks.
	H. ′ ″	H. ′ ″	° ′	°	° ′	° ′ ″		
						E		Fine weather.
♃ July 5.		Noon.	47 47,5	77	19 20 E	202 32 13	6	
	11 59 43	3 45 2	20 46,5	75	19 11	202 19 22	6	
	3 45 30	19 29 43	11 50,8	72½	19 4			
♃ —— 6.		Noon.	48 15,5	75	18 51	201 40 39	6	
	4 4 59	19 46 15	15 18,7	73	18 58			
♃ —— 7.		Noon.	48 18,0	77	19 3½	201 40 52	6	
	11 54 41	3 35 49	22 46,0	74½	19 2	201 37 1	6	
	3 53 45	19 34 27	12 58,0	73	18 58			
♄ —— 8.		Noon.	48 29,0	77	19 0½	201 43 0	6	
	12 39 25	4 20 24	14 2,1	73	18 59	201 40 3	6	
	4 5 5	19 45 40	12 26,6	72	18 43	201 42 58	6	
♄ —— 9.	3 57 40	19 38 6	14 0,3	74	18 38	201 48 47	6	
☉ —— 10.	3 50 26	19 30 58	12 32,3	74	18 46			
☽ —— 11.		Noon.	49 1,5	73½	18 53½	201 54 1	6	
	12 32 54	4 13 40	15 38,5	72	18 55	201 34 40	6	
	4 11 36	19 50 32	16 48,3	73	18 31½			
♂ —— 12.		Noon.	49 33,0	77	18 32½	201 38 3	6	
	12 39 43	4 19 7	14 46,0	72	18 35	201 32 0	6	
	4 4 32	19 43 13	15 10,9	74	18 48			
♃ —— 13.		Noon.	49 18,5	78	18 56½	201 28 15	6	
	12 37 24	4 15 47	15 18,0	76	19 3			
♃ —— 14.		Noon.	49 24,5	74	19 1	201 19 18	6	
	3 55 38	19 3 2	15 6,3	75	19 6			
♀ —— 15.		Noon.	49 29,0	78	19 7½	201 38 18	6	
	4 6 27	19 42 51	15 5,7	74	19 23			
♄ —— 16.		Noon.	49 23,0	81	19 24⅓	201 7 45	6	
	12 36 48	4 13 2	15 56,5	77	19 25			
	At our arrival at Keragegooa Bay found the Watch 2° 44′ 39″ of longitude West of the truth.							
		Noon.	53 58,0	78	19 30	203 51 27	6	
♃ Feb. 4.	12 31 44	4 3 42	20 3,0	78	19 34			
		Noon.	54 13,0	78½	19 33	203 49 19	6	
♀ —— 5.	12 10 45	3 42 29	24 34,0	79	19 40			
		Noon.	54 11,0	77	19 53⅓			Very hazy.
♄ —— 6.		Noon.	54 8,0	74	20 8			
☉ —— 7.	In Keragegooa Bay, at anchor.							
♂ —— 16.	12 45 55	4 33 7	18 9,2		Whence the Watch is 15ʰ 47′ 9″,7 too slow for mean time at noon, and is losing 2″,45 per day on mean time.			
	At Sea among Sandwich Islands.							
☽ —— 22.	4 20 40	19 53 8	22 8,7	73	19 52	203 38 25	6	
		Noon.	59 58,0	77½	19 51¾			
♂ —— 23.	12 52 11	4 24 28	18 18,5	77½	19 50	203 34 36	6	

1779.	Time per Watch N° 2.	Apparent Time.	Observed Alt. of the ☉'s L. L.	Therm.	Latitude in.	Longitude in.	N° of Observations.	Remarks.
	H. ′ ″	H. ′ ″	° ′		° ′	° ′ ″		
♂ Feb. 23.	5 10 5	20 41 4	32 20,5	74	20 34 N	203 13 15 E	6	Fine weather.
☿ —— 24.		Noon.	59 31,0	75	20 41¼			
	12 34 34	4 5 25	22 23,7	74	20 41	203 10 19	6	
	3 39 16	19 9 12	12 25,7	75	20 40	202 54 45	6	
♃ —— 25.		Noon.	59 53,0	76	20 41⅓			
	3 44 41	19 13 21	13 24,5	77	21 3	202 33 22	6	
♀ —— 26.		Noon.	59 50,5	77	21 6½			
	13 27 38	4 56 8	11 18,0	76	21 12¼	202 28 55	6	
	4 11 47	19 39 22	19 8,0	73	21 47¾	202 13 6	6	
♄ —— 27.		Noon.	59 31,5	75	21 46¾			
	13 41 0	5 7 1	8 55,5	77	21 36	201 48 21	6	At anchor at Oahoo.
	4 55 18	20 19 17	27 49,3	73	22 13	201 15 45	6	
☉ —— 28.		Noon.	59 32,5	75	22 9			
	12 46 37	4 8 12	22 2,1	74	22 0	200 39 24	6	
	3 56 33	19 16 26	14 21,0	74	21 57¼	200 10 45	6	Each a mean of the Sextants.
☽ Mar. 1.		Noon.	60 6,5	75	21 57¼			
	13 6 26	4 26 21	18 13,2	75	21 57¼	200 10 22	6	
♂ —— 2.		Noon.	60 29,5	75	21 58			
☿ —— 3.		Noon.	60 53,5	75	21 57¼			
♃ —— 4.		Noon.	61 15,0	77	21 57¼			At anchor at Atowi.
	13 33 22	4 54 0	12 32,2	76	21 57¼	200 8 30	6	
♀ —— 5.		Noon.	61 37,5	78	21 57¼			
♄ —— 6.		Noon.	62 2,0	76	21 57			
☉ —— 7.		Noon.	62 25,0	76	21 57¼			
	6 1 21	21 22 48	42 47,2	73	21 57¼	200 6 30	6	
☽ —— 8.	13 35 42	4 55 8	12 56,0	76	21 50	199 34 28	6	

The true difference of longitude between the anchoring places at Oneehow and Atowi is 33 miles.
The true longitude of Oimea Road at Atowi being 200° 21′ 12″ E.
The true longitude of the anchoring place at Oneehow 199 48 12 E.

♂ —— 9.		Noon.	63 19,0	73	21 50¼			At anchor at Oneehow.
☿ —— 10.		Noon.	63 42,5	75	21 50¼			
♃ —— 11.		Noon.	64 6,0	76	21 50½			
♀ —— 12.		Noon.	64 30,0	75	21 50			
☉ —— 14.		Noon.	65 17,5	74	21 49¼			

At Sea.

☽ —— 15.		Noon.	65 42,5	75	21 47¾			
	13 9 7	4 29 39	19 50,0	74	21 46	199 18 0	6	
	4 9 0	19 28 8	19 27,8	73	21 37	198 54 0	6	
♂ —— 16.		Noon.	60 20,0	74	21 34			
	13 24 13	4 40 47	17 30,3	73	21 29	198 9 30	6	Fine weather.
	4 27 32	19 39 40	22 18,7	75	21 19	197 3 58	6	

1779.	Time per Watch N° 2.	Apparent Time.	Observed Alt. of the ☉'s L. L.	Therm.	Latitude in.	Longitude in.	N° of Observations.	Remarks.
	H. ′ ″	H. ′ ″	° ′		° ′	° ′ ″		
♄ Mar. 17.		Noon.	66 59,5	75½	21 18¼ N	E		Fine weather.
	4 26 18	19 32 24	20 49,3	74	21 16	195 28 49	6	
♃ —— 18.		Noon.	67 26,0	77	21 15⅓			
	14 4 10	5 7 42	11 39,3	74	21 15	194 47 58	6	
	4 14 39	19 15 56	17 12,0	73½	21 13	194 11 16	6	
♀ —— 19.		Noon.	67 53,5	75½	21 11¾			
	14 11 57	5 22 28	8 24,4	73	21 10½	193 48 15	6	
	4 1 51	19 10 49	16 12,3	72	20 56	193 21 49	6	
♄ —— 20.		Noon.	68 35,0	75½	20 54¼			
	13 47 36	4 55 46	14 44,5	74	20 51	193 7 48	6	
	4 51 36	19 56 21	26 52,7	73	20 43	192 13 18	6	
☉ —— 21.		Noon.	69 13,3	77½	20 39⅓			
	13 40 22	4 43 15	17 48,7	74	20 36½	191 43 28	6	
	4 32 32	19 31 58	21 27,7	75	20 32	190 48 19	6	
☽ —— 22.		Noon.	69 48,0	78	20 28⅓			
	13 57 48	4 55 24	15 8,0	76	20 26	190 19 34	6	
♂ —— 23.		Noon.	70 39,5	74	20 0½			
	13 46 29	4 34 28	20 12,8	74½	19 57	187 49 31	6	
	4 56 10	19 38 8	23 16,3	75	19 53	186 15 39	6	
☿ —— 24.		Noon.	71 10,0	77	19 53¾			The air very hazy.
	14 9 50	4 41 19	17 3,0	75	19 53	185 27 30	6	
	4 44 17	19 18 42	18 51,3	76	19 59	184 17 27	6	
♃ —— 25.		Noon.	71 28,0	79	19 59½			
	14 15 6	4 48 16	17 16,3	78	20 0	183 56 43	6	Fine weather.
	4 42 4	19 12 48	17 37,5	78½	19 52	183 16 54	6	
♀ —— 26.		Noon.	72 0,0	79	19 51¼			
	14 20 12	4 49 21	17 10,2	79	19 50	182 50 58	6	
	4 49 57	19 16 44	18 40,8	77	19 51	182 12 19	6	
♄ —— 27.		Noon.	72 24,0	81	19 50¾			
	14 35 13	5 0 48	14 37,6	80	19 51	181 52 45	6	
	4 33 35	18 57 16	14 15,2	79	20 2	181 21 12	6	
☉ —— 28.		Noon.	72 34,0	79½	20 4⅓			
	4 46 7	19 7 34	16 46,8	79½	20 15	180 41 42	6	
☽ —— 29.		Noon.	72 45,0	80	20 16¾			
	15 4 24	5 26 1	9 0,0	79	20 18	180 41 55	6	
♂ —— 30.		Noon.	73 5,0	79	20 20⅓			
	14 19 23	4 38 38	20 10,5	77	20 22	180 0 57	6	
	4 35 22	18 54 2	13 53,0	79	20 34	179 49 24	6	
☿ —— 31.		Noon.	73 10,0	83	20 38⅓			
	4 43 21	19 0 38	15 32,4	79	21 5	179 13 28	6	
♃ April 1.		Noon.	72 55,0	79½	21 16¾			
	6 15 45	20 26 12	35 16,5	75	22 26	177 35 18	6	
♀ —— 2.		Noon.	71 56,0	74	22 39⅙			
	5 11 0	19 13 27	18 38,5	74	24 24	175 30 10	6	
♄ —— 3.		Noon.	70 19,0	74½	24 39⅓			
	5 30 53	19 26 55	21 44,7	73½	25 57	173 49 0	6	

1779.	Time per Watch N° 2.	Apparent Time.	Observed Alt. of the ☉'s L. L.	Therm.	Latitude in.	Longitude in.	N° of Observations.	Remarks.
	H. ′ ″	H. ′ ″	° ′		° ′	° ′ ″		
☽ April 5.		Noon.	67 16,0	71	28 27⅓ N	E		Moderate weather.
♂ —— 6.	7 57 28	21 32 16	48 0,0	59	30 3	168 15 40	6	
☿ —— 7.		Noon.	66 25,0	60	30 3¾			
	14 38 9	4 11 22	26 38,5	60	30 7	167 49 33	6	
	5 31 58	19 1 36	16 38,4	61	30 28	166 52 39	6	
♃ —— 8.		Noon.	66 12,0	61	30 39⅙			
	15 50 6	5 18 29	12 24,9	61½	30 54	166 32 0	6	
	5 40 59	19 8 18	18 12,5	64	31 58	166 12 43	6	
♀ —— 9.		Noon.	64 56,5	66	32 17⅓			
♄ —— 10.		Noon.	64 5,0	66	33 32¾			Hazy weather.
☽ —— 12.		Noon.	61 12,5	67½	37 9½			
☿ —— 14.	9 0 57	22 8 49	49 29,2	40½	41 43	160 52 27	6	
♃ —— 15.		Noon.	57 38,5	41½	41 49			
	14 44 27	3 50 51	30 6,4	41	41 56	160 30 1	6	
	8 26 25	21 29 37	43 47,8	39	42 12	159 39 57	6	
♀ —— 16.		Noon.	57 36,0	43	42 12½			
	6 10 28	19 13 6	20 19,8	40	42 52	159 26 6	6	
♄ —— 17.		Noon.	56 52,0	42	43 18½			
	8 52 38	21 57 11	46 2,7	38	45 50	159 51 33	6	
☉ —— 18.		Noon.	54 24,0	34½	46 7⅓			
☽ —— 19.		Noon.	52 12,0	31	48 40⅓			
	5 37 29	18 44 51	15 42,3	29½	49 41	160 25 0	6	
♂ —— 20		Noon.	51 25,5	32	49 47⅓			
	15 38 12	4 48 36	20 0,8	32½	49 57	161 8 0	6	
	7 0 39	20 13 45	29 52,3	34½	50 16	161 46 55	6	
☿ —— 21.		Noon.	51 8,5	34	50 25⅙			
	14 40 48	3 52 43	28 52,6	44	50 36	161 27 42	6	
♀ —— 23.		Noon.	50 8,3	36	51 57⅓			
	13 34 48	2 38 42	39 4,0	31½	51 59	159 18 54	6	
☉ —— 25.		Noon.	50 5,0	30	52 49			A bad horizon.
♂ —— 27.		Noon.	51 20,0	32	52 12½			
	6 29 25	19 32 37	24 57,2	32	52 22	158 54 15	6	
☿ —— 28.		Noon.	51 28,5	30½	52 23⅓			
	15 3 18	4 6 33	28 6,0	30	52 27	158 53 52	6	
♃ —— 29.		Noon.	51 35,0	34	52 35½			
	15 28 46	4 31 57	24 32,0	34	52 46	158 49 54	6	Hazy.
	5 27 19	6 29 54	15 55,6	34	52 44	158 39 13	6	
♀ —— 30.		Noon.	51 40,5	41	52 48½			
		In Awatschaia harbour—at anchor at Kamtschatka.						
♄ May 1.		Noon.	51 47,0	41	52 58⅔			
☽ —— 3.		Noon.	52 23,5	41	52 58½			
♂ —— 4.		Noon.	52 41,0	44	52 58½			

On our arrival at St. Peter and St. Paul at Kamtschatka the Watch N° 2. gave its longitude within four or five miles of the mean of the results of the observations taken afterward there.

1779.	Time per Watch No 2.	Apparent Time.	Observed Alt. of the ☉'s L. L.	Therm.	Latitude in.	Longitude in.	No of Observations.	Remarks.
	H. ′ ″	H. ′ ″	° ′		° ′	° ′ ″		
♂ June 15.	7 45 36	20 52 23	43 49,3	48	52 50 N	158 44 9 E	6	Off St. Peter and St. Paul at Kamtschatka.
☿ —— 16.		Noon.	60 20,5	48½	52 49			
	6 46 9	19 54 17	35 22,6	43	52 47½	159 5 48	6	Fine weather.
♃ —— 17.		Noon.	60 23,2	45	52 48½			
	15 2 47	4 11 13	34 34,4	42	52 46	159 10 45	6	
	5 37 40	18 47 1	25 15,7	43	52 44½	150 27 48	6	
♀ —— 18.		Noon.	50 28,0	43	52 45½			
☉ —— 20.		Noon.	58 18,5	41	54 57⅓			
	15 30 4	4 55 40	27 59,7	40	55 17	163 32 6	6	
	5 37 59	19 5 12	28 7,2	43	55 50	163 57 3	6	
☽ —— 21.		Noon.	57 24,5	48½	55 52			
	15 25 30	4 53 27	28 18,7	51½	56 2	164 8 37	6	
	5 15 31	18 54 42	26 43,6	43	58 10	167 0 37	6	
♃ —— 24.		54 52 30	Noon.	46	58 23			
	5 8 9	18 52 49	26 29,5	49	59 0	168 23 52	6	
♀ —— 25.		Noon.	54 4,0	48	59 9¾			
☉ —— 27.		Noon.	53 13,0	41	59 57¾			
	14 27 45	14 40 52	29 43,3	40	60 11	175 33 36	6	Bad horizon.
	5 26 49	19 39 3	31 53,7	41	61 45	175 20 54	6	Fine weather.
☽ —— 28.	15 47 24	6 6 12	19 36,3	50	62 6	176 59 42	6	
♂ —— 29.	5 39 47	20 11 31	35 29,7	42	61 50½	180 15 39	6	
☿ —— 30.		Noon.	51 10,0	44½	61 52			
♄ July 3.		Noon.	49 12,0	39½	63 37¾			
	12 40 3	3 39 49	35 37,2	39	63 40	187 19 9	6	
♀ —— 9.		Noon.	43 3,0	30	69 12⅓			
	12 11 7	3 13 43	34 55,2	29	69 8	188 7 6	6	
	5 34 30	20 40 23	34 55,0	31½	68 5	188 56 36	6	
♄ —— 10.		Noon.	44 5,0	35	68 2⅔			
	13 48 56	4 54 20	26 33,5	34	67 58	188 49 30	6	
☽ —— 12.	3 52 46	18 56 28	25 15,2	33	69 34	188 24 12	6	
♂ —— 13.		Noon.	42 18,0	38	69 26			
☿ —— 14.		Noon.	41 58,0	38	69 31			
	5 39 42	20 49 11	34 9,3	33	69 34	189 50 30	6	
♃ —— 15.		Noon.	41 51,0	33	69 35 1/10			
♄ —— 17.		Noon.	41 10,5	39	69 56⅓			
	11 30 34	3 3 25	34 5,5	33	70 00	195 40 0	6	
	3 2 5	18 37 51	22 54,7	34	70 16	196 23 54	6	
☉ —— 18.		Noon.	40 29,5	34	70 28⅓			
	4 8 59	19 48 33	28 33,2	32	70 20	197 17 45	6	
☽ —— 19.		Noon.	40 30,0	35½	70 16¾			
	13 4 39	4 41 55	26 4,8	34	70 9	196 44 51	6	
	3 53 8	19 2 26	24 23,0	42	69 32	189 42 18	6	
♃ —— 22.		Noon.	40 40,0	42	69 32¾			
♀ —— 23.	4 27 11	19 31 38	26 37,0	36	69 2	188 27 3	6	
♄ —— 24.		Noon.	40 53,5	37	68 55			
☉ —— 25.		Noon.	40 56,0	36	68 39¾			

1779.	Time per Watch N° 2.	Apparent Time.	Observed Alt. of the ☉'s L. L.	Refr.	Latitude in.	Longitude in.	N° of Observations.	Remarks.
	H. ′ ″	H. ′ ″	° ′		° ′	° ′ ″		
☉ July 25.	3 54 40	19 3 59	23 56,0	38	68 8 N	189 36 30 E	6	Fine weather.
☽ —— 26.		Noon.	41 22,0	38½	68 0½			
♂ —— 27.	3 18 26	18 25 57	19 56,4	43	67 11	189 0 51	6	
☿ —— 28.		Noon.	41 46,5	40½	67 9½			
	13 53 14	5 5 30	22 40,0	42	66 55	190 16 7	6	
	3 43 12	18 56 2	22 41,7	43	66 50	190 23 7	6	
♃ —— 29.		Noon.	41 51,5	42	66 5½			
♀ —— 30.	4 44 24	19 55 26	28 22,3	41	65 30	189 51 21	6	
♄ —— 31.		Noon.	43 4,5	40½	65 9			
	14 4 27	5 14 20	21 14,0	40½	65 1	189 32 16	6	
	4 18 46	19 29 10	25 44,7	39	64 34	189 39 15	6	
☉ Aug. 1.		Noon.	43 34,0	40	64 24½			
	5 20 26	20 32 12	32 4,0	49½	64 4	189 56 49	6	
☽ —— 2.		Noon.	43 43,0	37	64 0½			
	14 10 40	5 25 0	19 39,5	39	64 4	190 34 19	6	
♃ —— 5.		Noon.	44 24,0	42½	62 32⅓			
	14 40 33	5 37 8	17 39,6	41	62 0	185 58 21	6	
♀ —— 6.	3 53 6	18 41 36	19 23,3	44½	59 49	183 51 42	6	
♄ —— 7.		Noon.	46 45,0	46	59 38			
	14 16 52	5 5 25	20 55,3	45	59 30	183 51 10	6	
☽ —— 9.		Noon.	46 58,0	47	58 51⅙			
♂ —— 10.		Noon.			58 25			
	4 0 18	18 7 44	13 55,3	48	57 33	173 20 0	6	
☿ —— 11.		Noon.	47 49,0	50	57 25			
	7 6 48	21 9 10	37 17,2	49	56 39	171 59 30	6	
♃ —— 12.		Noon.	48 25,5	50	56 30½			
	14 23 24	4 24 46	25 27,5	49	56 17	171 43 12	6	
	5 29 3	19 27 40	24 24,0	49	55 33	170 59 0	6	
♀ —— 13.		Noon.	49 13,5	51	55 24½			
	7 36 21	21 38 33	41 9,2	47	54 47	171 47 46	6	
♄ —— 14.		Noon.	49 28,5	48	54 51⅓			
☉ —— 15.	7 50 23	21 50 0	42 2,3	49	54 25	170 59 28	6	
☽ —— 16.		Noon.	49 20,0	50	54 22½			
	5 54 31	19 46 43	26 25,0	49	53 55	169 3 49	6	
♂ —— 17.		Noon.	49 33,0	57	53 50½			
	14 55 38	4 46 38	21 30,7	52	53 44½	168 44 0	6	
	5 8 36	18 58 40	19 15,0	53	52 57	168 26 46	6	
☿ —— 18.		Noon.	50 21,0	54	52 43½			
♃ —— 19.	15 2 35	4 41 0	21 57,7	48	52 43½	165 24 46	6	
♀ —— 20.	7 9 54	20 37 44	32 27,2	53	53 43	162 36 43	6	
♄ —— 21.		Noon.	48 18,0	57	53 46½			
	15 21 8	4 48 36	20 10,0	55	53 50	162 29 45	6	
	5 42 37	19 6 50	19 24,7	54	53 15	161 37 36	6	
☉ —— 22.		Noon.	48 37,0	55	53 7½			
	15 54 20	5 18 32	15 31,0	54	53 1	161 34 49	6	
	8 9 4	21 32 12	39 8,7	54	52 50	161 15 3	6	

1779.	Time per Watch N° 2.	Apparent Time.	Observed Alt. of the ☉'s L. L.	Therm.	Latitude in.	Longitude in.	N° of Observations.	Remarks.
	H. ′ ″	H. ′ ″	° ′		° ′	° ′ ″		
☽ Aug. 23.	5 40 30	18 57 6	17 27,7	56	52 52 N	159 32 52 E	6	Fine weather.
	The Watch N° 2. gave 55′ miles of longitude East of the truth on our return to Kamtschatka. It lost 12′ 56,″2 in 71 days, or at the rate of 10,932 per day on mean time.							
♄ Oct. 9.	6 2 58	19 44 27	10 3,5	46	52 35	158 37 22	6	Fine weather,
☉ —— 10.		Noon.	30 42,0	53	52 36¼			
☽ —— 11.		Noon.	30 51,0	47	52 4¼			
	14 16 33	3 57 39	12 20,4	46	51 56	158 20 51	6	
	6 55 24	20 34 21	16 47,0	43½	51 2½	157 43 45	6	
♂ —— 12.		Noon.	31 33,0	45	51 0			
	14 19 26	3 56 21	12 20,7	43½	50 55	157 11 24	6	
	4 34 28	19 52 45	11 22,9	42	50 2	156 48 25	6	
☿ —— 13.		Noon.	32 22,0	42	49 48			
	12 29 48	3 47 51	14 14,2	42	49 33	156 42 45	6	
	5 20 19	20 34 51	17 42,2	42	48 29	155 45 10	6	
♃ —— 14.		Noon.	33 31,0	43	48 16¼			
	12 38 53	3 51 57	14 8,0	42	48 0	155 21 9	6	
	4 25 49	19 38 30	10 5,0	43	46 43	155 11 58	6	
♀ —— 15.		Noon.	34 54,5	44	46 30¼			
	12 35 19	3 49 16	15 6,8	42	46 14	155 27 51	6	
	4 30 7	19 44 17	11 13,0	42	45 28½	155 26 55	6	
♄ —— 16.		Noon.	35 38,0	43½	45 24½			
	12 26 22	3 39 58	16 40,0	43	45 20	155 16 13	6	
	6 1 35	21 9 25	23 25,7	43	45 8	153 45 13	6	
☉ —— 17.		Noon.	35 33,0	46	45 7			
	12 46 53	3 53 36	14 32,2	45	45 3	153 26 48	6	
	4 36 23	19 40 55	10 32,0	45	44 30	152 49 51	6	
♂ —— 19.		Noon.	35 42,0	46	44 14¼			
	12 52 23	3 48 46	15 8,0	47	44 4	150 39 51	6	
♃ —— 21.		Noon.	36 31,0	45	42 41¼			
	4 52 50	7 40 45	10 49,3	45½	41 11	148 17 33	6	
♀ —— 22.		Noon.	37 52,5	45	40 58¼			
	5 3 46	19 46 15	11 47,0	44	40 33	146 50 30	6	
♄ —— 23.		Noon.	37 55,5	35½	40 34½			
☉ —— 24.		Noon.	37 24,0	39	40 45			
	5 41 40	20 6 8	14 34,7	43	40 2	142 5 15	6	
♂ —— 26.		Noon.	37 23,0	62	40 4			
	5 58 38	20 17 0	16 26,7	60	39 22	142 58 51	6	
☿ —— 27.		Noon.	37 50,0	59	39 16½			
	5 25 16	19 49 31	12 8,0	60	38 17½	141 52 52	6	
♃ —— 28.		Noon.	38 33,0	61	38 13¼			
	13 36 3	3 58 39	14 11,3	60	38 4	141 26 45	6	
♀ —— 29.	5 9 39	19 34 5	9 31,3	65	37 3	141 47 39	6	
♄ —— 30.		Noon.	39 25,0	68	36 41¼			

1779.	Time per Watch N° 2.	Apparent Time.	Observed Alt. of the ☉'s L L.	Ther.	Latitude in.	Longitude in.	N° of Observations	Remarks.
	H. ′ ″	H. ′ ″	° ′	°	° ′	° ′ ″		
♄ Oct. 30.	5 13 24	19 38 1	10 33,7	63	35 46 N	141 46 15 E	6	Fine weather.
☉ —— 31.		Noon.	40 13,0	64	35 53⅓			
☽ Nov. 1.		Noon.	40 10,5	63½	35 16½			
	14 7 0	4 28 8	9 25,7	68	35 9	141 46 15	6	
	5 24 24	19 47 41	12 16,7	63	35 20	141 22 40	6	
♂ —— 2.		Noon.	39 25,0	63	35 42⅓			
	7 46 24	22 21 13	33 21,0	71	36 37	144 8 24	6	
☿ —— 3.		Noon.	38 21,0	73	36 28			
	5 15 16	19 57 23	13 5,3	72	35 53	145 55 16	6	
♃ —— 4.		Noon.	38 41,0	72	35 48½			
	13 22 26	4 5 43	12 33,3	71	35 43	146 11 48	6	
	6 36 37	21 21 27	26 34,0	70	35 19	146 32 46	6	
♀ —— 5.		Noon.	38 58,0	70	35 13½			
	5 37 41	20 25 31	17 54,2	69	35 3	147 0 30	6	
♄ —— 6.		Noon.	38 53,0	70	35 0⅔			
	13 9 17	3 56 48	14 0,0	68	34 56	147 19 36	6	
	5 15 55	20 6 27	14 58,0	79	34 6	147 53 0	6	
☉ —— 7.		Noon.	39 45,0	71	33 50½			
♂ —— 9.		Noon.	41 15,0	68	31 46⅔			
	12 23 55	3 4 33	24 17,4	65	31 30	145 20 12	6	
♀ —— 12.	4 59 4	19 30 51	11 1,0	71	26 22	143 1 46	6	
♄ —— 13.		Noon.	45 59,0	72	25 54⅓			
	13 35 27	4 5 41	15 57,5	71	25 33	142 38 13	6	
	5 23 5	19 49 6	15 14,6	72	24 43	141 34 43	6	
☉ —— 14.		Noon.	47 2,3	73	24 35⅓			
	13 13 25	3 37 43	21 46,0	73	24 27	141 8 13	6	
☽ —— 15.		Noon.	46 32,0	74	24 50			
	14 1 46	4 22 3	12 46,2	78	24 51	140 7 12	6	
	5 39 38	19 53 54	15 43,2	79	25 5	138 36 4	6	
♂ —— 16.		Noon.	46 0,0	81	25 6⅓			
	13 36 37	3 47 57	19 11,3	80	25 3	137 52 42	6	
	5 14 46	19 24 0	9 45,0	76	24 52	137 20 55	6	
☿ —— 17.		Noon.	46 7,0	76	24 43⅔			
	5 24 27	19 24 33	10 9,2	74	23 55	135 4 0	6	
♃ —— 18.		Noon.	46 51,0	74	23 46			
	6 35 52	20 26 56	22 47,6	74	22 56	132 48 19	6	
☿ —— 19.		Noon.	47 34,0	76	22 48½			
	6 17 9	19 59 28	17 44,5	76	22 12	130 37 36	6	
♄ —— 20.		Noon.	48 4,0	80½	22 4⅔			
	14 55 38	4 34 57	10 52,0	76	21 56	129 52 28	6	
	6 15 34	19 48 34	15 45,7	78½	21 34	128 18 6	6	
☉ —— 21.		Noon.	48 29,0	80½	21 25½			
	14 16 11	3 46 37	20 47,0	78	21 18½	120 40 1	6	
☿ —— 24.	8 8 34	21 10 38	30 35,5	74	21 43	120 38 28	6	
♃ —— 25.		Noon.	47 30,0	75	21 34⅓			
	9 19 19	22 15 13	40 32,0	70	21 13	119 7 0	6	

1779.	Time per Watch N° 2.	Apparent Time.	Observed Alt. of the ☉'s L.L.	Therm.	Latitude in.	Longitude in.	N° of Observations.	Remarks.
	H. ′ ″	H. ′ ″	° ′	°	° ′	° ′ ″		
♀ Nov. 26.		Noon.	47 41,5	73	21 11 N	E		Fine weather.
	14 59 1	3 52 49	19 7,8	72	21 5	118 36 4	6	
♄ —— 27.	9 17 44	21 59 58	38 42,0	69	20 55	115 45 55	6	
☉ —— 28.	15 4 23	3 44 36	20 40,3	70	20 49	115 16 0	6	
	8 48 37	21 24 12	32 15,0	67	21 47	114 8 1	6	
☽ —— 29.		Noon.	46 22,0	71½	21 57¾			
	8 4 36	20 35 9	23 34,8	65	21 55	112 57 15	5	
♂ —— 30.		Noon.	Double Alt°		21 56			
☿ Dec. 1.	6 49 33	19 17 42	8 14,6	58	22 7	112 23 24	6	
♃ —— 2.		Noon.	45 44,0	59	22 7	In the River Canton at China.		
	8 1 24	20 28 44	21 58,5	63	22 11	112 14 43	6	In Macao Road.
	The Watch N° 2. gave the longitude 1° 29′ West of the truth when we arrived at the Typa, at Macao.							
1780. ☿ Jan. 12.	At noon the Watch was 12ʰ 24′ 14″,3 too slow for mean time at the Typa, and losing at the rate of 10″,60 per day on mean time, during the time we lay there.							
♃ —— 13.	7 46 54	20 2 43	18 10,0	62	20 48	113 46 15	6	
♀ —— 14.		Noon.	47 52,5	63	20 33			
	15 43 10	3 59 7	18 17,2	63	20 16	113 49 28	6	
♄ —— 15.	7 24 35	19 40 28	14 30,0	62	19 24	113 50 12	6	
		Noon.	49 38,5	64	18 57¾			
	15 26 15	3 41 51	22 21,0	69	18 38	113 46 52	6	
☉ —— 16.	8 10 5	20 26 36	25 8,8	69½	17 3	114 2 30	6	
		Noon.	Double Alt°		16 39			
☽ —— 17.	8 0 57	20 14 50	24 2,2	64	14 53	113 25 15	6	
		Noon.	54 21,0	66	14 37¾			
♂ —— 18.	8 44 13	20 52 22	32 48,0	68	12 57	112 1 22	6	
☿ —— 19.		Noon.	56 35,0	67	12 38			
		Noon.	58 59,0	71	10 24			
	13 53 56	3 50 33	25 30,3	70	10 0	109 11 16	6	
♃ —— 20.	7 30 5	19 20 1	15 6,7	70	8 57	107 32 22	5	
		Noon.	60 49,0	68	8 46¾			
	17 12 18	4 58 7	11 7,5	70	8 44	106 31 15	6	
	This last was observed in the entrance of the harbour at Pulo Candore.							
♀ —— 28.	7 24 46	19 5 55	13 5,3	80	7 10	105 28 28	6	
♄ —— 29.		Noon.	64 55,5	81	6 50¾			
	9 32 27	21 9 27	41 51,2	80	5 14	104 25 51	6	
☉ —— 30.		Noon.	67 3,5	79½	4 59			
	8 4 40	19 39 53	22 20,2	79	3 37	103 59 1	6	
☽ —— 31.		Noon.	69 0,5	78	3 18⅔			
	17 4 36	4 39 27	18 1,5	77	3 3	103 53 19	6	
	7 46 9	19 23 54	19 18,4	80	1 37	104 36 31	6	
♂ Feb. 1.		Noon.	71 18,0	80	1 18			

1780.	Time per Watch N° 2.	Apparent Time.	Observed Alt. of the ☉'s L.L.	Therm.	Latitude in.	Longitude in.	N° of Observations.	Remarks.
	H. ′ ″	H. ′ ″	° ′		° ′	° ′ ″		
♂ Feb. 1.	7 23 50	19 3 8	14 56,3	80	0 2 S	104 58 52 E	6	Fine weather.
☿ —— 2.		Noon.	73 15,0	80	0 22			
	17 24 25	5 2 39	13 47,5	81	0 46	104 42 48	6	
	7 42 6	19 20 1	19 28,0	80	1 40	104 37 26	6	
♃ —— 3.		Noon.	74 59,0	81	1 18½			
	7 12 28	18 51 31	12 52,7	80	2 21	104 53 21	6	
♀ —— 4.		Noon.	75 51,0	82	2 23			
	7 27 43	19 8 57	17 14,0	80	2 58	105 24 43	6	
♄ —— 5.		Noon.	76 55,0	82	3 9			
	17 6 13	4 48 42	17 55,3	82	3 27	105 43 4	6	
	8 11 3	7 53 40	28 20,3	81	4 23	105 43 48	6	
☉ —— 6.		Noon.	78 40,0	82	4 35½			
	7 49 21	19 31 29	23 10,2	81	4 56	105 35 16	6	
☽ —— 7.		Noon.	79 44,0	81½	5 21			
☿ —— 9.	7 59 35	19 53 30	25 14,0	81½	6 6	104 45 15	6	Cloudy.
♃ —— 10.		Noon.	81 26,0	83	6 5¾			
♀ —— 11.		Noon.	81 46,0	82	6 6⅓			
	7 50 24	19 39 3	23 0,8	82	6 6			
♂ —— 15.		Noon.	83 36,0	82	6 36			
	9 7 32	20 46 17	41 45,3	81	6 36	104 19 55	6	
☿ —— 16.		Noon.	83 57,0	82	6 36¼			
♀ —— 18.		Noon.	84 15,0	84	6 42½			
	17 6 36	4 45 7	19 28,7	83	6 49	104 7 46	6	
	7 32 39	19 11 35	18 45,3	82	7 22	104 11 25	6	
♄ —— 19.		Noon.	85 54,0	83½	7 30⅙			
	8 16 35	19 55 19	19 33,3	83	8 16	104 4 4	6	Fine weather.
☉ —— 20.		Noon.	87 15,0	83½	8 29¾			
	8 41 9	20 19 26	35 33,7	81	9 15	103 52 55	6	
☽ —— 21.		Noon.	38 34,0	83½	9 27¼			
	8 50 11	20 27 7	37 31,5	83	10 19	103 28 7	6	
♂ —— 22.		Noon.	39 51,2	83	10 28			
	8 59 57	20 34 26	39 22,7	82	11 36	102 46 52	6	
☿ —— 23.		Noon.	88 0,0	83	11 45			
	8 50 5	20 22 55	36 35,0	82	12 49	102 16 24	6	
♃ —— 24.		Noon.	86 17,5	83	13 5⅓			
♀ —— 25.		Noon.	85 33,0	83½	13 28			
	15 29 15	2 54 31	46 52,0	82	13 29	100 17 16	6	
	9 13 25	20 33 51	39 19,0	82½	13 40	99 0 52	6	
♄ —— 26.		Noon.	84 54,0	83	13 44½			
	8 8 51	19 26 40	22 47,3	80	13 48	98 16 42	6	
☉ —— 27.		Noon.	84 22,0	80	13 53¾			
☽ —— 28.	9 9 5	20 8 40	32 48,3	78	15 46	93 32 3	6	
♂ —— 29.		Noon.	81 36,5	79	15 54			
	8 52 22	19 42 28	26 25,3	78	16 42	91 4 6	6	
☿ March 1.		Noon.	80 15,0	78	16 52½			
	8 55 29	19 35 39	24 41,3	78½	17 10	88 29 7	6	

1780.	Time per Watch N° 2.	Apparent Time.	Observed Alt. of the ☉'s L. L.	Therm.	Latitude in.	Longitude in.	N° of Observations.	Remarks.
	H. ′ ″	H. ′ ″	° ′	°	° ′	° ′ ″		
♃ Mar. 2.		Noon.	79 29,0	78	17 15 S	E		Fine weather.
	9 56 56	20 29 2	37 14,3	78½	17 53	86 22 0	6	
♀ —— 3.		Noon.	78 23,0	78	17 58⅓			
	9 22 45	19 46 58	27 8,3	77	18 19	84 18 6	6	
♄ —— 4.		Noon.	77 32,5	79	18 25½			
	17 17 34	20 33 2	37 48,5	77	19 0	82 0 15	6	
☉ —— 5.		Noon.	76 31,5	79	19 3⅓			
	10 29 10	20 36 29	38 27,0	77	19 13	79 51 46	6	
☽ —— 6.		Noon.	75 56,5	79	19 15			
	10 44 42	20 42 41	39 42,0	78	19 33	77 25 30	6	
♂ —— 7.		Noon.	75 13,5	79	19 34½			
	9 59 43	19 50 36	27 22,3	78	20 0	75 33 54	6	
☿ —— 8.		Noon.	74 22,0	79½	20 2⅓			
	10 29 41	20 14 22	32 43,3	78	20 20	73 53 18	6	
♃ —— 9.		Noon.	73 39,0	77	20 21⅓			
	10 13 40	19 51 8	27 9,2	77	20 36	71 58 12	6	
♀ —— 10.		Noon.	72 58,0	79	29 29⅙			
	11 5 21	20 34 5	36 52,8	79	20 47⅓	69 45 22	6	
♄ —— 11.		Noon.	72 24,0	79½	20 49½			
	17 46 12	3 12 51	39 48,0	79	20 51⅓	69 8 28	6	
	11 15 36	20 35 28	36 58,5	79	21 5	67 20 39	6	
☉ —— 12.		Noon.	71 41,5	80½	21 8¼			
	18 21 8	3 28 31	33 43,2	79	21 11	66 41 3	4	
	10 19 24	19 31 54	21 54,0	79	21 24	65 5 9	6	
☽ —— 13.		Noon.	70 58,0	80	21 28			
	19 17 37	4 26 7	22 34,2	78½	21 31	64 20 58	6	
	10 40 56	19 44 9	24 47,2	79	21 55	62 57 10	6	
♂ —— 14.		Noon.	69 58,0	79½	22 3¼			
	11 15 44	20 11 0	30 37,0	77	22 35	60 50 46	6	
☿ —— 15.		Noon.	68 58,0	79½	22 40¼			
	19 42 22	4 35 34	19 57,0	77	22 45	60 17 13	6	
	11 54 1	20 43 34	37 33,0	78	23 10	59 17 34	6	
♃ —— 16.		Noon.	60 1,0	80	23 13½			
	11 21 51	20 2 38	27 41,3	77	25 1	56 52 12	6	
♄ —— 18.		Noon.	65 17,0	78	25 10¾			
	12 5 39	20 37 38	34 46,0	79	26 2	54 32 37	6	
☉ —— 19.		Noon.	63 54,0	78½	26 9⅙			
	11 22 49	19 48 7	23 47,5	77	26 30	52 45 18	4	
☽ —— 20.		Noon.	63 4,0	78	26 35¾			
	12 10 54	20 26 41	31 37,3	77	27 16	50 15 3	6	
♂ —— 21.		Noon.	61 54,0	78	27 22			
	11 39 31	19 45 53	22 34,3	79	28 0	47 44 22	6	
☿ —— 22.		Noon.	60 44,5	78	28 8½			
	12 1 24	19 55 41	24 20,3	77½	28 24	44 38 9	6	
♃ —— 23.		Noon.	60 1,0	78½	28 27⅓			
	11 59 15	19 41 43	21 0,8	77	29 3	41 33 25	6	

1780.	Time per Watch N° 2.	Apparent Time.	Observed Alt. of the ☉'s L. L.	Therm.	Latitude in.	Longitude in.	N° of Observations.	Remarks.
	H. ′ ″	H. ′ ″	° ′		° ′	° ′ ″		
♀ Mar. 24.		Noon.	58 56,0	77	29 8⅔ S	E		Fine weather.
	11 55 46	19 27 45	17 44,0	78	29 33	38 49 3	6	
♄ —— 25.		Noon.	58 3,0	77	29 38			
	12 13 1	19 36 31	19 10,2	78	30 20	36 34 7	6	
☉ —— 26.		Noon.	56 50,0	76	30 27⅔			
	11 52 9	19 10 11	13 20,0	75	30 56	35 6 12	6	
☽ —— 27.		Noon.	25 51,0	76	31 3⅚			
♂ —— 28.	13 22 40	20 29 13	28 40,5	72½	31 31	31 58 4	6	
☿ —— 29.		Noon.	54 44,0	74	31 23			
	11 53 52	19 53 3	22 16,0	73	31 5	31 0 28	6	
♃ —— 30.		Noon.	54 41,0	74	31 2¾			
♀ —— 31.		Noon.	53 58,0	74	31 22¼			
	13 49 5	20 42 34	30 10,5	74	32 6	28 19 42	6	
♄ April 1.		Noon.	52 45,0	75	32 12⅓			
	12 56 19	19 43 49	18 11,3	76	33 19	26 43 0	4	
☉ —— 2.		Noon.	51 6,0	77	33 28⅙			
	13 25 3	20 2 10	20 52,5	76	34 58	24 0 16	5	
☽ —— 3.		Noon.	49 10,0	77	35 1			
	13 29 11	19 57 31	19 36,3	73	35 20	21 41 15	5	
♂ —— 4.		Noon.	48 24,0	70	35 24⅙			
	13 49 51	20 12 3	21 42,0	74	36 8	20 2 58	6	
☿ —— 5.		Noon.	47 13,0	76	36 12¼			
	13 21 25	19 41 48	15 57,3	76	35 56	19 28 43	6	
♃ —— 6.		Noon.	47 14,0	77	35 48¾			
	14 17 13	20 32 54	25 19,5	76	35 14	18 10 19	6	
♀ —— 7.		Noon.	47 27,5	77	35 12½			
	13 41 22	19 56 13	18 33,0	76	34 54	17 50 51	6	
♄ —— 8.		Noon.	47 18,0	73	34 59⅔			
☉ —— 9.		Noon.	46 49,0	70	35 6¼			
	20 55 20	3 8 7	28 4,7	67	35 3	17 11 15	6	
☽ —— 10.		Noon.	46 56,0	67½	34 37⅚			
♂ May 9.		Noon.	37 53,5	72	34 21⅙			
☿ —— 10.		Noon.	37 11,0	65	34 47¾			
	13 41 38	19 56 25	11 39,3	63	34 40	17 48 16	6	
♃ —— 11.		Noon.	37 22,0	64	34 21¾			
♀ —— 12.	13 51 28	20 1 55	13 19,7	63	32 42	16 35 24	6	
♄ —— 13.		Noon.	38 41,0	67	32 32¾			
	21 49 6	3 58 14	13 31,0	62	32 27	16 15 0	6	
	14 6 33	20 10 23	15 13,5	63	31 33	14 48 29	6	
☉ —— 14.		Noon.	39 40,0	64	31 19¼			
	14 1 2	19 49 42	12 10,0	63	30 8	11 3 58	6	
☽ —— 15.		Noon.	40 52,0	64	29 53			
	21 49 18	3 34 20	18 49,8	64	29 41	10 8 48	6	
	14 5 11	19 42 49	11 23,5	64½	28 50	8 16 10	6	
♂ —— 16.		Noon.	41 53,0	67	28 38⅚			
	15 4 55	21 33 35	30 49,7	65	27 41½	5 59 34	6	

1780.	Time per Watch N° 2.	Apparent Time.	Observed Alt. of the ☉'s L. L.	Therm.	Latitude in.	Longitude in.	N° of Observations.	Remarks.
	H. ′ ″	H. ′ ″	° ′	°	° ′	° ′ ″		
☿ May 17.		Noon.	42 44,0	68	27 33½ S	E		Fine weather.
	14 34 4	19 54 43	14 29,0	67	26 40	3 57 27	6	
♃ —— 18.		Noon.	43 34,5	69	26 29¾			
	14 44 24	19 56 20	15 14,5	69½	25 34	1 44 51	6	
♀ —— 19.		Noon.	44 27,5	70	25 24			
	14 30 3	19 35 14	11 29,3	70½	24 36½	0 2 3	6	
♄ —— 20.		Noon.	45 14,0	71	24 25			
	15 0 22	19 58 21	16 25,3	68½	23 34	1 47 24 W	6	
☉ —— 21.		Noon.	46 3,0	71	23 23¾			
	15 5 53	19 55 52	16 26,2	70	22 26	3 48 33	6	
☽ —— 22.		Noon.	46 58,0	72	22 17			
	16 10 18	20 53 9	28 0,4	71	20 59	5 36 54	6	
♂ —— 23.		Noon.	48 15,3	70	20 48			
	16 20 28	20 55 37	29 6,3	71	19 45	7 33 51	6	
☿ —— 24.		Noon.	46 16,0	72	19 36⅓			
	15 2 0	19 30 40	13 1,0	71	18 25	9 12 0	6	
♃ —— 25.		Noon.	50 31,5	72	18 10⅓			
	23 57 17	4 23 23	14 27,3	73	17 56	9 50 45	6	
	16 28 55	20 50 53	29 44,0	71½	17 0	10 55 40	6	
♀ —— 26.		Noon.	51 41,0	73	16 50½			
♄ —— 27.	23 39 45	3 56 5	21 2,5	71	15 45	12 21 25	6	
	15 22 8	19 35 46	15 26,3	69	15 5	13 4 28	6	
☉ —— 28.		Noon.	53 15,0	72	14 56¾			
	16 41 41	20 52 16	31 17,7	74	14 25	13 50 33	6	
☽ —— 29.		Noon.	53 44,0	77	14 18¾			
	16 55 25	21 2 57	33 38,5	78	13 47	14 34 7	6	
♂ —— 30.		Noon.	54 14,0	79	13 39¾			
	17 3 58	21 7 26	34 58,7	78	12 52	15 35 36	6	
☿ —— 31.	15 49 28	19 49 12	19 31,0	79	12 3	16 31 33	6	
♃ June 1.		Noon.	55 43,0	80	11 54			
	16 0 43	19 57 28	21 34,5	79	11 20	17 16 27	6	
♀ —— 2.		Noon.	56 14,5	78	11 15			
	16 11 45	20 6 46	23 48,0	75	10 44	17 42 33	6	
♄ —— 3.		Noon.	56 46,0	79	10 36⅙			
	16 11 18	20 2 2	23 10,2	78	9 54	18 46 19	6	
☉ —— 4.		Noon.	57 31,5	79	9 43¾			
	15 48 56	19 33 31	17 33,0	79	9 1	20 18 27	6	
☽ —— 5.		Noon.	58 18,3	80	8 50½			
	16 12 14	19 51 25	21 41,2	79	8 7	21 39 39	6	
♂ —— 6.		Noon.	59 10,0	81	7 52¾			
	16 20 39	19 54 3	22 52,3	79	6 45	23 5 31	6	
☿ —— 7.		Noon.	6 24,0	80	6 33 1/10			
	0 22 9	3 53 42	25 45,0	81	6 17	23 33 13	6	
	16 13 10	19 41 33	20 49,3	80	5 11	24 20 22	6	
♃ —— 8.		Noon.	62 1,5	81	4 40¼			
	0 40 45	4 7 31	23 31,7	81	4 32	24 44 19	6	

1780.	Time per Watch N° 2.	Apparent Time.	Observed Alt. of the ☉'s L. L.	Therm.	Latitude in.	Longitude in.	N° of Observations.	Remarks.
	H. ′ ″	H. ′ ″	° ′	°	° ′	° ′ ″		
♃ June 8.	16 19 51	19 43 25	21 58,7	80	3 29 S	25 32 6W	6	Fine weather.
♀ —— 9.		Noon.	63 36,0	81	3 11			
	0 53 39	4 15 39	22 25,5	80	2 56	25 55 9	6	
	16 6 1	19 25 2	18 34,8	79	1 52	26 37 19	6	
♄ —— 10.		Noon.	65 2,0	81	1 40½			
	1 7 38	4 25 58	20 44,3	80	1 27	26 49 42	6	
	17 31 39	20 49 24	37 49,5	79	0 32	26 58 13	6	
☉ —— 11.		Noon.	66 29,0	81	0 19½			
☽ —— 12.		Noon.	68 11,0	85	1 36½ N			
	15 45 8	19 1 33	15 22,5	82	3 30	27 16 52	6	
♂ —— 13.		Noon.	70 19,0	83	3 47½			
	15 35 49	18 54 0	13 56,0	80	4 14	26 49 30	6	
☿ —— 14.	16 21 41	19 41 17	24 58,6	79½	4 52	26 27 48	6	
♃ —— 15.		Noon.	71 23,5	80½	4 57⅓			
	15 39 47	18 59 24	15 32,3	81½	5 12	26 24 48	5	
♀ —— 16.		Noon.	71 50,0	81½	5 25¾			
	16 5 28	19 24 36	21 43,0	79	6 17	26 33 4	5	
♄ —— 17.		Noon.	72 48,5	81	6 25¾			
☉ —— 18.		Noon.	73 30,0	81½	7 8½			
	16 2 22	19 13 6	19 0,3	80	7 20	28 37 19	6	
☽ —— 19		Noon.	73 45,0	79½	7 24⅓			
	17 30 2	20 40 21	39 39,5	79	8 3	28 42 55	6	
♂ —— 20.		Noon.	74 27,5	81	8 9½			
	17 42 22	20 54 12	43 14,3	79	9 5	28 19 12	6	
☿ —— 21.		Noon.	75 31,5	81	9 11⅓			
	16 16 39	19 27 34	23 31,7	79½	9 17	28 32 10	6	
♃ —— 22.		Noon.	75 40,5	81½	9 19			
	16 1 18	19 7 10	18 58,3	79½	9 36	29 47 13	6	
♀ —— 23.		Noon.	76 6,0	79	9 44⅙			
	17 27 59	20 29 44	38 11,2	79	10 28	30 47 49	6	
♄ —— 24.		Noon.	76 59,0	80	10 36			
	16 50 56	19 50 20	29 33,3	79½	11 33	31 22 34	6	
☉ —— 25.		Noon.	78 9,0	80½	11 44			
	16 26 7	19 21 0	23 14,3	79	12 42	32 29 12	6	
☽ —— 26.		Noon.	79 21,0	80	12 54			
	17 27 48	20 17 38	36 35,8	79	13 52	33 44 50	6	
♂ —— 27.		Noon.	80 31,2	80	14 1¾			
	17 30 9	20 15 41	36 34,3	78	15 12	34 48 18	6	
☿ —— 28.		Noon.	81 57,0	79	15 24½			
	18 36 13	21 18 43	51 18,5	78	16 46	35 32 52	6	
♃ —— 29.		Noon.	83 32,0	79	16 56⅙			
	17 4 26	19 41 44	29 39,7	78½	18 6	36 50 34	6	
♀ —— 30.		Noon.	85 1,5	79	18 21¾			
	18 17 1	20 47 34	45 37,0	77½	19 49	38 31 15	6	
♄ July 1.		Noon.	86 46,5	78	20 3⅔			
	16 23 6	18 50 23	19 0,0	79	21 6	39 17 15	6	

1780.	Time per Watch N° 2.	Apparent Time.	Observed Alt. of the ☉'s L. L.	Therm.	Latitude in.	Longitude in.	N° of Observations.	Remarks.
	′ ″	H. ′ ″	° ′	°	° ′	° ′ ″		
☉ July 2.		Noon.	88 9,0	80	21 20½ N	W		Fine weather.
	17 14 38	19 40 41	30 33,0	79	22 58	39 35 33	6	
☽ —— 3.		Noon.	89 35,0	80	22 41½	—		Cloudy hazy weather.
♂ —— 4.		Noon.	88 35,0	79	24 3			
	1 42 14	4 4 39	34 12,0	77	24 16	40 29 27	6	
☿ —— 5.		Noon.	87 7,0	79½	25 25⅓			
	18 11 13	20 27 54	41 48,0	78	26 41	41 55 10	6	
♃ —— 6.		Noon.	85 33,0	77	26 53			
	1 0 50	3 16 54	45 11,7	78	27 1	42 4 39	6	
	19 10 26	21 24 29	54 23,0	79	27 53	42 25 20	6	Fine weather.
♀ —— 7.		Noon.	84 21,0	80	27 58⅓			
	2 2 18	4 16 11	32 18,3	79½	28 8	42 37 16	6	
	18 16 59	20 29 38	42 20,8	80	28 49	42 55 43	6	
♄ —— 8.		Noon.	83 14,0	81	28 58½			
	17 19 33	19 31 22	29 46,5	80	29 25	43 8 27	6	
☉ —— 9.		Noon.	82 32,0	79	29 33¾			
	1 21 56	3 34 5	41 32,4	79	29 34	43 2 22	6	
	17 15 31	19 27 23	28 55,7	79½	29 42	43 7 55	6	
☽ —— 10.		Noon.	82 13,0	80½	29 44½			
	16 59 39	19 11 11	25 35,5	81	30 29	43 13 12	6	
♂ —— 11.		Noon.	81 15,5	83	30 45½			
	17 38 29	19 49 9	33 45,7	80	31 55	43 26 58	6	
☿ —— 12.		Noon.	79 30,5	80½	32 10⅓			
	17 25 34	19 35 59	31 4,7	79	33 6	43 31 15	5	
♃ —— 13.		Noon.	78 15,0	80½	33 17			
	17 7 39	19 19 56	27 53,0	80	34 26	43 4 31	6	
♀ —— 14.		Noon.	76 47,0	81	34 35¾			
	18 6 12	20 19 14	39 58,3	78	35 26	42 56 6	6	
♄ —— 15.		Noon.	75 42,5	78½	35 31⅙			
	17 29 46	19 42 14	32 23,7	77	35 46	43 3 36	6	
☉ —— 16.		Noon.	75 15,0	79	35 48			
	17 0 25	19 14 52	26 50,2	78	36 6	42 36 49	6	
☽ —— 17.		Noon.	74 41,5	78	36 11¼			
	18 5 45	20 24 8	40 40,5	77½	36 30⅔	41 39 58	6	
♂ —— 18.		Noon.	74 6,0	78	36 36⅙			
	18 8 27	20 31 3	41 55,7	78	36 59	40 37 13	6	
☿ —— 19.		Noon.	73 21,0	79	37 9¾			
	18 4 26	20 30 55	41 44,0	78	37 42	39 40 33	6	
♃ —— 20.		Noon.	72 32,5	77	37 47⅓			
	18 24 37	20 55 44	46 29,0	76	37 42	38 33 0	6	
♀ —— 21.		Noon.	72 21,5	78	37 46¾			
	16 25 23	18 53 48	22 28,0	77½	38 10	39 15 22	6	
♄ —— 22.		Noon.	71 36,0	78	38 20⅙			
	16 29 1	18 56 7	22 51,0	76	38 30	39 36 34	6	
☉ —— 23.		Noon.	71 8,5	77½	38 35¼			
	18 12 13	20 41 18	43 10,7	77	38 41	39 4 0	6	

1780.	Time per Watch No 2.	Apparent Time.	Observed Alt. of the ☉'s L. L.	Therm.	Latitude in.	Longitude in.	No. of Observations.	Remarks.
	H. ′ ″	H. ′ ″	° ′		° ′	° ′ ″		
☽ July 24.		Noon.	70 49,5	77	38 41½ N	W		Fine weather.
	16 26 24	18 57 7	22 53,2	78	38 42	38 44 21	6	
♂ —— 25.	16 45 25	19 19 13	27 0,0	77	38 56	38 3 0	6	
☿ —— 26.		Noon.	70 6,5	78	38 58			
	18 56 27	21 38 31	52 55,3	77	40 8	36 1 33	6	
♃ —— 27.		Noon.	68 34,5	77	40 16¼			
	15 42 8	18 31 58	17 [illegible]8,7	76	40 55	34 7 13	6	
♀ —— 28.		Noon.	67 14,0	77	41 12¾			
	16 41 20	19 42 15	30 59,2	76	42 2	31 23 58	6	
♄ —— 29.		Noon.	66 7,0	74½	42 15¾			
	16 42 12	19 51 49	32 30,7	73	43 12	29 16 21	6	
☉ —— 30.		Noon.	64 50,5	74½	43 17¾			
	15 40 20	18 52 14	21 32,5	74	43 21	28 42 42	6	
☽ —— 31.		Noon.	64 26,0	75	43 27¼			
	16 6 11	19 21 37	26 41,8	74	43 54	27 53 7	6	
♂ Aug. 1.		Noon.	63 37,0	75	44 1			
	15 46 49	19 5 24	23 37,8	73	44 22	27 9 15	6	
☿ —— 2.		Noon.	62 55,0	75½	44 27½			
	15 54 38	19 19 41	26 0,0	73	44 46	25 35 36	6	
♃ —— 3.		Noon.	62 15,5	75	44 51½			
	0 41 52	4 8 48	31 29,3	74½	44 55	25 8 36	6	
	16 6 35	19 36 9	28 42,3	74	45 8	24 31 48	6	
♀ —— 4.		Noon.	31 39,0	75	45 12			
	1 30 38	5 2 57	21 46,0	74	45 18	23 51 51	6	
	15 53 38	19 31 23	27 38,5	70	45 46	22 32 46	6	
♄ —— 5.		Noon.	60 43,5	70½	45 51¼			
	15 53 16	19 34 59	28 1,2	70	46 25	21 37 24	6	
☉ —— 6.		Noon.	59 47,0	73	46 31¼			
	0 56 57	4 39 24	25 27,3	72	46 46	21 27 45	6	
	15 36 18	19 20 46	25 15,8	69	48 19	21 0 4	6	
☽ —— 7.		Noon.	57 11,0	72	48 49⅓			
♂ —— 8.	16 14 48	20 17 1	33 13,2	70	51 9	16 42 34	6	
☿ —— 9.		Noon.	54 9,0	71	51 18			
♃ —— 10.		Noon.	53 21,5	70	51 47¾			
	0 31 38	4 29 46	25 39,7	61	51 56	17 50 15	6	
♀ —— 11.		Noon.	52 23,0	61	52 20¼			
	0 5 59	4 0 8	29 32,7	61	52 41	18 54 33	6	
♄ —— 12.		Noon.	51 39,0	60	52 54⅓			
	15 4 34	18 59 50	20 21,5	61	52 49½	18 45 55	6	
☉ —— 13.		Noon.	61 25,0	61	52 49¾			
	0 21 45	4 20 13	26 13,2	59	52 52	18 0 0	6	
	14 52 8	18 50 25	18 41,5	59	53 11	18 4 22	6	
☽ —— 14.		Noon.	50 29,0	60	53 28⅓			
	16 44 16	20 42 19	34 4,5	61	54 20	18 15 0	6	
♂ —— 15.		Noon.	49 10,0	63	54 27½			
	14 49 19	18 49 20	17 58,5	61	55 4	17 50 42	6	

1780.	Time per Watch N° 2.	Apparent Time.	Observed Alt. of the ☉'s L. L.	Therm.	Latitude in.	Longitude in.	N° of Observations.	Remarks.
	H. ′ ″	H. ′ ″	° ′		° ′	° ′ ″		
☿ Aug. 16.		Noon.	48 2,0	64½	55 16½ N	W		Fine weather.
	16 38 21	20 46 8	33 13,7	61	56 0	16 0 0	6	
♃ —— 17.		Noon.	46 54,5	63	56 4¾			
	15 12 16	19 24 38	22 15,7	61	56 11	14 56 45	6	
♀ —— 18.		Noon.	46 29,5	66	56 10⅓			
	15 0 19	19 18 49	21 9,2	65	56 26	13 30 46	6	
♄ —— 19.		Noon.	45 33,0	66	56 47⅓			
☉ —— 20.	14 39 3	19 22 52	20 43,2	61½	58 44	7 22 46	6	
☽ —— 21.		Noon.	42 46,0	62	58 54⅙			
			Z.D.U.L.					
♃ —— 24.		Noon.	49 47,0	62	58 56⅓			At Strumness in the Orkneys.
♄ —— 26.		Noon.	48 30,8	63	58 35½			
	22 22 18	3 14 34	60 39,8	63		5 49 10	6	

OBSERVATIONS

OF THE

MOON'S Diſtance from the SUN and FIXED STARS,

FOR

DETERMINING THE LONGITUDE AT SEA;

Made on Board His MAJESTY'S SLOOP DISCOVERY,

IN HER LATE VOYAGE ON DISCOVERIES,

IN THE YEARS 1776, 77, 78, 79, and 80,

BY WILLIAM BAYLY.

1776.	Time per Watch N° 2.	Altitude of the ☉'s L. L. or ✳.	Moon's Altitude.	Distance of the ☽'s Limb from the ☉'s or ✳.	Latitude of the Ship.	Longitude of the Ship.	Barom.	Therm.	N° of Obs.	Objects.
	H. ′ ″	° ′	° ′	° ′ ″	°	° ′ ″	′	°		
☉ Aug. 4.	22 49 18	52 24	10 9 U	105 18 12	46 47 N	8 12 0 W	30,30	66	4	☽ à Sun.
☽ —— 5.	22 48 8	53 1⅔	22 58⅓	91 13 52	44 53	9 15 0	30,17	62	6	Do.
♂ —— 6.	22 18 49	49 4	40 19½	79 38 37	43 8	10 33 45	30,30	64	4	Do.
☿ —— 7.	21 22 7	39 13¼	60 16½	67 23 22	41 33	11 4 52	30,32	66	4	Do.
☽ —— 19.	7 7 13	9 4½	46 19⅔ L	60 5 15	27 39	20 29 30	30,11	73	6	Do.
♂ —— 20.	4 22 45	46 0¾	47 59½	70 33 14	23 56	21 43 20	30,08	77	6	Do.
☿ —— 21.	4 37 19	43 13⅙	41 59⅔ U	81 58 27	22 20	21 9 20	30,07	76	6	Do.
♃ —— 22.	5 37 29	29 55	42 11⅙	93 54 9	21 47	22 19 15	30,07	76	6	Do.
♂ —— 27.	9 0 3	41 51⅓	31 7¼	68 9 13	15 32	33 31 0	30,00	78	6	☽ à Antares.
	11 42 54	15 22	55 28¼	78 58 25	15 27	23 30 30	30,00	78½	4	Do.
☿ Sept. 4.	21 54 13	43 58	51 29	84 26 39	6 36	18 41 7	30,07	79½	4	☽ à Sun.
♃ —— 5.	21 31 47	51 38	52 55⅙	72 7 48	5 30	17 0 35	30,08	79	6	Do.
♄ —— 7.	23 53 0	74 56½	54 25⅔	48 28 35	4 25	13 47 0	30,07	78½	6	Do.
♂ —— 17.	3 45 36	46 10¾	76 29⅓	51 47 47	0 15 S	13 53 0	30,07	77	6	Do.
☿ —— 18.	2 16 12	69 13	47 7⅔	62 54 4	0 58	14 35 20	30,10	76½	6	Do.
	9 11 26	79 48	28 27⅔	59 39 52	1 20	14 56 0	30,10	75	6	☽ à Aquila.
♄ —— 21.	4 20 43	41 23½	36 51⅓	99 5 10	3 49	18 28 40	30,10	75½	6	☽ à Sun.
☽ —— 23.	4 44 7	37 12⅓	15 57⅓	124 55 47	7 0	20 23 40	30,08	76	6	Do.
♃ Oct. 3.	20 26 44	15 31⅓	44 39⅓	90 59 8	21 40	24 37 37	30,25	69	6	Do.
♀ —— 4.	21 12 7	26 5	45 18	79 4 4	23 7	24 25 22	30,17	71	6	Do.
☉ —— 6.	20 58 17	23 58	45 18⅔	56 32 44	25 50	23 31 36	30,27	69½	6	Do.
♀ —— 18.	1 45 42	59 20	45 32	67 34 41	32 55	9 28 43	30,10	64	6	Do.
☉ —— 20.	3 21 1	36 58⅓	47 48½	92 47 50	33 42	2 22 58	30,10	57	6	Do
☽ —— 21.	4 27 24	22 45	49 58½	106 56 0	33 44	0 46 15	30,14	59	6	Do.
♄ Nov. 2.	18 24 3	29 54	35 17⅙	88 30 32	33 0	15 23 10 E	30,12	63⅓	6	Do.
☉ —— 3.	18 31 47	31 41	40 19	77 16 48	33 3	15 14 25	29,96	64½	10	Do.
♂ —— 5.	18 41 23	33 39⅓	46 35	55 20 23	34 16	14 37 30	30,14	63	6	Do.
♃ Dec. 5.	18 46 48	43 58	54 12½	53 53 53	38 51	23 29 10	29,45	61	6	Do.
♄ —— 14.	1 52 54	25 33½	51 49½ L	42 56 28	47 56	44 34 37	30, 0	44	6	Do.
☽ —— 30.	16 16 15	48 24⅔	9 11⅓ U	108 34 0	49 11	73 39 20	29,58	38	6	Do.
♂ —— 31.	16 10 17	50 15½	17 6⅓	47 44 38	48 33	76 53 0	30,00	39	5	Do.
1777.										
♂ Jan. 14.	17 12 49	60 47	33 37	60 2 15	47 10	117 15 0	29 75	48	6	Do.
	18 42 30	49 29⅓	44 3½	60 39 18	47 14	117 30 34	29,25	48	6	Do.
	19 11 50	44 47½	46 16¾	60 50 50	47 13	117 32 12	29.25	47½	6	Do.
♀ —— 17.	19 3 32	38 30½	23 36¾	100 31 39	44 15	128 19 6	29.86	55	6	Do.
	19 38 53	32 4½	27 49	100 45 38	44 14	128 39 39	29,86	55	6	Do.
	20 8 2	26 52½	30 36½	100 57 41	44 14	128 29 30	29,87	56	6	Do.
♄ —— 18.	19 32 14	31 25	18 19¾	113 40 8	44 12	132 35 52	29,67	55	6	Do.
♂ —— 21.	22 57 4	30 28⅓	20 25½ L	28 43 3	43 25	142 48 45	30.07	54	6	☽ à Aldebaran.
	11 11 41	16 36	21 25⅓	13 34 21	43 25	142 47 0	30,07	54	6	☽ à Jupiter.
♃ —— 23.	0 52 24	20 4	22 46⅓	55 44 31	43 47	146 45 0	30 32	53	6	☽ à Aldebaran.
♄ —— 25.	0 50 29	17 51	19 36¾	37 44 56	43 41	147 7 30	30,20	56	6	Do.
	1 40 44	16 50⅔	25 4⅓	52 43 16	43 41	146 54 34	30.20	56	5	☽ à Spica.
☿ —— 29.	10 53 29	41 46	21 17 Cr	109 52 38	43 20⅓	147 25 0	30.14	64	6	☽ à Sun. } In Adv.
	11 23 47	46 55⅔	16 8	109 41 2	43 20⅓	147 55 0	30,14	64	6	☽ à Sun. } Bay.
♃ —— 30.	9 38 59	29 39¾	41 8⅔ U	99 27 10	43 26½	149 25 55	30.21	57	6	Do.
☉ Feb. 2.	13 26 48	61 47	19 37⅔	75 51 8	44 41	155 7 7	30.00	51	6	Do.
♂ —— 11.	16 40 50	27 46	45 25⅓ L	40 47 31	40 36	173 8 24	30,19	53½	6	Do.
	20 8 11	31 8	11 34	60 53 30	40 30	173 43 52	30 00	0	4	☽ à Aldebaran.
☽ —— 24.	7 25 1	20 29	33 11 U	120 27 0	41 26	176 50 45	30,00	56	6	☽ à Sun.
♄ March 1.	7 7 26	18 38¾	53 22¾	98 27 15	42 29	179 54 22	29.95	56	6	Do.

1777.	Time per Watch N° 2.	Altitude of the ☉'s L. L. or ✱.	Moon's Altitude.	Distance of the ☽'s Limb from the ☉'s or ✱.	Latitude of the Ship.	Longitude of the Ship.	Barom.	Therm.	N° of Obs.	Objects.
	H. ′ ″	° ′	° ′	° ′ ″	° ′	° ′ ″	″	°		
♄ March 1.	7 43 2	25 4	47 50 U	98 16 6	42 28 S	179 49 23 E	29, 95	66	6	☽ à Sun.
☽ —— 3.	9 31 30	46 2½	45 46	74 36 20	41 36	184 34 15	29, 61	59	3	Do.
♂ —— 4.	10 2 26	51 46	48 42	62 18 56	40 3	187 3 24	29, 90	63	6	Do.
	10 32 17	54 9⅓	43 20½	62 8 24	40 3	187 21 40	29, 90	63	6	Do.
☉ —— 16.	13 47 51	33 18⅓	24 34⅕	87 50 28	33 37	198 46 18	30, 04	72	6	Do.
♀ —— 21.	17 41 53	33 27	31 40¾	39 8 20	37 20	201 23 9	30, 00	68	6	☽ à Pollux.
	18 28 7	17 24	38 37¾	51 22 46	37 19	201 41 39	30, 00	68	6	☽ à Spica.
☉ —— 23.	19 21 57	31 55	40 42½ L	27 20 22	25 38	201 4 27	30, 03	73	6	Do.
	19 38 53	28 19	43 56½	63 50 46	25 28	201 21 0	30, 03	73	6	☽ à Pollux.
☽ —— 24.	16 41 21	35 32	20 33¾	75 13 18	25 10	201 19 30	30, 02	73½	6	Do.
	19 2 48	13 33	49 21¼	60 4 21	25 5	200 37 27	30, 02	73	6	☽ à Antares.
♂ —— 25.	17 18 20	49 11	21 45¾	52 0 51	24 15	201 21 39	30, 02	74	6	☽ à Regulus.
	19 5 27	14 37	44 58⅓	48 17 32	24 14	201 8 55½	30, 02	74	6	☽ à Antares.
☉ —— 30.	3 53 39	14 38	57 46½	107 10 46	20 43	201 57 16½	30, 05	81	6	☽ à Sun.
☽ —— 31.	5 26 5	35 21⅓	48 39⅔	95 6 3	20 1	201 34 10½	30, 06	82	6	Do.
	5 43 42	39 9⅙	44 43	94 59 2	20 1	201 33 18	30, 06	82	6	Do.
♂ April 1.	8 2 11	62 52⅔	57 36	82 6 45	20 2	201 37 0	30, 04	84	6	Do.
☿ —— 2.	2 26 31	58 18	65 20½	54 48 5	20 2	201 56 30	30, 00	80	6	☽ à Antares,
	5 42 30	38 34⅔	69 24⅔	70 34 14	20 2	201 53 45	30, 05	83	6	☽ à Sun.
	6 13 52	45 5⅔	62 12⅓	70 23 33	20 2	201 38 19	30, 05	83	6	Do.
♃ —— 3.	5 47 49	39 37⅓	80 35	57 37 52	20 2	201 42 15	30, 01	83	6	Do.
☿ —— 16.	12 49 42	26 41	25 14½	105 55 21	18 8	196 3 12	30, 04	79½	6	Do.
	13 5 36	28 9⅔	27 21	105 59 16	18 8	196 35 52½	30, 04	79	6	Do.
	13 18 55	20 11⅔	30 57	106 3 59	18 8	191 15 31½	30, 04	78½	6	Do.
	16 5 41	17 13	51 39⅓	67 21 48	18 8	196 9 15	30, 02	79½	6	☽ à Aldebaran.
	16 22 1	27 43	53 23	67 5 15	18 8	196 2 0	30, 02	79½	5	☽ à Spica Virg.
♀ —— 18.	16 19 48	38 29	50 46	48 8 27	18 0	195 43 30	30, 02	81	6	☽ à Pollux.
	16 40 24	33 46½	53 55½	42 34 40	18 0	195 52 15	30, 02	81	6	☽ à Spica.
♀ May 2.	8 1 30	45 47½	59 12½	61 43 20	20 3	184 53 45	30, 00	78	3	☽ à Sun.
♄ —— 3.	7 32 15	41 4½	72 28	48 16 27	20 15	184 57 48	30, 10	82½	6	Do.
	7 45 7	43 10½	70 30	48 10 52	20 15	184 34 25½	30, 10	82½	6	Do.
♂ —— 13.	11 25 5	44 2	22 4⅙	75 14 54	20 15	185 8 18	30, 04	79	6	Do.
	11 46 42	40 54⅓	26 6¾	75 23 2	20 15	184 55 24	30, 04	79	6	Do.
	13 30 16	22 16⅙	42 50⅙	75 55 2	20 15	184 49 24	30, 02	78	6	Do.
	16 20 15	41 15	46 30	71 7 47	20 15	185 18 10½	30, 01	76	6	☽ à Spica.
☿ —— 14.	13 9 45	26 9	34 9⅓	87 37 46	20 0	184 29 45	30, 06	78	6	☽ à Sun.
♃ —— 15.	12 48 36	30 16⅔	23 6	98 58 39	19 46	184 59 0	30, 04	78	6	Do.
	13 14 38	25 18⅙	28 47⅔	99 6 9	19 46	184 58 0	30, 04	78	6	Do.
	17 0 33	22 19	56 25½	44 50 57	19 45	184 50 3	30, 07	77	6	☽ à Pollux.
	17 23 5	57 54	55 38⅓	45 51 13	19 45	185 9 15	30, 08	77	6	☽ à Spica.
♀ —— 16.	13 42 45	19 22¾	27 30	110 26 45	19 40	185 8 7½	30, 07	77½	6	☽ à Sun.
☉ —— 18.	17 45 14	27 48	64 12¾	55 41 41	19 46	185 52 34½	30, 10	78	6	☽ à Antares.
	17 53 14	46 30½	65 25⅛	45 16 0	19 46	185 29 15	30, 10	78	6	à ☽ Regulus.
☽ —— 19.	18 45 30	36 35½	72 11⅔	57 27 38	19 46	185 48 39	30, 11	77	6	Do.
	19 1 30	45 49	73 10⅓	43 33 45	19 46	186 1 3	30, 11	77	6	☽ à Antares.
☿ —— 28.	8 4 8	41 51	19 22⅓	104 37 9	19 51	185 17 4½	30, 04	81	6	☽ à Sun.
☉ June 1.	5 30 26	14 35⅔	63 57¼	52 33 15	19 53	185 23 25½	30, 04	73½	6	Do.
	6 5 43	27 32½	66 42	52 21 38	19 53	184 39 27	30, 04	73½	6	Do.
	8 26 5	43 23	52 45	51 32 26	19 53	184 48 33	30, 04	73½	6	Do.
	10 49 59	44 50	21 22	50 30 40	19 53	184 34 10½	30, 04	73½	6	Do.
☽ —— 2.	5 47 53	18 2⅔	54 37	38 31 40	19 53	184 41 30	30, 14	75	6	Do.
♀ July 25.	5 18 18	15 16	32 59	111 53 0	26 4	193 7 55	30, 10	72	6	Do.

At Annamocka.

1777.	Time per Watch N° 2.	Altitude of the ☉'s L. L. or ✳.	Moon's Altitude.	Distance of the ☽'s Limb from the ☉'s, or ✳.	Latitude of the Ship.	Longitude of the Ship.	Barom.	Therm.	N° of Obs.	Objects.
	H. ′ ″	° ′	° ′	° ′ ″	° ′	° ′ ″		°		
♄ July 26.	5 55 52	22 48⅔	31 21⅓ U	98 7 0	26 42 S	194 2 27 E	30,20	69	3	☽ à Sun.
♀ Aug. 8.	11 13 53	30 11⅓	63 42⅙	53 3 53	23 48	210 3 39	30,20	67	5	Do.
	11 31 26	26 53	64 34⅓	53 7 26	23 48	210 26 25	30,20	67	3	Do.
☽——11.	11 9 55	30 15⅙	53 22⅔	86 14 31	19 4	211 38 52	30,16	75	6	Do.
	11 26 54	29 53⅓	57 18	86 19 50	19 4	211 4 15	30,16	75	3	Do.
♂ Dec. 9.	11 49 35	39 14	35 10	104 31 29	15 36	207 41 37	30,00	82	6	Do.
	12 3 41	35 52	39 28	104 36 45	15 36	207 56 15	30,00	82	6	Do.
☿——10.	12 29 25	29 54	31 17	118 4 26	14 26	207 39 0	30,08	83	3	Do.
♀——19.	4 14 36	23 31	43 21	112 42 9	3 45	203 45 42	30,04	80	6	Do.
	4 36 37	28 30⅔	38 19	112 34 34	3 45	203 45 8	30,04	80	6	Do.
	5 32 25	40 43¾	25 34	112 12 40	3 45	203 42 9	30,04	80	6	Do.
	5 49 12	44 30¼	21 42	112 6 1	3 45	203 47 18	30,04	80	6	Do.
♄——20.	5 8 41	34 51	43 18⅓	100 33 11	2 15	202 43 0	30,01	79	6	Do.
☉——21.	5 36 22	39 25	48 54	88 59 0	0 45	203 34 37	30,01	79	6	Do.
	5 53 25	43 1½	44 47	88 53 1	0 44	203 25 0	30,01	79	6	Do.
☽——22.	6 38 34	50 59	44 29½	77 26 15	0 31 N	203 4 30	30,05	77	6	Do. } At Turtle
♂——23.	6 0 31	42 16	63 25	66 33 50	1 54	202 13 15	30,06	77½	6	Do. } Island.
1778.	6 7 50	43 47	61 40	66 31 25	1 54½	202 27 46	30,06	77	6	Do.
☽ Jan. 5.	12 13 22	33 2⅔	63 57	73 25 17	5 8	202 16 16	29,90	77½	6	Do.
	12 27 27	30 4¾	67 5⅔	73 29 27	5 9	202 26 49	29,90	77½	6	Do.
♂—— 6.	12 43 24	25 47	61 30	86 29 8	6 6	202 48 43	29,93	79	6	Do.
♃—— 8.	11 28 45	39 37⅔	21 52 L	112 25 11	7 51	204 44 52	29,96	77	6	Do.
	11 38 3	27 38	24 4⅔	112 30 51	7 51	204 24 22	29,96	77	6	Do.
	11 57 30	33 36⅓	28 50⅔	112 41 40	7 51	204 0 6	29,96	77	6	Do.
☉——18.	5 21 24	20 57	32 42	109 30 46	21 40	201 2 55	30,12	77	6	Do.
	5 31 0	22 46	30 39½	109 28 29	21 40	201 5 55	30,12	77	6	Do.
	5 53 27	26 53	25 31	109 17 48	21 40	200 35 15	30,12	77	6	Do.
☽——19.	5 32 45	22 42	37 16⅙ U	98 14 0	21 56	201 15 7	30,20	76	6	Do.
	5 59 50	27 46	31 28	98 5 47	21 56	200 56 13	30,20	76	6	Do.
♂——20.	5 59 30	29 49⅔	37 43 L	87 3 30	21 56	200 44 15	30,10	76	6	Do.
	6 10 11	29 35⅓	35 34	87 0 20	21 56	200 46 28	30,10	76	6	Do.
☽ Feb. 2.	13 5 35	20 45⅓	66 20	55 40 11	21 56	199 18 51	30,11	76	6	Do.
	13 18 38	18 15	65 49¼	55 44 47	21 56	199 17 24	30,11	76	6	Do.
♂—— 3.	11 5 30	41 26	48 39 U	68 7 9	23 8	199 15 0	30,20	75	6	Do.
	11 16 4	39 56	50 48	68 10 57	23 8	199 7 0	30,20	75	6	Do.
☿—— 4.	12 59 31	21 2	64 2	81 57 27	24 47	199 10 15	30,31	73	6	Do.
	13 10 39	18 54	66 5	82 2 3	24 47	199 11 30	30,31	73	6	Do.
♃—— 5.	11 36 54	34 57	37 19	94 41 0	26 22	199 30 54	30,41	75	6	Do.
	11 46 32	33 22	39 27	94 44 50	26 22	199 30 54	30,41	75	6	Do.
☿——18.	4 44 9	15 9	24 48½	97 2 43	37 17	107 1 34	30,62	52	6	Do.
	6 3 37	28 0	12 37⅔	96 44 54	37 17	206 47 7½	30,62	52	5	Do.
♃——19.	4 47 2	16 29	25 51½	86 19 50	37 58	208 0 55	30,56	55½	6	Do.
	5 19 0	21 46	22 7	86 8 57	37 58	207 32 3	30,56	55½	6	Do.
♄——21.	4 6 46	12 12⅔	26 54⅓	64 34 3	40 4	211 56 15	30,31	52½	6	Do.
	4 16 34	13 47	26 38	64 32 1	40 4	212 14 30	30,31	52½	6	Do.
☿ March 4.	11 15 36	13 38	51 15	63 23 3	43 57	231 29 0	30,07	48	6	☽ à Pollux.
	15 16 5	74 20	29 43	62 2 15	43 53	232 9 15	30,07	48	4	☽ à Sun.
♄—— 7.	9 57 13	23 56	41 14	102 39 28	44 26	235 5 52	30,32	49½	6	Do.
	10 7 19	22 16	43 11⅔	102 43 0	44 26	235 21 45	30,32	49	6	Do.
☉—— 8.	9 28 59	28 26⅔	26 29	115 22 50	44 10	235 22 36	30,32	44½	6	Do.
	9 40 32	26 53	28 27½	115 28 47	44 10	235 12 15	30,32	44½	6	Do.
☽——16.	17 13 8	59 39½	15 10¼ L	65 20 17	43 20	233 15 27	30,31	44½	4	☽ à Regulus.

1778.	Time per Watch N° 2.	Altitude of the ☉'s L. L. or ✳.	Moon's Altitude.	Distance of the ☽'s Limb from the ☉'s, or ✳.	Latitude of the Ship.	Longitude of the Ship.	Barom.	Therm.	N° of Obs.	Objects.
	H. ′ ″	° ′	° ′	° ′ ″	° ′	° ′ ″	′	°		
♀ Mar. 20.	2 5 9	13 39⅓	17 15⅓ U	96 47 21	45 37 N	234 49 15 E	30,02	45	3	☽ à Sun.
♄ —— 21.	1 13 1	5 46⅙	18 58	86 1 58	47 1	235 26 25	30,00	41	6	Do.
	1 19 48	6 55	18 54½	86 0 20	47 1	235 20 7	30,00	41	3	Do.
	2 20 14	17 53	16 43	85 42 20	47 1	235 35 15	30,00	41	3	Do.
	2 28 27	18 12⅔	16 12⅔	85 40 0	47 1	234 49 30	30,00	41	4	Do.
	2 41 14	20 15	15 23	85 35 25	47 1	235 9 15	30,00	41	3	Do.
	2 45 26	20 50	15 4	85 34 30	47 7	235 25 16	30,00	41	3	Do.
☽ —— 23.	2 15 57	15 59	19 24	63 1 53	47 29	234 10 9	30,10	43½	6	Do.
	2 25 5	17 27½	19 32	62 59 43	47 29	234 33 0	30,10	43½	6	Do.
	3 27 45	26 59	19 2	62 38 32	47 29	234 12 54	30,10	43½	6	Do.
	3 37 8	28 21⅓	18 44	62 34 41	47 29	234 28 16	30,10	43½	6	Do.
♃ April 30.	13 1 53	12 0⅖	43 31 L	42 15 17	53 38	225 23 58	29,45	44	6	Do.
♀ May 1.	11 9 21	28 33	58 31⅓ U	55 16 13	55 6	224 44 45	29,75	44½	6	Do.
	11 19 44	27 7	58 24	55 21 0	55 6	224 31 15	29,75	44½	6	Do.
	11 35 56	24 52	57 56	55 27 33	55 6	224 35 30	29,75	44½	6	Do.
♄ —— 2.	10 23 22	34 28	51 54	68 24 41	57 17	223 46 25	30,10	44	6	Do.
	10 35 16	33 2	52 49	68 30 11	57 17	223 31 55	30,10	44	6	Do.
	10 57 53	30 14	54 15	68 39 40	57 17	223 30 45	30,10	44	6	Do.
	11 5 33	29 15	54 37	68 42 51	57 17	223 27 30	30,10	44	6	Do.
	16 44 19	38 38	30 48 L	33 23 0	57 17	223 44 15	30,10	43	6	☽ à Regulus.
	16 54 18	37 44	29 30⅓	33 17 51	57 17	223 51 30	30,10	43	6	Do.
☽ —— 4.	9 52 5	38 51	30 21 U	93 53 0	58 23	220 47 39	29,96	44½	4	☽ à Sun.
	10 7 8	37 13	32 8	93 59 25	58 23	220 53 31	29,96	44½	4	Do.
	10 22 24	35 37	33 57	94 6 0	58 23	221 5 39	29,96	44½	4	Do.
	12 15 48	21 36½	45 17	94 52 40	58 23	220 59 45	29,96	44½	6	Do.
	17 27 7	28 54	35 40 L	31 2 20	58 35	221 13 55	30,04	43	3	☽ à Pollux.
	17 39 27	21 21	34 16⅓	59 41 40	58 36	221 18 30	30,04	43	3	☽ à Spica Virg.
♂ —— 5.	12 16 39	21 43⅓	36 13 U	107 8 15	58 47	220 50 0	30,17	47	6	Do
	12 26 17	20 28	38 9	107 12 8	58 47	220 48 45	30,17	47	6	Do.
	17 36 30	21 4	36 35	46 40 55	58 47	221 20 45	30,17	47	3	Do.
	17 44 5	21 12	35 48½	46 37 12	58 47	221 6 45	30,17	47	4	Do.
	18 6 0	23 36	33 35	44 20 45	58 47	221 9 15	30,17	47	4	☽ à Pollux.
☿ —— 6.	10 43 43	33 40	17 3½	118 22 2	59 3	220 34 15	30,17	47	6	☽ à Sun.
	11 3 30	31 26⅙	19 26	118 30 49	59 3	221 9 39	30,07	47	6	Do.
	17 27 33	21 36	36 47¾	34 4 50	59 6	220 31 0	30,00	49	4	☽ à Spica Virg.
	17 38 27	21 14	36 5	20 54 7	59 6	220 38 7	30,00	49	4	☽ à Regulus.
☿ —— 20.	1 43 56	15 29	16 13	76 59 26	59 38	210 52 22	29,77	42	6	☽ à Sun.
	2 0 52	17 35	17 1	76 53 10	59 38	211 8 0	29,77	42	6	Do.
	2 19 1	19 49¾	17 37⅔	76 45 38	59 38	211 3 30	29,77	42	6	Do.
	3 0 37	25 2½	18 28⅓	76 29 47	59 38	211 32 0	29,77	42	6	Do.
	3 9 2	26 9	18 31	76 25 45	59 38	211 10 22½	29,77	42	6	Do.
♀ —— 22.	3 4 13	24 58	25 43 L	50 39 10	58 54	208 39 36	30,16	43	6	Do.
	3 14 31	26 12	26 19	50 35 26	58 54	208 35 25	30,16	43	6	Do.
♀ June 5.	13 16 53	25 56	15 42⅙ U	124 57 52	59 27	208 4 28	29,75	43½	6	Do.
♂ —— 16.	2 34 13	18 37	20 21⅓	106 9 38	55 34	202 11 30	30,07	42½	6	Do.
	2 50 35	20 52⅓	19 52	106 4 7	55 34	202 32 20	30,07	42½	6	Do.
	3 13 21	23 50	18 59½	105 54 35	55 34	202 25 43	30,07	42	4	Do.
	3 22 50	25 23	18 27	105 51 35	55 34	202 28 28	30,07	42	4	Do.
	3 35 19	27 6	17 46	105 45 40	55 34	201 59 21	30,07	42	4	Do.
☿ —— 17.	4 10 23	32 0	23 31	93 18 22	55 31	201 53 49	30,08	46	6	Do.
	4 24 57	34 6	22 42	93 14 5	55 31	202 11 42	30,08	46	6	Do.
	4 35 18	35 31	21 58	93 9 30	55 31	202 1 49	30,08	46	4	Do.

1778.	Time per Watch N° 2.	Altitude of the ☉'s L. L. or ✳.	Moon's Altitude.	Distance of the ☽'s Limb from the ☉'s or ✳.	Latitude of the Ship.	Longitude of the Ship.	Barom.	Therm.	N° of Obs.	Objects.
	H. ′ ″	° ′	° ′	° ′ ″	° ′	° ′ ″	″	°		
☿ June 17.	4 41 0	36 18	21 40 U	93 6 51	55 31 N	201 53 4 E	30,08	46	4	☽ à Sun.
	4 58 8	38 37	20 16	92 59 40	55 31	201 53 49	30,08	46	3	Do.
♀ ——19.	4 17 34	31 16⅓	38 17	67 33 58	54 55	198 1 52	29,80	46	6	Do.
	4 25 54	32 32	38 17	67 31 10	54 55	198 20 0	29,80	46	5	Do.
♄ ——20.	3 13 18	21 48	38 39	54 32 27	54 20	197 27 18	29,70	43½	6	Do.
	3 27 23	23 51	39 56	54 26 4	54 20	197 25 10½	29,70	43½	4	Do.
	3 33 46	24 45	40 25	54 23 12	54 20	197 23 18	29,70	43½	3	Do.
	3 40 3	25 39	40 54½	54 20 17	54 20	197 22 45	29,70	43½	3	Do.
	3 51 51	27 19½	41 39	54 16 32	54 20	197 45 33	29,70	43½	6	Do.
☿ July 15.	1 52 25	10 34½	26 55	110 47 5	58 29	198 16 28½	30,21	47	6	Do.
	2 3 55	12 14½	26 50⅔	110 41 5	58 29	198 19 43½	30,21	47	6	Do.
	2 24 14	14 33	26 15	110 34 13	58 29	198 21 36½	30,21	47	6	Do.
	2 31 45	15 39	25 58½	110 29 45	58 29	198 6 51	30,21	47	6	Do.
	3 33 47	23 43	22 42	110 4 30	58 29	198 0 51	30,21	47	6	Do.
	3 46 58	25 15	21 50	110 0 5	58 29	198 28 51	30,21	47	4	Do.
	4 10 19	28 14	20 3	109 50 0	58 29	198 29 51	30,21	47	3	Do.
♃ ——16.	2 36 2	15 41	32 18	97 51 10	58 47	197 1 0	30,30	51	6	Do.
	2 48 0	17 13½	32 7⅔	97 47 40	58 47	197 32 30	30,30	51½	6	Do.
	2 57 22	18 27	32 1	97 42 12	58 47	197 16 30	30,30	51½	6	Do.
	3 24 5	21 50½	31 7⅔	97 31 15	58 47	197 10 52	30,30	51½	6	Do.
	3 32 56	22 58⅓	30 43	97 29 3	58 47	197 22 15	30,30	51½	5	Do.
	3 50 21	25 11	29 54	97 22 22	58 47	197 38 45	30,30	51½	3	Do.
♀ ——17.	4 1 53	26 32	36 44	84 19 25	59 19	197 21 15	30,17	54½	6	Do.
	4 29 5	29 56	35 33	84 8 19	59 19	197 33 30	30,17	54	6	Do.
	4 15 56	28 18	36 14	84 12 53	59 19	197 14 15	30,17	54	4	Do.
	4 38 49	31 10	35 3	84 4 28	59 19	197 34 15	30,17	54	4	Do.
♄ ——18.	4 37 0	30 56	42 15	70 47 58	59 37½	197 32 45	29,87	57	6	Do.
	4 44 19	31 50	42 5	70 44 45	59 37½	197 30 15	29,87	57	6	Do.
	4 54 12	33 2	41 45	70 40 28	59 37½	197 40 30	29,87	57	6	Do.
	5 2 32	34 6	41 24	70 37 28	59 37½	197 46 15	29,87	57	6	Do.
☉ ——19.	3 23 48	24 9	46 3	57 36 1	59 37½	197 22 52	29,72	58	6	Do.
	3 52 30	25 12	46 23	57 31 30	59 37½	197 21 37	29,72	58	6	Do.
	4 3 37	26 38	46 53	57 27 8	59 37½	197 19 37	29,72	58	5	Do.
	4 16 41	28 15	47 19	57 23 18	59 37½	197 46 0	29,72	58	6	Do.
	4 24 25	29 14	47 27	57 17 48	59 37½	197 16 22	29,72	58	4	Do.
♂ ——28.	9 44 24	48 44	24 57⅕	52 31 8	59 55	190 17 0	29,76	48	6	Do.
	9 55 25	48 29	25 58	52 35 13	59 55	190 36 37	29,76	48	6	Do.
☿ Aug. 12.	4 28 28	21 3	12 57	125 51 39	66 31	191 38 35	30,10	41	6	Do.
	4 52 41	23 24	10 56	125 39 3	66 31	191 35 42	30,10	41	6	Do.
☉ ——16.	6 28 25	29 1	33 57½	72 45 35	70 24	197 13 1	30,05	36	4	Do.
	6 53 47	30 16	32 24	72 32 53	70 25	197 8 15	30,05	36	3	Do.
	7 5 17	30 48	31 34	72 26 43	70 25	196 55 15	30,05	36	3	Do.
	7 23 32	31 24	30 31⅓	72 18 28	70 25	197 22 15	30,05	36	3	Do.
	7 33 18	31 46	29 35	72 13 10	70 25	197 11 30	30,05	36	3	Do.
☽ ——17.	6 24 51	28 34⅔	39 31	59 18 13	70 29	197 37 45	29,94	34	6	Do.
	6 43 45	29 35½	38 36¾	59 9 19	70 29	197 52 0	29,94	34	4	Do.
	6 58 24	30 13	37 50	59 1 59	70 34	197 46 30	29,94	34	5	Do.
	7 10 30	30 36⅕	37 7	58 56 2	70 34	197 39 45	29,94	34	6	Do.
	7 21 59	31 5	36 28	58 50 10	70 34	197 42 15½	29,94	34	4	Do.
☽ Sept. 7.	22 28 15	29 13	16 17 L	73 15 37	64 20	196 25 34½	29,92	43	6	☽ à Aldebar.
	22 40 19	30 35	15 59	73 9 37	64 20	196 15 0½	29,92	43	6	Do.
	22 51 37	31 41½	15 34	73 4 5	64 20	196 9 34½	29,92	43	6	Do.

1778.	Time per Watch N° 2.	Altitude of the ☉'s L. L. or ✳.	Moon's Altitude.	Distance of the ☽'s Limb from the ☉'s, or ✳.	Latitude of the Ship.	Longitude of the Ship.	Barom.	Therm.	N° of Obs.	Objects.
	H. ′ ″	° ′	° ′	° ′ ″	° ′	° ′ ″	′	°		
☽ Sept. 7.	23 3 59	32 46⅚	15 9⅔ L	73 30 6	64 20 N	196 18 18 E	29,92	43	6	☽ à Aldebaran.
	23 15 30	33 47½	14 36	72 52 19	64 20	196 2 34	29,92	43	6	Do.
	23 27 55	34 45	13 58	73 18 42	64 20	195 56 34	29,92	43	6	Do.
	23 36 54	35 25	13 34	72 42 47	64 20	196 29 27	29,92	43	6	Do.
	23 42 23	35 54	13 17	72 39 35	64 20	196 21 4	29,92	43	6	Do.
♃ —— 10.	21 17 59	24 44	29 1⅔	32 9 36	64 20	198 14 9	30.00	39½	6	Do.
	21 31 34	26 15	30 0⅓	32 2 53	64 20	198 31 1½	30,00	39½	6	Do.
	21 40 50	27 6	30 3⅓	31 57 57	64 20	198 23 31½	30.00	39½	4	Do.
	21 47 36	27 50	30 56	31 54 48	64 20	198 33 1½	30,00	39½	3	Do.
	21 56 17	28 45	31 24	31 49 56	64 20	198 14 16½	30,00	39½	3	Do.
	4 26 9	16 2⅔	17 48⅔	129 34 40	64 19	197 47 54	30,04	44½	6	☽ à Sun.
♀ —— 11.	18 49 57	9 19	14 59	19 24 5	64 20	198 19 0	30,00	43	4	☽ à Aldebaran.
	18 55 29	9 55	15 33	19 20 13	64 20	198 27 16	30,00	43	3	Do.
	23 47 5	31 48	39 32 U	61 2 21	64 30	197 39 6	29,98	43	6	☽ à Pollux.
	0 0 35	33 15	39 52	60 54 37	64 30	197 38 43	29,98	43	6	Do.
	4 14 18	14 5	28 45	116 32 38	64 33	197 49 6	30,00	44	6	☽ à Sun.
	4 52 25	17 48	25 11⅓	116 15 25	64 33	197 45 6	30,00	44	6	Do.
	5 1 50	18 41	24 17	116 9 34	64 33	198 11 21	30,00	44	5	Do.
	5 7 35	19 9	23 46	116 7 46	64 33	197 41 51	30,00	44	3	Do.
♄ —— 12.	4 12 23	13 31	37 38	103 19 6	64 32⅓	197 40 30	29,97	46	6	Do.
	4 27 15	15 1	37 24½	103 13 17	64 32	198 1 15	29,97	46	6	Do.
	4 35 7	15 46	35 39	103 9 0	64 32	197 42 30	29,97	46	3	Do.
	4 39 53	16 15	34 56	103 6 43	64 32	197 44 19	29,97	46	3	Do.
	4 51 34	17 21⅔	34 0	102 1 7	64 32	197 35 45	29,97	46	6	Do.
☉ —— 13.	18 36 46	29 57	9 18 L	42 30 51	64 32	197 4 15	29,87	45	6	Do.
	18 48 20	30 9	10 24	42 37 48	64 32⅓	197 41 15	29,87	45	6	Do.
	4 34 18	15 23	43 3 U	89 51 57	64 32⅓	197 26 21	29,80	46	6	Do.
	4 50 25	15 53¾	41 54⅔	89 45 42	64 32⅓	197 55 58½	29,80	46	6	Do.
	5 2 45	18 6	41 6	89 40 33	64 32⅓	197 50 20	29,80	46	6	Do.
☽ —— 14.	19 2 55	33 15	8 27⅓ L	56 3 45	64 32⅓	197 43 25	29,84	44½	6	☽ à α Ariete.
	19 18 46	34 51	9 48	56 13 23	64 32½	197 44 0	29,84	44½	6	Do.
	6 19 31	24 6	40 48⅔ U	75 48 28	64 32½	198 7 45	29,80	46	6	☽ à Sun.
	6 29 50	24 46	39 54⅓	75 43 10	64 32	197 48 33	29,80	46	6	Do.
	6 35 54	25 6	39 21	75 39 30	64 32	197 50 55½	29,80	46	3	Do.
♂ —— 15.	22 46 32	48 4	25 15 Cr	71 53 13	64 21	197 45 15	29,79	37	6	☽ à α Ariete.
	22 56 35	48 4	26 16	71 57 33	64 21	198 11 30	29,79	37	6	Do.
	23 6 12	48 2	27 18	72 3 48	64 21	197 42 45	29,79	37	6	Do.
	5 0 15	18 40	48 22 L	63 10 13	64 22	197 54 30	29,78	37½	6	☽ à Sun.
	5 9 43	18 37⅓	48 6	63 5 28	64 22	198 6 0	29,78	37½	6	Do.
	5 16 13	19 5	47 51⅓	63 2 50	64 22	198 20 15	29,78	37½	3	Do.
	5 20 47	19 31	47 42	63 1 36	64 22	198 3 30	29,78	37½	3	Do.
☿ —— 16.	5 31 53	20 10	47 10½	49 47 5	64 22	197 52 0	29,77	38½	6	Do.
	5 45 8	21 4	47 1	49 41 50	64 22	198 6 45	29 77	38½	6	Do.
		Z.D. ☉ U.L	Z. D. ☽							
♄ Oct. 10.	5 34 0	71 50½	62 4 Cr	119 35 21	53 54	193 39 45	29,61	42	6	Do.
	5 47 33	63 39	70 24	119 27 5	53 54	193 24 30	29,61	42	6	Do.
	6 26 19	66 39	65 16	119 8 7	53 54	193 40 30	29,61	42	6	Do.
	6 34 39	65 57	70 23½	118 59 50	53 54	193 22 7	29,61	42	6	Do.
	6 50 20	64 43	72 32	118 51 11	53 54	193 25 22	29,61	42	6	Do.
☉ —— 11.	4 55 26	76 39	41 39	106 28 1	53 54	193 59 13	29,80	40	6	Do.
	5 16 32	74 8	38 48	106 22 26	53 54	193 51 5	29,80	40	6	Do.
	5 21 36	73 32	38 8	106 14 43	53 54	193 45 58	29,80	40	6	Do.

1778.	Time per Watch N° 2.	Altitude of the ☉'s L. L. or ✱.	Moon's Altitude.	Distance of the ☽'s Limb from the ☉'s, or ✱.	Latitude of the Ship.	Longitude of the Ship.	Barom.	Therm.	N° of Obs.	Objects.
	H. ′ ″	° ′ Z.D. ☉ U.L	° ′ Z. D. ☽'s	° ′ ″	° ′	° ′ ″	′	°		
☉ Oct. 11.	5 47 44	70 40	34 33 Cr	106 4 13	53 54 N	193 36 30 E	29,80	40	6	☽ à Sun.
	5 53 29	70 5	33 46	106 0 0	Do.	193 49 21	29,80	40	6	Do.
	6 11 26	68 19	31 19	105 50 57		193 40 3	29,80	40	6	Do.
	6 19 18	67 36	30 6	105 49 2		193 35 51	29,80	40	6	Do.
☽ —— 12.	4 31 55	79 54⅓	53 1	93 18 38		193 54 18	30,00	43	6	Do.
	4 38 41	79 3	52 17	93 15 6		193 46 15	30,00	43	6	Do.
	5 6 44	75 35	49 0	93 5 32		193 31 10	30,00	43	6	Do.
	5 13 31	74 46	48 9	93 1 14		193 44 55	30,00	43	6	Do.
	5 37 24	72 4	45 3	92 51 30		193 58 12	30,00	43	6	Do.
	5 44 25	71 20	44 7	92 47 55		193 41 18	30,00	43	6	Do.
	5 50 43	70 40	43 22	92 45 15		193 44 10	30,00	43	6	Do.
	5 53 52	70 19	42 59	92 43 13		193 28 48	30,00	43	6	Do.
♂ —— 13.	1 29 22	47 8	51 51	52 32 48		193 20 0	30,10	36	6	☽ à Aldebaran.
	1 55 33	46 23	52 25	52 40 29		192 48 0	30,10	36	6	Do.
	4 27 30	80 45⅔	57 6	80 14 18		193 41 45	31,00	42	6	Do.
	4 33 47	79 56	56 42	80 9 49		193 54 30	30,00	42	6	Do.
	4 59 11	76 46	54 48	80 0 27		193 59 42	30,00	42	6	Do.
	5 7 0	75 50	54 5	79 57 0		193 43 19	30,00	42	6	Do.

N. B. The last four days observations were made at Samgonooda Harbour at the island of Oonalaschka.

♂ Nov. 10.	5 43 46	26 32⅔	35 43 U	97 28 10	38 44	205 8 10	30,50	67½	6	☽ à Sun.
	5 52 0	27 25	34 9	97 24 28	38 44	205 10 55	30,50	67½	6	Do.
	6 2 51	28 28½	32 3	97 19 37	38 44	205 16 25	30,50	67½	6	Do.
☽ Dec. 28.	10 9 45	37 11	16 53	102 59 27	20 30	204 41 13½	30,10	73¼	6	Do.
	10 19 18	35 54	19 2	103 4 4	20 30	204 41 51	30,10	73½	6	Do.
	10 45 28	31 55	25 3	103 14 55	20 30	204 38 13	30,10	73½	6	Do.
	10 51 40	30 55	26 18	103 17 59	20 30	205 3 13	30,10	73½	6	Do.
	11 0 52	29 23	28 34	103 22 49	20 30	205 13 43	30,10	73½	6	Do.
1779.	11 10 35	27 41	30 43	103 25 24	20 30	205 19 28½	30,10	72½	6	Do.
♀ Jan. 1.	17 15 45	86 1	69 11 L	15 46 36	20 10	206 35 30	30,11	73	6	☽ à Aldebaran.
	17 31 47	88 20	72 43	15 53 6	20 10	207 5 15	30,11	73	6	Do.
♄ —— 2.	23 19 9	9 14	43 3	33 23 38	20 12	206 34 34	30,12	72½	6	Do.
☉ —— 3.	17 59 16	82 10	49 4	47 14 27	19 49	206 10 0	30,21	72½	6	Do.
♂ —— 5.	23 2 30	12 20	87 46⅓	79 19 36	19 4	204 27 15	30 31	72	6	Do.
	23 27 41	38 19	85 8 U	55 24 0	19 4	204 32 0	30,31	72	6	☽ à Spica.
	23 56 50	44 37	78 24	35 35 55	19 4	204 18 0	30,31	72	6	☽ à Pollux.
	0 50 33	32 16	77 15	50 15 27	18 56	203 50 45	30,15	75	6	Do.
♃ —— 7.	1 7 27	58 48	77 1 L	28 20 27	19 1	203 39 30	30,21	73	6	☽ à Regulus.
	1 25 27	54 26	75 20	18 27 53	19 1	202 51 45	30,21	73	6	Do.
	5 3 34	26 35⅓	28 47½ U	110 45 33	18 58	203 42 10	30,16	74	6	☽ à Sun.
	5 11 47	28 11	27 1	110 41 15	18 58	203 47 3	30,16	74	6	Do.
	5 19 10	29 9½	25 18½	110 37 50	18 58	203 48 30	30,16	74	6	Do.
	5 52 22	35 6	17 33	110 23 0	18 58	203 48 52	30,16	74	6	Do.
♄ —— 9.	0 58 23	58 59	59 26 L	54 31 18	18 42	204 7 37	29,99	74	6	Do.
	5 7 57	27 45	43 13 U	86 39 33	18 46	204 25 22	29,96	73½	6	☽ à Regulus.
	5 19 29	29 54	40 48	86 35 8	18 46	204 1 45	29,96	73½	6	☽ à Sun.
	5 34 39	32 28½	37 30	86 31 17	18 46	204 34 45	29,96	73½	6	Do.
	6 22 7	40 1	27 2	86 14 3	18 46	204 2 45	29,96	73½	6	Do.
☉ —— 10.	4 44 6	22 59	52 46	75 14 40	18 54	204 34 28½	29,91	70	6	Do.
	4 51 2	24 30	51 17	75 13 50	18 54	204 52 36	29,91	70	6	Do.

1779.	Time per Watch N° 2.	Altitude of the ☉'s L. L. or ✳.	Moon's Altitude.	Distance of the ☽'s Limb from the ☉'s, or ✳.	Latitude of the Ship.	Longitude of the Ship.	Barom.	Therm.	N° of Obs.	Objects.
	H. ′ ″	° ′	° ′	° ′ ″	° ′	° ′ ″	″	°		
☉ Jan. 10.	5 5 36	27 24	48 50 U	75 9 27	18 54 N	204 37 13 E	29,91	70	6	☽ à Sun.
	5 12 43	28 41	47 33⅔	75 7 52	18 54	204 48 28	29,91	70	6	Do.
	5 25 53	31 4	45 5	75 4 7	18 54	204 45 30	29,91	70	6	Do.
	5 32 30	32 8	43 54	75 2 23	18 54	204 53 15	29,91	70	6	Do.
	Note, The following were observed while among Sandwich Islands.									
☿ Feb. 10.	6 13 28	42 50	36 53	61 52 27	19 29	203 37 30	30,10	73	6	☽ à ☉. } Off Kerage-gooa Bay.
	6 23 51	44 36	35 21	61 50 35	19 29	204 5 15	30,10	73	6	Do. }
♂ —— 23.	11 13 10	39 19	57 8¾	79 17 41	19 50	203 36 32	30,15	77	6	☽ à Sun.
	11 30 1	35 56	61 2	79 24 49	19 50	203 17 40	30,15	77	6	Do.
☿ —— 24.	11 37 1	34 36	50 20⅓	92 28 14	20 42	202 59 42	30,17	75½	6	Do.
	11 46 17	32 40	52 35⅓	92 32 33	20 42	202 50 0	30,17	75½	6	Do.
♃ —— 25.	11 49 6	32 30	40 20	105 46 55	21 2	202 27 33	30,16	76	6	Do.
	12 33 47	22 39	50 10⅔	106 4 47	21 2	202 27 33	30,16	76	6	Do.
☽ March 1.	18 25 31	30 52	71 17 Cr	77 50 27	21 54	200 6 40	30,20	73¾	6	☽ à Aldeb. } At Atowi
	18 41 1	27 12⅓	74 39	77 53 40	21 54	200 41 0	30,20	73¾	6	Do.
	18 59 0	21 57	78 40	56 50 28	21 54	200 6 30	30,20	73¾	6	☽ à Spica.
	19 7 56	23 43	80 30	56 46 35	21 54	199 54 30	30,20	73¾	6	Do.
♂ —— 2.	18 26 48	73 18	58 34	48 17 58	21 54	199 53 45	30,14	74	6	☽ à Pollux
	18 35 13	71 36	59 26	48 21 20	21 54	200 9 0	30,14	74	6	Do.
	18 46 48	19 52	61 59	41 51 5	21 54	200 0 30	30,14	74	6	☽ à Spica.
	18 56 23	21 58	64 3	41 46 55	21 54	199 57 0	30,14	74	6	Do.
♃ —— 11.	5 35 28	38 11⅓	36 36 U	71 27 30	21 49	200 19 45	30,20	74	6	☽ à ☉. } At Neehow.
	5 57 54	43 1	33 50	71 21 29	21 49	200 16 15	30,20	74	6	Do.
	6 5 17	44 28	32 51	71 19 0	21 49	200 7 0	30,20	74	6	Do.
	6 12 22	45 50	31 58	71 18 3	21 49	200 10 18	30,10	74	6	Do.
♀ —— 12.	4 31 58	24 42	42 34 Cr	60 49 18	21 49	200 13 45	30,18	75	6	Do.
	4 39 36	26 24	42 39	60 46 57	21 49	200 0 0	30,18	75	6	Do.
♄ —— 13.	5 32 22	38 2	44 18	49 34 30	21 49	200 1 45	30,17	74	6	Do.
	5 39 58	39 40	44 14	49 31 57	21 49	199 43 30	30,17	74	6	Do.
☽ —— 22.	11 18 43	50 52	76 22 U	49 5 53	20 26	190 37 57	30,20	76	6	☽ à Sun.
	11 32 39	47 58⅓	79 38	49 10 25	20 26	190 52 34	30,20	76	6	Do.
	11 36 39	47 6	80 29	49 11 43	20 26	190 40 15	30,20	76	3	Do.
	11 43 41	45 37	81 52	49 14 [illegible]	20 26	190 35 30	30,20	76	3	Do.
♃ —— 25.	11 56 5	48 43⅓	42 6	88 54 30	19 52	184 3 52½	30,15	78½	6	Do.
	12 6 13	46 29	43 56	88 58 14	19 52	184 11 37	30,15	78½	5	Do.
	12 58 25	34 55	54 45	89 17 38	19 52	184 6 22	30,15	78½	5	Do.
	13 9 53	32 17	57 40	89 21 37	19 52	184 15 22	30,15	78½	5	Do.
♀ —— 26.	11 40 20	53 28	23 54	102 2 5	19 51	183 11 48	30,15	78½	6	Do.
	11 45 21	51 23	24 58	102 4 37	19 51	182 51 48	30,16	79	6	Do.
	11 53 44	50 35	26 47½	102 9 6	19 51	182 54 18	30,16	79	6	Do.
	11 59 12	49 24	27 57	102 12 13	19 51	182 37 33	30,16	79	6	Do.
♄ —— 27.	12 55 54	37 37	25 58	115 50 55	19 51	182 20 15	30,10	79	6	Do.
	13 0 8	36 27	26 53	115 52 57	19 51	181 52 30	30,10	79	6	Do.
	13 9 37	34 27	28 54	115 58 3	19 51	182 14 0	30,10	79	6	Do.
	13 13 46	33 31	29 48	116 0 0	19 51	182 5 15	30 10	79	6	Do.
♃ April 8.	5 29 21	15 44	31 13	91 5 43	31 58	167 28 3	30,46	64	6	Do.
	6 9 52	24 17	28 36	90 54 28	31 58	167 6 58	30,46	64	6	Do.
	6 20 9	26 28	27 44	90 52 13	31 58	167 18 25	30,46	64	6	Do.
	6 39 0	30 20½	25 57	90 46 45	31 58	167 17 16	30,46	64	6	Do.
	7 4 8	35 32	23 28	90 39 32	31 58	167 22 18	30,46	64	6	Do.

1780.	Time per Watch N° 2.	Altitude of the ☉'s L. L. or ✱.	Moon's Altitude.	Distance of the ☽'s Limb from the ☉'s, or ✱.	Latitude of the Ship.	Longitude of the Ship.	Barom.	Therm.	N° of Obs.	Objects.
	H. ′ ″	° ′	° ′	° ′ ″	° ′	° ′ ″	°	°		
♂ April 20.	15 13 10	24 2	59 26 U	46 37 28	49 57 N	161 2 6 E	29,84	32½	6	☽ à Sun.
	15 24 46	22 11	58 20	46 40 33	49 57	161 43 57	29,84	32½	6	Do.
	15 47 9	18 35	55 55	46 50 8	49 57	161 19 27	29,84	32½	6	Do.
☿ —— 21.	13 15 2	40 46	57 53	59 21 38	50 36	161 54 43	30,08	34½	6	Do.
	13 25 46	39 24	59 4	59 26 17	50 36	162 0 45	30,08	34½	6	Do.
	13 33 53	38 21	59 55	59 30 13	50 36	161 50 30	30,08	34½	6	Do.
	13 42 20	37 12	60 44	59 33 7	50 36	161 37 15	30,08	34½	6	Do.
	14 4 38	34 10½	62 32	59 42 37	50 36	161 37 36	30,08	34½	6	Do.
♃ June 17.	14 39 1	38 6	58 25	39 34 37	52 46	159 13 37	29,75	42	6	Do.
	14 46 44	36 57	57 55	39 38 55	52 46	159 2 30	29,75	42	1	Do.
☉ —— 20.	14 49 31	33 46½	40 57	80 15 33	55 17	163 25 30	29,97	42	6	Do.
	14 58 24	32 30	41 25	80 18 20	55 17	163 49 30	29,97	42	4	Do.
	15 11 39	30 38	42 2	80 24 52	55 17	163 15 45	29,97	42	4	Do.
	15 17 50	29 47	42 19	80 26 40	55 17	163 25 37	29,97	42	4	Do.
☽ —— 21.	13 8 27	46 38	21 35	92 14 34	56 0	164 2 45	30,07	52	6	Do.
	13 19 34	45 17	22 54½	92 19 28	56 0	164 7 0	30,07	52	6	Do.
	13 32 30	43 39	24 19	92 25 27	56 0	164 3 45	30,07	52	6	Do.
	13 39 46	42 39	25 6½	92 28 20	56 0	164 5 45	30,07	52	6	Do.
	13 44 37	42 5	25 38	92 30 30	56 0	164 5 30	30,07	52	6	Do.
	13 47 26	41 44	25 54½	92 31 43	56 0	164 15 45	30,07	52	6	Do.
♀ Aug. 6.	2 42 37	10 41	46 28 L	71 32 22	59 14	183 20 31	30,12	44½	6	Do.
	2 51 27	11 44	48 4	71 28 34	59 14	183 35 39	30,12	44½	6	Do.
	3 0 38	12 53	47 27	71 25 13	59 14	183 30 0	30,12	44½	6	Do.
	3 20 47	15 22	48 28	71 17 4	59 14	183 26 54	30,12	44½	6	Do.
	3 29 55	16 31	48 53	71 18 32	59 14	183 32 15	30,12	44½	6	Do.
	3 37 46	17 30	49 0	71 10 28	59 14	183 21 15	30,12	44½	6	Do.
	4 0 4	20 14	49 19	71 1 13	59 14	183 34 45	30,12	44½	6	Do.
♂ —— 17.	13 24 35	34 17	24 12½ U	69 20 55	53 44	167 52 45	30,05	53	6	Do.
	13 30 8	33 34	24 27	69 23 0	53 44	167 50 30	30,05	53	6	Do.
	13 36 5	32 47	24 40	69 24 55	53 44	168 4 45	30,05	53	6	Do.
	13 41 37	32 2	24 51	69 26 33	53 44	168 29 0	30,05	53	6	Do.
♀ Oct. 15.	12 6 49	19 12	15 55	65 31 48	46 14	155 43 6	30,10	44	6	Do.
	12 17 10	17 42	16 12	65 35 0	46 14	155 42 0	30,10	44	6	Do.
☉ —— 17.	12 54 10	13 23	13 1	87 48 37	45 3	153 35 21	30,14	45	6	Do.
	13 1 3	12 22	13 35	87 50 38	45 3	153 34 36	30,14	45	6	Do.
♀ —— 22.	19 39 53	30 40	42 17½ L	71 7 43	40 33	146 55 45	30,29	44	6	☽ à Aldebaran.
	19 53 4	33 15	42 4	71 3 48	40 33	147 15 0	30,29	44	6	Do.
☽ —— 25.	20 54 14	44 54	57 55	30 51 2	40 2	142 0 27	30,10	43	6	Do.
	21 1 58	45 18	58 36	31 20 10	40 2	142 44 45	30,10	43	6	Do.
	21 10 24	46 49	59 14	31 16 22	40 2	142 26 42	30,10	43	6	Do.
	21 18 47	48 20	59 42	30 40 12	40 2	142 1 15	30,10	43	6	Do.
♀ —— 29.	6 0 36	18 42	35 14 U	120 8 25	37 3	143 4 9	29,96	60	6	☽ à Sun.
	6 10 46	20 6½	33 35	120 4 0	37 3	143 2 0	29,96	60	6	Do.
	6 20 0	21 34	31 53	119 57 45	37 3	142 21 9	29,96	60	6	Do.
	6 27 1	22 39	30 31½	119 55 22	37 3	142 51 58	29,96	60	6	Do.
♄ —— 30.	6 16 5	21 23	44 5½	106 44 13	35 46	142 26 41	30,04	63	6	Do.
	6 31 30	23 45	41 3	106 38 0	35 46	141 46 45	30,04	63	6	Do.
	6 42 59	25 36	38 48	106 33 36	36 46	142 29 30	30,04	63	6	Do.
	6 52 38	27 2½	36 56	106 29 0	36 46	141 55 30	30,04	63	6	Do.
☉ —— 31.	0 37 23	66 22	49 55 L	56 25 45	35 20	141 15 45	30,30	62½	6	☽ à Aldebaran.
	0 42 23	65 50	50 54	56 28 20	35 20	141 9 0	30,30	62½	6	Do.
	6 54 47	64 3	53 28	56 33 35	35 20	141 9 45	30,30	62½	6	Do.

1779.	Time per Watch N° 2.	Altitude of the ☉'s L. L. or ✱.	Moon's Altitude.	Distance of the ☽'s Limb from the ☉'s or ✱.	Latitude of the Ship.	Longitude of the Ship.	Barom.	Therm.	N° of Obs.	Objects.
	H. ′ ″	° ′	° ′	° ′ ″	° ′	° ′ ″	′	°		
☉ Oct. 31.	1 7 43	62 0	55 51 L	56 38 43	35 20 N	141 15 30 E	30,30	62½	6	☽ à Aldebaran.
	1 20 10	33 51	58 19	24 22 15	35 20	141 22 45	30,30	62½	3	☽ à Regulus.
	1 29 3	35 40	60 3½	24 20 5	35 20	141 53 15	30,30	62½	3	Do.
	7 18 16	30 17	43 1 U	93 1 10	35 20	142 12 0	30,21	62½	3	☽ à Sun.
	7 23 34	30 58	42 3	92 57 50	35 20	141 46 15	30,21	62½	3	Do.
	7 30 51	31 51	40 36	92 54 55	35 20	141 55 0	30,21	62½	3	Do.
	7 36 9	32 31	39 33	92 52 7	35 20	141 44 15	30,21	62½	3	Do.
♄ Nov. 13.	13 1 31	22 23	37 1 L	56 42 30	25 33	142 42 45	29,81	71	6	Do.
	13 15 54	19 41	37 28	56 45 5	25 33	143 3 45	29,81	71	6	Do.
☉ —— 14.	12 10 9	32 55	30 1 U	67 28 40	24 27	142 5 54	30,06	73½	6	Do.
	12 16 56	31 49	30 53	67 30 27	24 27	142 10 30	30,06	73½	6	Do.
	12 28 21	29 54	32 18	67 33 18	24 27	142 15 9	30,06	73½	6	Do.
	12 35 1	28 44	33 8	67 35 28	24 27	142 1 30	30,06	73½	6	Do.
☽ —— 15.	13 0 39	24 27	31 43	78 7 30	24 51	141 13 34	30,14	79	6	Do.
	13 9 28	22 53	32 51	78 39 53	24 51	141 26 25	30,14	79	6	Do.
	13 55 59	13 57	38 17	78 51 28	24 51	140 56 28	30,14	79	6	Do.
♂ —— 16.	12 40 36	29 14	21 47	89 26 47	25 3	138 27 22	30,15	79	6	Do.
	12 46 58	28 10	22 58	89 29 10	25 3	138 38 52	30,15	79	6	Do.
	12 55 46	26 39	24 33	89 32 42	25 3	138 10 15	30,15	79	6	Do.
	13 2 55	25 28	25 43	89 34 22	25 3	138 33 52	30,15	79	6	Do.
♄ —— 20.	20 17 21	50 30	69 26 L	50 15 13	21 34	129 29 10	30,24	77	6	☽ à Aldebaran.
	20 25 35	52 25	68 36	50 12 58	21 34	129 35 10	30,24	77	6	Do.
	20 36 38	54 58	67 20	50 9 0	21 34	129 35 10	30,24	77	6	Do.
1780.	20 44 37	56 51	66 21	50 6 25	21 34	129 33 51	30,24	77	6	Do.
♀ Jan. 14.	15 19 23	22 42	57 54	83 23 8	20 16	113 48 0	30,25	63	6	☽ à Sun.
	15 31 1	20 26	50 18 U	83 26 0	20 16	114 0 0	30,25	63	6	Do.
♄ —— 15.	14 53 28	28 37½	45 28	94 58 25	18 38	113 40 45	30,22	69	6	Do.
	15 0 46	27 16	47 9	95 1 0	18 38	113 38 57	30,22	69	6	Do.
	15 10 21	24 26	49 22	95 3 23	18 38	113 34 15	30,22	69	6	Do.
	15 15 42	14 27	50 39	95 4 45	18 38	114 16 15	30,22	69	6	Do.
☉ —— 30.	8 58 41	34 51	60 43	59 8 0	3 37 S	104 8 16	30,10	76	6	Do.
	9 3 34	35 59	60 12	59 7 17	3 37	104 20 24	30,10	76	6	Do.
	9 12 9	37 53	59 15	59 4 37	3 37	104 0 24	30,10	76	6	Do.
	9 18 27	39 22	58 29	59 3 5	3 37	104 10 9	30,10	76	6	Do.
♀ Feb. 18.	22 8 0	33 4	56 41	60 54 30	6 49	105 17 22	29,90	79½	6	☽ à Aldebaran.
	22 20 22	30 16	57 46	60 59 0	6 49	105 17 52	29,90	79½	6	Do.
☉ —— 20.	22 29 30	50 33	47 31 L	48 6 35	9 15	104 31 57	29,95	81	6	☽ à Spica Virg.
	22 42 29	49 25	40 12	48 11 55	9 15	104 41 27	29,95	81	6	Do.
	23 2 50	26 51	54 15	42 32 32	9 15	104 39 12	29,95	81	6	☽ à Pollux.
	23 12 52	29 26	56 9	42 28 25	9 15	104 34 19	29,95	81	6	Do.
♄ —— 26.	7 44 23	17 16	69 3 U	99 28 53	13 48	99 45 0	30,00	80	6	☽ à Sun.
	7 54 20	19 19	66 59	90 27 22	13 48	99 58 0	30,00	80	6	Do.
☽ —— 28.	8 36 29	25 7	79 6½	67 18 13	15 46	95 4 24	30,05	78	6	Do.
	8 44 33	27 1	78 29	67 16 32	15 46	95 8 24	30,05	78	6	Do.
	8 54 59	29 32	77 21	67 14 2	15 46	95 1 24	30,05	78	6	Do.
	9 2 7	31 18	76 28	67 12 3	15 46	94 48 13	30,05	78	6	Do.
♄ Mar. 11.	15 9 1	70 19	31 15	57 36 47	20 52	71 19 25	30,17	79	6	Do.
	15 24 37	68 21	33 56	57 41 43	20 52	71 5 25	30,17	79	6	Do.
	15 35 56	66 38	35 54	57 46 35	20 52	71 7 55	30,17	79	6	Do.
	17 2 41	49 35	47 38	58 13 38	20 52	71 22 10	30,17	79	6	Do.
	17 14 27	46 48	48 15	58 16 45	20 52	71 25 25	30,17	79	6	Do.
☉ —— 12.	16 53 30	53 7	35 15	70 18 17	21 6	68 56 36	30,17	79	6	Do.

1780.	Time per Watch N° 2.	Altitude of the ☉'s L. L. or ✱.	Moon's Altitude.	Distance of ☽'s Limb from the ☉'s or ✱.	Latitude of the Ship.	Longitude of the Ship.	Barom.	Therm.	N° of Obs.	Objects.
	H. ′ ″	° ′	° ′	° ′ ″	° ′	° ′ ″	′	°		
☉ Mar. 12.	17 0 30	51 37	36 16 U	70 20 49	21 6 S	68 40 21 E	30,17	79	6	☽ à Sun.
	17 8 7	50 0	37 18	70 23 2	21 6	68 49 36	30,17	79	6	Do.
☽ —— 13.	17 15 34	49 54	26 12	82 48 50	21 31	66 48 45	30,24	79	6	Do.
	17 22 3	48 18	27 24	82 52 5	21 31	66 20 0	30,24	79	6	Do.
	17 34 30	45 54	29 6	82 56 0	21 31	66 43 30	30,24	79	6	Do.
♂ —— 14.	22 18 19	36 3	38 56 L	27 5 30	22 25	63 16 30	30,22	77	6	☽ à Aldebaran.
	22 27 25	34 33	38 27	27 8 27	22 25	63 13 0	30,22	77	6	Do.
	22 40 26	37 52	37 30	54 28 32	22 25	62 58 30	30,21	77	6	☽ à Regulus.
	22 54 55	40 26	36 17	54 23 38	22 25	63 8 22	30,21	77	6	Do.
☿ —— 15.	19 21 21	24 44	22 16 U	109 23 37	22 45	62 39 30	30,21	77	6	☽ à Sun.
	19 34 17	21 47	24 17	109 29 2	22 45	62 4 45	30,21	77	6	Do.
	22 32 48	35 29	39 50 L	40 25 27	22 54	62 48 30	30,21	77	6	☽ à Regulus.
	22 43 16	37 24	39 49	40 20 42	22 54	62 25 30	30,21	77	6	Do.
	22 52 52	30 27	39 40	41 10 10	22 54	62 33 22	30,21	77½	6	☽ à Aldebaran.
	23 1 27	28 40	39 39	41 12 40	22 54	62 37 27	30,21	77½	6	Do.
♃ —— 23.	2 31 51	48 3	27 31 U	26 49 2	29 4	43 23 25	30,32	76	6	☽ à Spica.
♄ —— 25.	11 52 43	14 27	55 41	108 14 45	30 20	39 18 24	30,20	74	6	☽ à Sun.
	12 0 7	15 33	54 9	108 11 40	30 20	39 4 0	30,19	74	4	Do.
☉ —— 26.	13 32 38	33 29	47 50	96 4 53	30 56	37 7 49	30,08	75	6	Do.
	13 39 1	34 39	46 27	96 3 28	30 56	37 31 45	30,08	75	6	Do.
	13 49 4	36 33	44 17	96 0 5	30 56	37 44 57	30,08	75	6	Do.
	13 54 40	37 35	43 13	95 58 20	30 56	37 34 31	30,08	75	6	Do.
♂ —— 28.	14 21 6	39 15	61 27	73 22 23	31 31	34 0 22	30,20	72½	6	Do.
	14 25 4	39 59	60 39	73 20 25	31 31	33 48 22	30,20	72½	6	Do.
	14 34 2	41 23	58 45	73 19 8	31 31	34 20 7	30,20	72½	6	Do.
	14 40 10	42 22	57 29	73 17 18	31 31	33 50 5	30,20	72½	6	Do.
☉ April 9.	20 33 19	31 39	28 35	54 30 17	35 3	19 32 4	30,05	67	6	Do.
	21 13 1	25 5	29 41	54 40 50	35 3	19 38 30	30,05	67	6	Do.
	21 24 18	23 5	29 44	54 46 13	35 3	19 40 0	30,05	67	6	Do.
	21 30 29	21 55	29 43	54 48 27	35 3	19 23 0	30,05	67	6	Do.
♄ May 13.	21 35 21	15 51	14 33	116 49 25	32 27	15 46 0	30,30	64	6	Do.
	21 44 7	14 19	16 15	117 0 20	32 27	15 42 15	30,30	64	6	Do.
♃ —— 18.	2 45 13	63 45	30 46½ L	43 3 0	25 50	2 5 9	30,24	63	6	☽ à Spica.
	2 54 42	65 27	32 49	43 6 18	25 50	2 12 39	30,24	63	6	Do.
☾ —— 21.	5 58 1	69 39	32 32	37 20 7	22 54	4 20 6 W	30,22	69	6	☽ à Antares.
	6 11 40	72 48	35 26	37 25 33	22 54	3 56 30	30,22	69	6	Do.
☿ —— 24.	15 8 18	14 22	62 46 U	100 19 45	18 25	8 43 31	30,22	72	6	☽ à Sun.
	15 14 52	15 43	61 13	100 17 58	18 25	9 16 46	30,22	72	6	Do.
	15 21 59	17 12	59 34	100 16 33	18 25	8 53 45	30,22	72	6	Do.
	15 29 16	18 40	57 47	100 16 58	18 25	8 45 16	30,22	72	6	Do.
♃ —— 25.	17 16 27	38 13	43 41	88 40 20	17 0	10 55 40	30,20	71	6	Do.
	17 23 22	39 18	42 3	88 37 42	17 0	10 52 40	30,20	71	6	Do.
	17 29 0	40 15	40 43	88 36 32	17 0	10 24 15	30,20	71	6	Do.
♄ —— 27.	18 29 39	48 38	45 16	66 0 53	15 5	13 13 15	30,17	71	6	Do.
	18 37 36	49 30	43 25	65 58 33	15 5	13 4 37	30,17	71	6	Do.
	18 46 53	50 23	41 14	65 56 3	15 5	13 9 37	30,17	71	6	Do.
	18 51 25	50 49	40 6	65 53 22	15 5	13 32 7	30,17	71	6	Do.
☿ June 7.	21 0 7	59 26⅔	26 17	61 22 20	6 17	22 46 9	30,20	81	6	Do.
	21 6 17	59 1	27 47	61 24 50	6 17	22 46 16	30,20	81	6	Do.
	21 13 56	58 23	29 12	61 28 30	6 17	22 54 54	30,20	81	6	Do.
	21 20 42	57 50	30 40	61 31 8	6 17	22 50 45	30,20	81	6	Do.
♃ —— 8.	0 10 18	30 9	57 3½	76 4 17	4 32	24 22 30	30,12	81	6	Do.

1780.	Time per Watch N° 2.	Altitude of the ☉'s L. L. or ✱.	Moon's Altitude.	Distance of ☽'s Limb from the ☉'s, or ✱.	Latitude of the Ship.	Longitude of the Ship.	Barom.	Therm.	N° of Obs.	Objects.
	H. ′ ″	° ′	° ′	° ′ ″	° ′	° ′ ″	″	°		
♃ June 8.	0 16 23	28 48	58 15 U	76 6 24	4 32 S	24 30 25 W	30,12	81	6	☽ à Sun.
	0 25 3	26 56	59 59	76 9 38	4 32	24 38 37	30,12	81	6	Do.
	0 33 42	25 3	61 35	76 12 30	4 32	24 41 52	30,12	81	6	Do.
♀ —— 9.	0 18 59	30 1	50 5	89 33 27	2 56	25 26 31	30,16	80	6	Do.
	0 24 19	28 53	51 21	89 35 30	2 56	25 38 46	30,16	80	6	Do.
	0 31 44	27 17	53 4	89 38 35	2 56	25 52 24	30,16	80	6	Do.
	0 37 7	26 7	54 8	89 40 27	2 56	25 54 31	30,16	80	6	Do.
♄ —— 10.	4 30 21	30 11	79 13	62 11 46	0 31	25 49 19	30,14	78	6	☽ à Antares.
	4 40 5	40 9	76 42	62 9 7	0 31	25 26 3	30,14	78	6	Do.
♀ —— 16.	6 53 50	46 25	47 24 L	66 6 45	5 54 N	25 49 33	30,14	79	6	☽ à Spica.
	7 3 7	44 10	48 45	66 42 5	5 54	26 38 33	30,14	79	6	Do.
	7 13 58	41 40	50 14	66 11 50	5 54	26 23 40	30,14	79	6	Do.
	7 23 58	39 11	51 30	66 47 30	5 54	26 15 3	32,14	79	6	Do.
	N. B. The Moon being very near the full, the distance of the Star from her near limb, and farthest limb, was observed alternately.									
♂ —— 21.	15 53 56	18 24	41 48 U	118 53 50	9 16	27 38 0	30,20	80½	6	☽ à Sun.
	16 3 5	20 29	39 51	118 51 45	9 16	26 54 15	30,20	80½	6	Do.
♃ —— 22.	15 43 38	15 58	55 43	107 58 33	9 36	28 28 49	30,16	79	6	Do.
	15 52 6	17 52	54 3	107 56 23	9 36	28 33 15	30,16	79	6	Do.
♀ —— 23.	17 41 40	41 21	51 47	96 21 50	10 28	29 26 15	30,10	79	6	Do.
	17 49 19	43 5	40 1	96 19 23	10 28	29 29 30	30,10	79	6	Do.
	17 55 38	44 37	38 33	96 17 50	10 28	29 20 40	30,10	79	6	Do.
☉ —— 25.	16 36 2	25 35	79 27	74 4 0	12 43	30 48 45	30,12	79½	6	Do.
	16 45 39	27 46	77 36	74 1 14	12 43	30 59 15	30,12	79½	6	Do.
☽ —— 26.	17 43 5	40 7	78 38	62 1 43	13 53	32 4 0	30,14	79	6	Do.
	17 46 58	41 0	77 24	62 0 0	13 53	32 34 45	30,14	79	6	Do.
♃ July 6.	0 42 41	49 22	66 17	60 21 17	27 1	40 27 21	30,30	78	6	Do.
	0 49 44	47 57	67 23	60 23 34	27 1	40 9 36	30,30	78	6	Do.
♀ —— 7.	23 9 13	70 18	34 11	73 18 32	28 8	41 1 49	30,24	79	6	Do.
	23 16 23	68 45	35 42	73 21 38	28 8	41 10 57	30,24	79	6	Do.
☉ —— 9.	0 56 0	47 13	27 51	100 9 10	29 36	41 15 7	30,24	82	6	Do.
	1 1 58	45 56	29 57	100 11 42	29 36	41 8 7	30,24	82	6	Do.
	1 9 0	44 27	30 8	100 16 8	29 36	41 55 37	30,24	82	6	Do.
	1 13 58	43 22	31 0	100 17 38	29 36	41 27 37	30,24	82	6	Do.
	5 59 23	33 31	44 9	36 42 5	29 46	41 40 15	30,26	79	6	☽ à Antares.
	6 4 31	33 44	43 33	36 39 50	29 46	42 5 52	30,26	79	6	Do.
	6 12 48	34 8	42 35	36 37 59	29 46	41 47 0	30,26	79	6	Do.
	6 17 42	34 11	41 55	36 36 10	29 46	41 41 15	30,26	79	6	Do.
☉ —— 16.	8 3 52	23 0	20 50	54 32 40	36 5	40 36 10	30,42	77	6	Do.
	8 24 25	21 4	22 54	54 40 47	36 5	41 11 10	30,42	77	6	Do.
♀ —— 21.	15 54 17	16 32	40 2	115 24 27	38 10	36 32 3	30,34	77	6	☽ à Sun.
	16 0 26	17 34	39 9	115 22 30	38 10	36 32 1	30,34	77	6	Do.
	16 9 2	19 23	37 59	115 19 28	38 10	36 53 25	30,34	77	6	Do.
	16 15 13	20 35	37 4	115 17 23	38 10	36 59 25	30,34	77	6	Do.
♄ —— 22.	16 13 12	19 52	47 30	104 12 16	38 30	36 54 22	30,30	76	6	Do.
	16 20 22	31 16	46 33	104 10 32	38 30	36 42 15	30,30	76	6	Do.
☉ —— 23.	17 58 13	40 32	41 46	92 19 7	38 41	36 46 52	30,31	76	6	Do.
	18 5 38	41 57	40 30	92 17 18	38 41	36 32 37	30,30	77	6	Do.
♂ —— 25.	16 30 42	24 6	70 30⅓	69 9 9	38 56	35 23 30	30,10	77	6	Do.
	16 39 50	25 46	70 19	69 6 7	38 56	35 28 0	30,10	77	6	Do.

1780.	Time per Watch N° 2.	Altitude of the ☉'s L. L. or ✱.	Moon's Altitude.	Distance of the ☽'s Limb from the ☉'s, or ✱.	Latitude of the Ship.	Longitude of the Ship.	Barom.	Therm.	N° of Obs.	Objects.
	H. ′ ″	° ′	° ′	° ′ ″	° ′	° ′ ″	″	°		
♃ Aug. 3.	0 12 57	36 44	49 8	42 50 51	44 55 N	22 29 22 W	30,38	75	6	☽ à Sun.
	0 18 58	35 31	48 45	42 53 22	44 55	22 29 7	30,38	75	6	Do.
	0 26 37	34 12	48 13	42 56 22	44 55	22 24 49	30,38	75	6	Do.
	0 33 59	32 54	47 34	43 0 17	44 55	22 23 7	30,38	75	6	Do.
♀ —— 4.	22 59 47	47 33	41 33	56 7 22	45 20	21 25 28	30,27	73	6	Do.
	23 5 55	46 36	41 54	56 9 46	45 20	21 30 30	30,27	73	6	Do.
	23 12 56	45 30	42 16	56 11 55	45 20	21 2 45	30,27	73	6	Do.
	23 18 40	44 34	42 31	56 14 15	45 20	21 14 30	30,27	73	6	Do.
	4 43 36	17 8	13 6	55 16 30	45 24	21 45 15	30,24	72	6	☽ à Antares.
	4 49 7	16 55	12 12	55 14 43	45 24	21 11 30	30,24	72	6	Do.
☉ —— 6.	0 47 11	27 8	28 30	83 7 5	46 47	19 0 0	30,22	72	6	☽ à Sun.
	0 52 47	26 11	28 44	83 9 40	46 47	19 41 31	30,22	72	6	Do.
☽ —— 14.	9 46 14	47 41	13 22	73 23 54	54 20	15 46 15	29,95	60	6	☽ à α Arietis.
	9 52 37	48 23	13 4	73 50 40	54 20	15 49 55	29,95	60	6	Do.
	10 3 33	49 22	12 25	73 46 17	54 20	15 41 25	29,95	60	6	Do.
	10 10 8	50 20	11 59	73 14 19	54 20	15 32 55	29,95	60	6	Do.

N. B. The Moon was full nearly at the time of these observations. The distance of the Star was observed from her nearest and farthest limbs alternately.

☉ —— 20.	13 45 17	13 49	37 12	112 11 2	58 44	4 49 27	29,75	61½	6	☽ à Sun.
	13 52 6	14 39	36 36	112 9 28	58 44	4 45 0	19,75	61½	6	Do.
	14 17 40	18 0	34 13	112 1 0	58 44	4 28 19	29,75	61½	6	Do.
	14 24 5	18 50	33 35	111 58 15	58 44	4 47 27	29,75	61½	6	Do.

The following were observed at Strumness, at the Orkneys.

		Z.D. ☉'s U.L.	Z. D. ☽'s							
♀ —— 25.	17 29 53	51 34	37 11⅔ U	49 1 33	58 56 N	3 26 49	30,24	63	6	☽ à Sun.
	17 35 42	51 14	37 42	48 57 53	58 56	3 40 49	30,24	63	6	Do.
	17 40 10	50 56	38 6	48 55 43	58 56	3 46 0	30,24	63	6	Do.
	17 46 33	50 34	38 40	48 53 42	58 56	3 25 49	30,24	63	6	Do.
	18 4 36	49 47	40 42	48 45 33	58 56	3 21 0	30,24	63	6	Do.
	18 11 35	49 31	41 6	48 42 0	58 56	3 25 30	30,24	63	6	Do.
	18 15 0	49 22	41 26	48 41 27	58 56	3 34 45	30,24	63	6	Do.
	18 19 17	49 14	41 54	48 38 37	58 56	3 27 30	30,24	63	6	Do.
♄ —— 26.	20 16 19	50 17	54 58	47 43 35	58 56	3 32 0	30,25	63	6	Do.
	20 22 45	50 37	55 46	47 40 35	58 56	3 30 0	30,25	64	6	Do.
	20 30 43	51 4	56 47	47 36 16	58 56	3 36 18	30,25	64	6	Do.
	20 37 1	51 24	57 35	47 33 15	58 56	3 29 0	30,25	64	6	Do.

*** The Zenith distances were observed with an Astronomical Quadrant of one foot radius made by Bird.

AZIMUTHS OF THE SUN's CENTER,

TAKEN WITH

AN AZIMUTH COMPASS OF KNIGHT's CONSTRUCTION,

TOGETHER WITH

THE ALTITUDES OF THE SUN's LOWER LIMB,

TAKEN AT THE SAME TIME WITH A HADLEY's SEXTANT,

FOR DETERMINING

THE VARIATION OF THE MAGNETIC NEEDLE.

BY WILLIAM BAYLY,

On Board His MAJESTY's SLOOP DISCOVERY,

DURING HER LATE VOYAGE ON DISCOVERIES,

IN THE YEARS 1776, 77, 78, 79, and 80.

1776.	Observed Alt. of the ☉'s L. L.	Magnetic Azimuth of the ☉'s Center.	Variation.	Latitude in.	Longitude in.	N° of Observations.	Remarks.
	° ′	° ′	° ′	° ′	° ′		
♂ Aug. 6.	14 4	S 59 3 W	21 45 W	43 56 N	10 10 W	4	The ship very steady.
	14 50	S 78 12 E	26 14	43 17	10 21	6	
♃ —— 8.	8 23	S 53 24 W	22 56	40 45	11 26	4	
☉ —— 11.	8 45	N 56 10 W	21 42	35 51	14 0	6	
♂ —— 13.	14 53	61 50	20 38	33 19	16 2	6	
☽ —— 19.	13 30	66 4	16 52	27 43	21 0	6	
	13 47	S 79 45 E	17 11	26 26	21 2	6	
☉ —— 25.	6 15	N 69 24 W	11 40	17 48	24 6	5	
♃ —— 29.	12 42	73 58⅓	9 26	12 8	23 50	6	
☉ Sept. 8.	10 43	72 5	13 21	4 17	13 50	4	
☽ —— 16.	10 56	74 24	13 19	0 22	14 20	5	
♄ —— 21.	11 4⅔	79 56½	9 58	3 57 S	18 28	6	
☽ —— 23.	11 0	81 25	7 43	7 5	20 23	6	
☿ —— 25.	10 44⅔	S 84 31 E	6 5	11 4	22 50	5	
♀ —— 27.	7 14	N 85 14 E	5 6	13 34	23 54	6	
☉ —— 29.	13 33	85 21 W	3 25	17 20	25 0	5	
	8 12	S 86 0 E	3 34	18 33	25 2	5	
☽ —— 30.	14 38	88 12	3 30	20 0	25 20	6	
♂ Oct. 1.	17 14⅔	N 84 23 W	3 1	20 17	25 17	4	
♀ —— 4.	14 13	87 0	2 16	22 17	24 25	5	
☉ —— 6.	12 38	86 18	2 54	24 58	24 8	4	
☿ —— 9.	19 43	84 7½	2 30	28 58	21 7	6	
	21 51	S 91 22 E	3 2	29 5	21 0	4	
♀ —— 11.	11 16	90 31⅔	3 6	28 40	20 1	5	
☉ —— 13.	12 24⅔	81 45	4 45	30 26	16 10	6	
☿ —— 16.	13 39	N 86 7½ W	6 20	31 47	10 50	5	
	8 56½	S 78 22 E	6 2	31 42	10 14	5	
♂ —— 22.	9 10	N 83 42½ E	13 56	33 46	2 30 E	6	
♃ —— 24.	5 36	N 85 42 W	15 8	33 55	3 54	5	
☽ —— 28.	15 9	78 54	17 16	33 57	11 18	4	
♃ Nov. 7.	13 19	79 55	21 15	34 13	16 50	2	
♃ Dec. 5.	6 3	90 56	23 14	39 10	23 29	6	
♂ —— 10.	16 32½	79 38¾	26 35	44 23	32 22	4	
♄ —— 14.	15 41½	78 11	29 11	48 0	41 44	5	
♂ —— 24.	27 10	66 31	31 51	48 37	68 52	4	
☉ —— 27.	20 6⅛	S 47 1½ E	30 28½	48 41	68 53	6	In Christmas harbour, at the Island of Desolation.
	21 44	48 31	30 43	48 41	68 53	6	
1777.	47 56	82 24	29 32	48 41	68 53	6	
☿ Jan. 1.	31 57	62 0	28 52	48 20	80 0	4	
♄ —— 4.	13 17	N 81 6 W	28 2	48 30	84 20	5	
♀ —— 10.	12 54½	87 21	20 59	48 17	106 19	6	
☽ —— 13.	8 57	S 50 53 E	17 21	47 25	113 5	4	
♀ —— 17.	16 18	S 83 28 W	6 32	44 14	128 39	5	
♄ —— 18.	19 2	83 56	4 8 E	44 12	131 55	4	
☽ —— 20.	14 36	S 76 10 E	2 0	43 28	140 42	5	
	25 27	88 25	2 9	43 29	140 50	5	

1777.	Observed Alt. of the ☉'s L. L.	Magnetic Azimuth's of the ☉'s Center.	Variation.	Latitude in.	Longitude in.	N° of Observations.	Remarks.
	° ′	° ′	° ′	° ′	° ′		
♂ Jan. 21.	11 48	S 72 8 W	1 50 E	43 25 S	142 24 E	6	
☿ —— 22.	13 30⅘	71 32⅘	4 20	43 30	144 0	5	The ship very steady.
♀ —— 24.	16 46	73 36	5 56	43 41	147 25		
☿ —— 29.	By a mean of 9 Azimuths the variation is 7° 29′.					9	In Adventure Bay at Vandieman's Land.
♂ Feb. 4.	22 43	N 78 23½ E	12 6	43 35	161 42 E	5	
☽ —— 10.	10 59⅘	S 67 24 W	13 22	40 32	171 45	6	
☿ March 5.	6 8¼	77 21	10 9	39 45	171 20 W	5	Fine weather.
	16 48¼	N 73 40 E	9 42	39 19	171 15	5	
♄ —— 8.	9 56	S 81 20 W	10 46	39 25	167 45	6	
☉ —— 9.	13 14	N 75 15 E	8 55	39 23	165 12	5	
♂ —— 11.	16 45 1/6	S 88 9 W	10 15	39 30	161 26	6	
♄ —— 15.	7 41	82 41	10 7	33 52	161 29	5	
♃ —— 20.	13 28¼	87 27	10 9	28 46	159 15	6	
♀ —— 21.	11 16¼	87 32	8 54	27 34	158 37	5	
	11 50	N 74 15 E	8 53	26 15	158 40	5	
☉ —— 23.	14 2	72 46	8 44	25 31	159 15	6	
☿ —— 26.	10 3⅘	74 25	8 17	23 21	159 2	5	
♃ —— 27.	12 30	72 55	8 23	22 48	159 20	5	
☉ —— 30.	8 45	75 20	6 50	20 43	158 40	6	
	9 46	74 23	7 21	20 43	158 39	5	
☽ —— 31.	15 19	71 54	6 58	21 4	159 3	6	
♂ April 1.	7 31½	74 14 1/6	7 44	20 4	159 1	6	
☿ —— 2.	17 27	70 24	7 2	20 2	159 3	5	
♃ —— 3.	14 5	70 33⅔	7 56	20 2	159 9	6	
☉ —— 6.	8 44	72 3	7 27	19 32	160 49	5	
☽ —— 7.	14 48¼	68 50⅓	7 58	19 12	161 30	5	
♂ —— 8.	15 54	68 2	7 52	19 1	161 54	4	The ship steady.
♀ —— 11.	10 45	69 0	8 2	18 15	163 56	6	
☽ —— 14.	10 24¾	68 33	7 27	18 7	164 40	6	
♂ May 13.	12 54½	N 75 17 W	11 1	20 9⅓	164 42	6	
☿ —— 14.	9 18	76 11	10 13	20 11	165 4	5	
☽ June 2.	9 24	N 54 12 E	7 46	19 53⅔		6	
♃ —— 5.	13 52	50 31	8 29	19 53⅔	175 0	6	At Annamocka.
♀ —— 6.	7 34	N 72 27½ W	10 9	19 53⅔		6	
♂ July 18.	8 26	N 54 23 E	8 43	22 25	174 10	5	
♃ —— 24.	6 37⅓	55 57⅓	8 18	25 45¾	167 43	6	
♂ Aug. 5.	15 15	N 69 8 W	8 6	26 44	153 21	4	
☿ —— 6.	12 17	N 56 28 E	8 12	25 17	150 19	6	
♃ —— 7.	13 5⅔	57 40	7 30	24 6	150 30	5	
♂ Dec. 9	9 51	S 61 52½ W	7 0	15 30	152 14	5	Off Bolabola.
	18 2	S 76 35 E	6 17	14 47	152 20	5	
♄ —— 13.	17 26	75 15	6 15	11 20	154 10	6	
☉ —— 14.	10 8½	S 62 17 W	5 45	10 46	154 33	5	
☽ —— 15.	12 20	S 73 48 E	5 50	9 10	154 40	6	

1777.	Observed Alt. of the ☉'s L. L.	Magnetic Azimuths of the ☉'s Center.	Variation.	Latitude in.	Longitude in.	N° of Observations.	Remarks.
	° ′	° ′	° ′	° ′	° ′		
♂ Dec. 16.	9 37	S 61 40 W	5 50 E	8 45 S	155 0 W	6	
♃ —— 18.	15 19⅓	S 72 18 E	4 38	5 13	155 50	5	
♀ —— 19.	13 14	S 61 55 W	5 7	4 39	155 33	4	
☉ —— 21.	10 30	60 57	5 31	1 48	157 20	5	Fine weather.
☽ —— 22.	13 49	S 71 48 E	6 8	0 24 N	157 30	6	
☿ —— 24.	8 5	71 20	5 18	1 52	157 35	6	
♃ —— 25.	13 22	S 60 0 W	5 18	1 57		6	
	10 32	S 71 42½ E	5 50	1 57	157 30	6	At Turtle Island.
♀ —— 26.	14 37	S 59 50 W	5 22	1 57		6	
1778.	16 59	S 70 54 E	6 6	1 57		5	
☽ Jan. 5.	15 11¾	71 9⅙	6 25	5 36	157 20	5	
☿ —— 7.	9 37	71 35	5 51	7 33	155 30	5	
♃ —— 8.	13 26	70 14	5 26	7 59	155 15	6	
♄ —— 10.	9 4	S 60 30 W	5 10	9 42	155 20	6	Fine weather.
	16 31	S 69 53 E	5 41	9 42	155 20	6	
♃ —— 15.	13 5	S 55 15 W	6 59	18 1	158 55	5	
	7 46	S 73 4 E	8 28	18 42	159 0	6	
	19 58	N 88 35 W	8 17	18 42	159 4	5	This by the Moon.
♀ —— 16.	11 34	S 73 1 E	9 1	20 4	159 10	6	
♄ —— 17.	9 36	72 42	9 24	21 7	159 25	6	
☉ —— 18.	9 38	72 55	9 35	21 34	159 25	6	
☽ —— 19.	8 41	S 55 10 W	8 40	21 52	159 45	5	
	15 49	51 6	8 52	21 56	159 50	6	
☉ —— 25.	13 10	S 73 39 E	9 21	21 26	160 0	6	
☽ —— 26	14 22	72 30	9 37	21 36	160 0	6	Off Oneehow, the westermost of Sandwich Islands.
☿ —— 28.	8 24	75 30	8 52	21 44	160 0	6	
☽ Feb. 2.	12 23	75 10	9 26	22 47	160 48	5	
♂ —— 3.	10 58	76 0	9 44	24 13	160 50	5	
☿ —— 4.	13 47	S 55 0 W	9 26	24 48	160 51	6	
♀ —— 6.	6 31	S 80 5 E	11 39	28 35	160 9	6	
☉ —— 8.	7 4	80 30	12 28	30 53	158 27	6	
☽ —— 9.	6 20	S 56 30 W	12 3	31 6	158 20	5	
♀ —— 13.	25 29	66 33	12 41	31 30	153 46	6	
	7 39	S 57 30 E	12 0	31 37	153 56	5	
♂ —— 17.	7 42	83 0	13 46	36 6	154 4	6	
☿ —— 18.	9 40	82 30	14 52	37 15	153 58	6	
♃ —— 19.	13 46	S 49 0 W	14 38	37 30	152 57	5	
♄ —— 21.	7 39	S 84 35 E	15 10	40 2	149 51	6	
☉ —— 22.	13 17	S 48 0 W	15 42	40 27	147 23	5	
	8 10	S 85 20 E	16 22	41 2	144 20	5	
♂ —— 24.	18 4	S 41 30 W	16 44	41 46	142 16	6	
♄ —— 28.	32 23	32 23	17 5	44 27	152 45	5	
	10 48	S 84 53 E	17 33	44 46	132 20	6	
☉ March 1.	15 18	S 44 30 W	17 30	44 54	131 14	5	
	12 9	S 84 30 E	18 26	44 51	131 10	6	
☽ —— 2.	15 41	S 44 48 W	19 6	44 47	131 11	6	

1778.	Observed Alt. of the ☉'s L. L.	Magnetic Azimuth of the ☉'s Center.	Variation.	Latitude in.	Longitude in.	N of Observations.	Remarks.
	° ′	° ′	° ′	° ′	° ′		
☿ Mar. 4.	16 27	S 45 30 W	17 42 E	43 57 N	128 20 W	6	Blowing, squally weather.
♀ —— 6.	17 52	80 0 E	17 22	44 30	125 5	10	
♄ —— 7.	15 45	49 0 W	16 26	44 26	124 46	6	
☉ —— 8.	22 12	75 30 E	16 38	43 50	124 43	6	
☿ —— 11.	23 44	42 49 W	15 47	43 37	124 56	4	
☿ —— 18.	15 43	88 37 E	16 8	44 44	125 44	6	
♃ —— 19.	18 44	52 47 W	16 13	45 3	126 0	5	
♂ —— 24.	17 11	54 55	17 15	47 47	125 26	6	
♀ —— 27.	10 58	64 3	17 17	48 8	127 51	6	
☿ April 29.	18 20	69 5	21 3	53 6	126 40	5	
♃ —— 30.	20 21	66 47	20 15	53 38	133 5	6	
♀ May 1.	27 14	N 81 45 E	23 9	56 26	135 38	5	
♄ —— 2.	19 51	S 64 13 W	23 11	57 17	135 50	6	
☉ —— 3.	15 14	N 58 21 E	26 21	58 11	137 40	5	
☽ —— 4.	18 5	S 64 21 W	26 35	58 32	139 15	6	Fine moderate weather.
	19 41	N 65 2 E	26 22	58 30	139 30	5	
♂ —— 5.	19 56	65 3	26 21	58 49	139 4	6	
☿ —— 6.	16 7	57 41	26 59	59 23	139 3	5	
♃ —— 7.	14 49	S 71 2 W	26 42	59 28	140 32	6	
♀ —— 8.	16 33	N 57 43 E	26 35	59 33	141 37	5	
♄ —— 9.	16 9½	S 70 2 W	26 48	59 31	142 45	6	
♂ —— 19.	24 27	59 45	27 15	60 12	147 48	5	
♄ —— 23.	26 50	N 67 7 E	25 37	58 14	155 3	6	
☉ —— 24.	14 37	S 79 28 W	26 16	58 16	151 4	5	Squally weather.
☽ June 1.	30 18	N 69 0 E	30 14	61 1	151 30	6	
	30 49	70 20	30 6	61 1	151 32	6	
♂ —— 2.	27 58	64 7	30 21	60 43	151 38	5	In Seduction River.
☿ —— 3.	31 56	72 59	29 25	61 11	152 0	6	
♃ —— 4.	18 19	S 76 27 W	26 39	60 1	152 34	5	
♀ —— 5.	23 25	N 57 15 E	27 41	59 0	152 46	6	
♃ —— 11.	27 35	65 10	24 32	56 53	152 3	6	
♀ —— 12.	14 35	S 86 13 W	23 45	57 1	153 35	6	
♄ —— 13.	16 9	85 48	21 52	56 40	154 10	5	
♂ —— 16.	21 9	78 13	22 21	55 47	157 30	6	
☿ —— 17.	21 1	79 0	21 50	55 27	158 20	6	
♃ —— 18.	20 24	81 25	20 17	55 12	158 1	6	
☉ —— 21.	13 52	N 90 0 W	20 46	54 11	162 7	5	
	25 38	64 43 E	20 15	53 49	162 19	6	
♀ —— 26.	18 5	54 45	20 25	53 51	166 7	6	In Providence Bay, at the Island of Oonalaſchka.
♃ July 2.	15 45	S 87 30 W	20 4	54 34	166 10	5	
☉ —— 5.	25 11	N 64 40 E	22 4	56 59	160 47	6	
☽ —— 6.	25 49	S 69 40 W	22 34	56 56	160 11	6	
♂ —— 7.	24 26	N 62 15 E	23 49	57 13	159 37	5	
♃ —— 9.	24 20	S 69 47 W	23 37	58 11	158 2	6	
	28 9	N 68 37 E	24 5	58 20	158 0	5	
♀ —— 10.	27 48	S 62 50 W	24 44	58 17	158 29	6	

1778.	Observed Alt. of the ☉'s L L.	Magnetic Azimuth of the ☉'s Center	Variation.	Latitude in.	Longitude in.	N° of Observations	Remarks.
	° ′	° ′	° ′	° ′	° ′		
☉ July 12.	23 5	S 70 23 W	24 11 E	58 27 N	159 25 W	6	In Providence Bay, at the Island of Oonolaschka.
	23 45	N 62 53 E	23 45	58 20	159 20	5	
♂ —— 14.	20 17	S 70 0 W	23 28	58 18	161 0	5	
☿ —— 15.	18 6	N 55 16 E	23 14	58 29	161 20	4	
♃ —— 16.	21 2	60 49	22 47	58 46	161 48	5	Thick foggy weather.
☉ —— 19.	25 42	S 66 0 W	21 30	59 37½	162 33	6	
☽ —— 20.	22 38	71 45	22 45	59 38	162 27	5	
♄ —— 25.	22 12	N 69 40 E	19 6	58 31	168 0	6	
☉ —— 26.	20 40	S 74 17 W	19 11	58 49	168 0	6	
☿ —— 29.	16 49	75 37	22 41	60 18	172 22	5	
♀ —— 31.	20 8	N 66 24 E	22 48	61 54	170 30	6	
☉ Aug. 9.	25 43	85 33	24 27	65 37	168 55	6	
	15 31	S 68 35 W	24 45	65 36½	169 45	5	
☽ —— 10.	12 19	N 54 20 E	25 36	66 0	169 50	5	
☿ —— 12.	19 21	S 57 34 W	25 24	66 17	169 11	6	
♃ —— 13.	16 58	61 10	26 22	66 33	168 11	5	
☉ —— 16.	22 50	N 80 40 E	34 55	70 21	166 24	6	Moderate weather.
♂ —— 18.	15 42	S 51 35 W	33 3	70 25	161 56	5	
	20 13	N 75 18 E	33 28	69 53	162 40	6	
☿ —— 19.	16 32	S 48 30 W	32 24	70 15	163 42	5	
♀ —— 21.	17 28	44 33	32 45	69 31	164 38	5	
	17 28	44 33	33 0	69 31	164 27	6	
☽ —— 24.	23 57	S 80 33 E	27 17	69 17	170 12	5	
♃ —— 27.	24 33	69 25	26 55	69 20	177 5	6	
♂ Sept. 1.	23 47	77 2	26 48	66 50	172 51	5	Fresh breezes but smooth water.
☿ —— 2.	15 44	S 46 30 W	26 24	66 30	170 48	6	
	10 3	N 68 10 E	25 32	65 40	170 30	6	
♃ —— 3.	16 4	S 46 10 W	25 12	65 24½	171 10	6	
	12 43	N 75 29 E	24 47	64 55	171 50	6	
♀ —— 4.	16 37	S 46 41 W	24 11	64 29	172 13	5	
♄ —— 5.	20 43	S 84 20 E	25 26	63 55	170 21	6	
☉ —— 6.	15 26	S 47 33 W	25 45	63 58	176 50	5	
☽ —— 7.	14 33	47 55	25 1	64 21	176 0	5	
♂ —— 8.	11 57	50 48	27 22	64 21	164 10	5	
☿ —— 9.	12 25	77 20	28 22	64 40	162 17	4	
♃ —— 10.	9 8	53 37	27 30	64 27		6	
♄ —— 12.	10 34	N 76 30 E	27 0	64 32⅓		5	
♂ —— 15.	11 9	S 45 45 W	27 21	64 22	162 34	6	In Norton Bay.
☿ —— 16.	11 26	43 57	27 25	64 22		5	
♃ —— 17.	12 46	N 83 36 E	28 50	64 11		6	
♀ —— 18.	11 36	82 20	28 18	63 34	162 12	5	
♄ —— 19.	12 27	88 31	25 17	63 47	164 22	4	
♂ —— 22.	13 15	S 44 25 W	20 17	61 34	170 46	4	
♄ —— 26.	17 53	S 74 20 E	20 20	58 38	170 44	5	
☉ —— 27.	11 9	S 47 0 W	20 38	58 41	170 16	6	
☽ —— 28.	9 35	48 15	21 49	57 55	169 20	4	

1778.	Observed Alt. of the ☉'s L.L.	Magnetic Azimuth of the ☉'s Center.	Variation.	Latitude in.	Longitude in.	No. of Observations.	Remarks.
	° ′	° ′	° ′	° ′	° ′		
♂ Sept. 29.	15 3	S 82 10 E	22 15 E	56 37 N	167 38 W	5	In Norton Bay.
☿ —— 30.	8 28	S 49 30 W	22 0	56 29	167 0	4	At the island of Oonalaschka.
♄ Oct. 10.	75 12	34 56	20 22	53 55	166 30	6	
☉ —— 11.	81 15	S 85 38 E	20 28	53 55	166 30	6	
☽ —— 12.	74 10	S 32 10 W	20 24	53 54¾	166 30	6	
♀ Nov. 6.	5 35	45 5	17 12	42 13	158 43	6	
♄ —— 7.	13 8	S 70 45 E	16 59	40 47	157 51	6	
☉ —— 8.	6 10	S 45 28 W	16 22	40 20	157 45	6	
♄ —— 14.	10 4	S 72 13 E	12 39	33 46	152 34	5	
☉ —— 29.	11 52	68 4	8 32	20 4	155 39	6	
☽ —— 30.	15 18	65 55	8 13	20 5	155 23	5	
1779.							
♀ Jan. 1.	10 12	S 52 18 W	8 18	20 9	153 15	6	Off Oeyhee the N. E. side.
	14 17	S 68 37 E	8 27	20 0	153 15	6	
♄ —— 2.	11 38	68 10	8 12	20 13	153 24	6	
☉ —— 3.	8 32	S 53 45 W	7 57	20 3	153 24	6	
☽ —— 4.	11 29	52 45	7 47	19 25	154 2	5	
	16 44	S 65 47 E	7 45	19 29	154 0	5	
♂ —— 5.	8 47	70 3	7 47	19 5	154 59	4	Off the East end of Oeyhee.
☿ —— 6.	12 15	N 70 55 E	10 11	18 57	155 45	5	
♀ —— 8.	10 27	S 52 30 W	9 18	18 59	156 14	5	
☉ —— 10.	9 2	S 70 32 E	7 34	18 46	155 33	5	Among Sandwich islands.
☿ —— 13.	11 26	S 53 17 W	10 16	19 3	155 48	4	
♄ —— 16.	13 17	51 37	10 3	19 25	156 10	4	
☿ Feb. 24.	9 54	85 13 E	9 13	20 36	156 52	4	
♃ —— 25.	17 16	81 47	8 59	21 3	157 2	4	
♄ —— 27.	17 13	53 58	10 46	22 13	158 6	5	
☉ —— 28.	10 46	S 66 15 W	10 25	21 59	159 26	5	
♂ Mar. 16.	12 22	73 3	10 3	21 26	161 19	6	
♀ —— 17.	17 16	N 87 40 E	10 39	21 16	163 12	5	
♃ —— 18.	13 45	86 33	9 51	21 13	164 50	5	
♀ —— 19.	11 35	84 21	10 37	20 56	165 48	5	
☉ —— 21.	18 30	86 7	10 41	20 32	167 48	4	
♂ —— 23.	19 19	84 28	11 32	19 52	171 18	6	
☿ —— 24.	13 10	81 26	11 48	19 59	173 50	6	
♃ —— 25.	14 18	81 11	11 49	19 52	178 33	6	
♄ —— 27.	11 29	79 15	12 3	20 2	179 11	5	
☉ —— 28.	12 55	79 54	11 28	20 15	179 30	6	
☿ —— 31.	6 37	S 79 30 W	12 22	20 38⅓	180 0	6	Fine weather.
♄ April 3.	16 0	75 25	12 55	24 51	175 26 E	6	
☿ —— 7.	7 27	N 83 15 W	10 15	30 8	168 21	5	
	9 2	N 76 12 E	11 0	30 27	168 19	4	
♃ —— 8.	21 21	S 75 21 W	10 3	30 51	167 1	4	
♀ —— 16.	16 57	N 83 52 E	7 52	42 50	160 11	3	
☉ —— 18.	21 3	90 0	7 24	48 18	160 30	3	
☽ —— 19.	13 31	80 2	7 58	49 40	161 1	4	

1779.	Observed Alt. of the ☉'s L. L	Magnetic Azimuths of the ☉'s Center.	Variation.	Latitude in.	Longitude in.	N° of Observations.	Remarks.
	° ′	° ′	° ′	° ′	° ′		
☿ April 21.	18 46	S 74 44 W	6 52 E	50 39 N	162 7 E	3	Fine weather.
♂ —— 27.	23 11	S 88 45 E	6 9	52 22	160 23	5	
☿ —— 28.	24 6	S 75 14 W	6 10	52 28	159 15	5	
♃ —— 29.	20 59	N 80 6 E	6 0	52 46	159 25	5	
	12 35	S 76 32 W	6 0	52 41	159 30	6	
☽ May 3.	20 30	82 50	6 10			6	
	13 27	88 10	6 36			10	
♄ —— 15.	64 4	80 49	6 47			10	
☉ —— 16.	60 26	76 40	6 28	52 28	158 45	6	In Awatchia Bay, at Kamtschatka.
♂ —— 18.	64 21	N 84 54 E	6 16			6	
	55 36	S 83 38 E	6 30			8	
♃ —— 20.	73 50	N 71 51 E	6 3			10	
♀ —— 21.	63 57	83 38	6 6			6	
♃ June 17.	19 8	N 84 37 W	8 13	52 45	159 11	5	Moderate, with fine weather.
	28 11	N 80 32 E	7 24	52 44	159 46	6	
☉ —— 20.	20 30	N 88 1 W	9 25	55 20	163 11	6	
	25 0	N 76 33 E	9 15	55 49	163 50	6	
☽ —— 21.	16 1	N 82 3 W	10 11	56 6	164 3	6	
☿ —— 23.	25 27	N 75 14 E	11 16	58 9	165 46	6	
♃ —— 24.	18 39	N 87 41 W	12 3	58 34	167 16	6	
	28 37	79 38	12 22	59 1	168 2	5	
☉ —— 27.	13 13	79 39	13 37	60 28	175 29	4	
☽ —— 28.	20 52	81 49	18 31	62 5	175 44	5	Hazy with rain.
♂ —— 29.	39 9	S 80 22 E	17 12	61 50	178 26 E	5	
♄ July 3.	24 5	S 69 47 W	23 27	63 42	173 5 W	4	
♀ —— 9.	32 45	36 20	28 42	69 6	171 25	6	
♄ —— 10.	23 27	66 4	25 14	67 58	170 57	5	
☉ —— 11.	21 24	S 67 33	28 27	68 6	170 35	4	
☽ —— 12.	24 10	N 64 0 E	27 46	69 33	170 50	4	
♄ —— 17.	33 8	S 24 0 W	33 40	70 0	166 41	6	
	21 45	N 54 33 E	33 37	70 16	166 36	6	
☉ —— 18.	25 38	64 0	35 30	70 20	163 52	6	
☿ —— 21.	25 22	72 49	26 35	69 32	166 51	6	
♄ —— 24.	25 17	S 53 36 W	25 54	68 51	171 25	6	Moderate.
♂ —— 27.	21 37	N 65 46 E	26 24	67 11	171 23	6	
♀ —— 30.	20 37	67 17	23 37	65 36	168 40	6	
♄ —— 31.	20 7	S 66 11 W	23 57	65 1	170 33	6	
	20 13	N 66 48 E	22 32	64 35	170 24	6	
☽ Aug. 2.	18 27	S 68 43 W	23 59	64 4	170 17	6	
♄ —— 7.	19 41	70 34	18 26	59 30	176 40	6	
	11 48	N 60 48 E	17 12	59 16	179 12 W	6	
♂ —— 10.	15 39	74 13	11 39	57 32	174 18 E	5	
☿ —— 11.	13 45	S 86 9 W	10 43	57 14	172 33	5	
♃ —— 12.	23 58	70 17	11 37	56 17	171 46	5	
	25 26	N 89 49 E	11 27	55 32	170 40	5	
☽ —— 16.	28 27	S 82 23 E	9 29	53 54	170 32	5	

1779.	Observed Alt. of the ☉'s L. L.	Magnetic Azimuth of the ☉'s Center.	Variation.	Latitude in.	Longitude in.	N° of Observations.	Remarks.
	° ′	° ′	° ′	° ′	° ′		
♂ Aug. 17.	20 30	S 74 42 W	10 0 E	53 42 N	168 11 E	6	Hazy.
♄ —— 21.	17 26	86 16	7 14	53 50	161 50	6	
☽ Oct. 11.	12 52	53 10	6 56	51 57	158 30	5	
	8 45	S 71 45 E	6 0	51 3	158 20	5	
♂ —— 12.	8 16	S 72 28 W	5 10	50 50	157 20	5	Squally with a rough sea.
	14 18	S 52 49 E	5 25	50 55	157 0	5	
☿ —— 13.	16 51	S 50 40 W	4 10	49 37	156 47	3	
♃ —— 14.	9 10	62 16	4 30	47 57	155 25	4	
	7 51	S 73 28 E	4 42	46 44	155 30	4	
♀ —— 15.	6 53	75 15	5 15	45 29	155 36	4	
☉ —— 17.	6 5	S 65 24 W	5 0	45 2	155 38	4	
	7 17	S 74 4 E	4 50	44 30	155 34	5	
♃ —— 21.	4 9	S 67 30 W	4 0	42 20	149 41	6	
☽ —— 25.	2 27	70 52	1 8	40 9	143 54	6	
	12 32	S 62 5 E	0 23	40 2	143 0	6	
☿ —— 27.	13 51	61 57	1 23	38 17½	142 59	6	Fine weather.
♀ —— 29.	5 20	70 5	1 42	37 4	141 25	6	
☉ —— 31.	8 28	66 56	2 28	35 40	142 4	5	
♃ Nov. 4.	8 42	S 60 30 E	3 18	35 42	146 25	5	
♀ —— 5.	8 27	S 67 30 W	3 48	35 3	147 4	5	Squally.
♄ —— 13.	13 19	S 67 57 E	4 39	25 35	143 7	5	
	10 59	S 67 57 E	3 25	24 43	142 30	4	
☉ —— 14.	9 53	S 61 22 W	3 14	24 34	142 2	4	
	13 42	S 65 37 E	3 49	24 51	141 38	4	
☽ —— 15.	13 43	63 57	2 35	25 6	141 6	5	
♂ —— 16.	18 0	S 55 57 W	2 17	25 3	138 56	5	Blowing weather.
	8 6	S 67 22 E	2 42	24 52	138 30	5	
♃ —— 18.	28 14	52 35	1 7	22 55	135 40	4	
♄ —— 20.	23 11	S 55 8 W	0 6	21 56	131 4	4	
☉ —— 21.	19 16	57 47	0 31	21 19	128 42	4	
☉ —— 28.	12 32	62 0	1 0	20 49	116 36	4	
☿ Dec. 1.	5 40	S 63 9 E	0 21 W	22 7	113 37	5	In the Typa.
1780.							
♀ Jan. 14.	8 28	63 56	0 2 E	19 25	113 50	5	
☉ —— 16.	12 2	64 0	0 10 W	15 3	113 11	4	
☿ —— 19.	10 39	66 46	0 28	8 58	107 3	4	
♀ —— 28.	10 21	71 2	1 0	7 11	105 58	6	
☉ —— 30.	18 53	S 68 37 W	0 31 E	4 43	104 58	6	Fine weather.
	24 52	S 69 20 E	0 36	3 37	104 35	5	
☽ —— 31.	14 19	S 70 23 W	1 19	3 3	105 21	6	
	14 29	S 71 39 E	0 3 W	1 36 N	105 19	6	
♂ Feb. 1.	12 17	72 17	0 19	0 1 S	105 25	6	
☿ —— 2.	17 28	S 72 27 W	0 5	0 46	105 30	6	
	15 23	S 73 17 E	0 7	1 40	105 32	6	
♄ —— 5.	16 20	S 75 31 W	1 11	3 27	106 25	6	
♀ —— 16.	14 15	S 78 10 E	0 54	6 36	105 11	6	

1780.	Observed Alt. of the ☉'s L. L.	Magnetic Azimuth of the ☉'s Center.	Variation.	Latitude in.	Longitude in.	N° of Observations.	Remarks.
	° ′	° ′	° ′	° ′	° ′		
♀ —— 18.	16 15	S 79 35 E	0 35 W	7 22 S	105 1 E	6	Fine weather.
☉ Feb. 20.	10 39	80 1	0 43 E	9 15	104 54	4	
☿ —— 23.	19 53	83 11	1 3	12 46	103 36	6	
♀ —— 25.	18 21	83 50	0 18 W	13 40	101 21	6	
♄ —— 26.	7 41	82 12	0 52	13 46	99 50	5	
☽ —— 28.	18 19	85 3	1 51	15 45	97 33	6	
♃ Mar. 2.	15 53	86 30	1 34	17 53	89 25	6	
♀ —— 3.	25 1	89 37	2 3	18 19	87 23	6	
☽ —— 6.	19 40	87 37	4 3	19 33	78 40	5	
♃ —— 9.	18 22	87 5	5 45	20 36	72 30	6	
♄ —— 11.	16 40	85 20	7 52	21 4	69 20	5	
☽ —— 13.	11 26	81 59	10 11	21 31	65 0	6	
☿ —— 15.	15 19	82 19	12 45	23 9	61 20	6	
♀ —— 17.	13 25	80 55	14 43	25 0	58 45	6	
☉ —— 19.	21 16	82 1	17 35	26 29	54 48	6	
♂ —— 21.	19 57	80 52	21 28	27 51	50 49	6	
♃ —— 23.	17 1	75 52	26 2	29 3	43 46	4	
♀ —— 24.	75 33	75 33	25 35	29 33	40 54	6	
☉ —— 26.	16 0	77 10	26 28	30 56	37 20	5	
♂ —— 28.	11 33	75 24	26 18	31 34	34 20	6	Blowing weather.
♃ —— 30.	10 56	76 55	24 53	31 18	32 19	5	
♄ April 1.	13 56	80 16	25 44	33 18	28 54	6	
☉ —— 2.	10 10	51 36	24 50	33 41	28 26	6	A rough sea.
☽ —— 3.	15 0	84 31	24 21	35 19	24 11	5	
☿ —— 5	12 31	84 10	23 58	35 56	21 46	6	
♀ May 12.	8 17	N 82 20 E	20 56	32 43	16 30	6	
☉ —— 14.	7 49	82 30	19 58	30 8	10 42	5	
☿ —— 17.	12 57	77 0	17 16	26 40	5 19	6	
♀ —— 19.	9 2	78 29	15 43	24 37	0 18 W	5	
☉ —— 21.	13 49	74 42	14 18	22 26	3 56	6	
♂ —— 23.	31 5	61 3	12 29	19 46	6 0	6	
☿ —— 24.	10 43	75 33	11 41	18 27	9 30	4	
♄ —— 27.	18 44	N 49 1 W	11 3	15 45	13 0	6	
	13 13	N 74 4 E	11 10	15 5	13 18	4	Fine weather.
♂ —— 30.	11 38	N 53 11 W	10 33	13 34	15 20	4	
	21 10	N 70 49 E	10 57	12 54	15 40	6	
☿ —— 31.	18 26	72 5	10 40	12 4	16 18	4	
♀ June 2.	13 20	74 26	10 50	10 45	17 48	6	
☉ —— 4.	19 36	71 2	9 8	9 0	20 30	5	
☿ —— 7.	13 10	73 22	8 26	5 12	23 48	6	
♀ —— 9.	9 8	73 35	7 17	1 30	26 0	4	
☽ —— 12.	11 49	73 17	6 21	3 31 N	26 26	6	
♂ —— 13.	11 39	74 22	7 18	4 12	26 0	6	
♃ —— 15.	12 54	75 23	8 15	5 11	25 40	4	
☉ —— 18.	14 43	76 27	8 51	7 19	27 50	6	
♂ —— 20.	19 22	75 22	7 10	9 4	27 30	3	

1780.	Observed Alt. of the ☉'s L. L.	Magnetic Azimuth of the ☉'s Center.	Variation.	Latitude in.	Longitude in.	No. of Observations.	Remarks.
	° ′	° ′	° ′	° ′	° ′		
♃ June 22.	22 8	N 76 3 E	8 5 W	9 37 N	28 46 W	6	Fine weather.
☉ —— 25.	20 29	77 31	7 59	12 41	31 46	6	
♂ —— 27.	30 33	78 41	7 8	15 11	34 0	6	
♀ —— 30.	28 31	80 10	6 8	19 44	37 40	6	
♄ July 1.	16 23	77 29	6 19	21 4	38 15	6	
♂ —— 4.	33 3	86 15	7 55	25 18	40 14	5	
♃ —— 6.	18 2	81 31	8 5	27 48	41 2	5	
♄ —— 8.	17 15	81 2	7 18	29 24	41 40	5	
☽ —— 10.	15 42	82 35	9 11	30 28	41 56	5	
☿ —— 12.	13 20	83 54	10 16	36 5	42 0	5	
♀ —— 14.	10 18	81 9	10 1	35 25	41 36	4	
☉ —— 16.	13 53	85 4	11 10	36 5	41 0	4	
♂ —— 18.	32 5	S 81 10 E	11 30	36 58	38 50	5	
♀ —— 21.	13 23	89 3	15 9	38 10	37 20	5	
♄ —— 22.	16 51	N 62 25 W	15 11	38 25	37 19	5	
☉ —— 23.	18 46	S 85 25 E	15 7	38 41	37 6	5	
♃ —— 27.	21 32	N 66 19 W	16 43	44 24	33 50	4	Hazy weather.
♄ —— 29.	22 4	66 14	17 55	42 33	29 0	4	
☉ —— 30.	16 1	S 81 26 E	18 28	43 20	27 20	4	
☿ Aug. 2.	23 30	71 1	20 23	44 45	23 15	5	Ship very ſteady.
♄ —— 5.	26 22	N 71 49 W	21 17	45 59	19 20	6	
	20 29	S 71 17 E	21 18	46 25	19 0	6	
☉ —— 6.	24 54	65 35	22 9	48 18	18 30	6	
♀ —— 11.	28 9	N 77 36 W	25 14	52 41	16 10	6	
♄ —— 12.	11 50	S 72 24 E	25 50	52 48	15 54	6	A rough ſea.
☉ —— 13.	17 19	N 65 2 W	25 26	52 51	15 39	6	
♂ —— 15.	12 22	S 72 12 E	24 30	55 3	15 10	4	
♃ —— 17.	23 24	N 77 5 W	24 45	56 6	13 26	4	
♀ —— 18.	23 19	78 8	24 12	56 8	11 50	5	
	15 39	S 65 3 E	24 0	56 25	10 49	6	Smooth water.
☉ —— 20.	22 47	51 30	23 10	58 44	4 40	6	
♀ —— 25.	55 42	20 10	24 31	58 57	3 31	6	At Strumneſs at the Orkneys.
♄ —— 26.	62 13	S 85 53 W	24 32½				

DIPS OF THE MAGNETIC NEEDLE,

OBSERVED ON BOARD

His Majesty's Sloops Resolution and Discovery,

DURING THEIR LATE VOYAGE ON DISCOVERIES,

In the Years 1776, 77, 78, 79, and 80.

By WILLIAM BAYLY,

In making these observations care was taken to place the instrument as far as possible from iron, therefore it was generally placed on the binnacle, the steering compasses being removed to a considerable distance during the time; those that were not taken on the binnacle were taken in the great cabin, with the instrument placed on a three-legged stand, so that it was elevated near four feet above the deck. I made many observations both in the cabin and on the binnacle when at anchor, but never found a greater difference than that of two sets taken at the same place would frequently give. I also made observations both on board and on shore at most of the places where we anchored, but seldom found any great difference. When at sea the needle seldom rested quite steady, but vibrated one or more degrees each way, therefore a mean of at least 20 of the extreme vibrations were taken for one observation; and after 10 observations were made with the instrument facing the East and West alternately, the poles were changed and the observations repeated, and a mean of the whole taken for the true dip.

W. BAYLY.

1776.	Marked end N. E.	Marked end N. W.	Marked end S. E.	Marked end S. W.	True Dip.	Latitude in.	Longitude in.	Remarks.
	° ′	° ′	° ′	° ′	° ′	° ′	° ′	
☽ Aug. 12.	68 15	62 48	65 57	67 6	66 1½	33 48 N	15 29½ W	
♂ —— 13.	65 25	66 33	67 22	62 36	65 29	33 10	17 9	
☽ —— 19.	62 12	58 13	60 56	62 5	60 51½	27 39	20 29½	
♀ —— 23.	56 18	58 9	58 12	54 0	56 45	21 0	22 30	
☽ —— 26.	51 26	52 54	51 52	48 32	51 14	16 20	23 42	
♀ —— 30.	44 57	46 55	44 57	42 6	44 39¾	11 0	23 30	
☉ Sept. 8.	29 48	29 30	30 51	34 57	31 16½	4 24	13 50	
☉ —— 15.	24 24	28 42	21 0	23 21	24 21¾	0 42	13 24	
♂ —— 17.	22 21	25 24	19 24	19 55	21 45	0 49 S	14 27	
♀ —— 20.	20 6	23 15	16 54	17 36	17 34⅕	3 33	18 20	
☽ —— 23.	14 10	17 15	10 3	12 57	13 36¼	7 0	20 20	
☿ —— 25.	8 31	11 39	4 9	6 27	7 41½	10 0	21 35	
	5 30	9 50	1 55	4 30	5 50½	11 20	21 57	
♀ —— 27.	2 12	5 45	2 45	0 30	1 25½	13 30	23 0	N. end dip.
	+ 0 48¾	+ 3 11¼	— 2 11¼	— 5 15	— 1 16	14 51	23 16	S. end dip.
	+ 4 11½	— 5 3¾	+ 1 26¼	+ 1 22½	— 1 36½	14 51	23 16	S. end dip.
☉ —— 29.	8 3	6 30	14 12	9 48	9 38¼	18 45	24 0	
♂ Oct. 1.	11 51	8 24	15 27	12 27	12 2¼	20 49	24 40	
♄ —— 5.	19 39	17 33	23 12	18 30	19 42	24 40	23 51	
♂ —— 8.	28 5	28 25	27 5	27 50	27 51¼	28 47	20 50	
☽ —— 14.	31 33	32 57	30 33	32 27	31 52½	30 24	17 18	
♄ —— 19.	34 48	36 42	40 24	37 12	37 16½	33 41	2 40	
☽ —— 21.	40 57	37 30	37 51	40 0	39 4¼	33 40	1 32 E	
♄ —— 26.	39 36	42 45	43 17	40 17	41 26½	34 5	8 50	
♀ Nov. 8.	43 39	47 33	47 48	44 12	44 48	34 5	17 50	
♃ Dec. 5.	52 51	49 50	49 19	54 12	51 33	38 54	23 30	
♀ —— 13.	58 33	64 6	62 0	60 18	61 14¼	47 40	43 40	
♂ —— 17.	65 45	65 39	62 27	67 33	65 36	48 24	55 20	
♃ —— 19.	66 48	68 57	66 45	66 6	66 54	47 40	63 40	
♄ —— 21.	68 42	68 42	65 36	71 33	68 38¼	48 17	65 15	
♀ —— 27.	65 50	71 13	68 24	68 8	68 26	48 41	69 0	
	65 18¾	70 34½	68 30	67 46½	68 14	48 41	69 0	

1777.	Marked end N. E.		Marked end N. W.		Marked end S. E.		Marked end S. W.		True Dip.		Latitude in.		Longitude in.		Remarks.
	°	′	°	′	°	′	°	′	°	′	°	′	°	′	
♀ Jan. 3.	67	0	71	57	69	36	69	27	69	20	48	17 S	84	20 E	
☿ —— 8.	71	15	70	55	69	0	74	4	71	18½	48	20	101	50	
♄ —— 11.	70	7	75	22	72	7	72	18	72	27	48	15	109	16	
☽ —— 13.	70	54	75	55	73	34	73	8	73	22¾	47	50	113	5	
	71	5¼	75	50	74	45	71	3⅓	73	10¼	47	50	113	5	
♃ —— 16.	69	5	74	9	71	30	71	33	71	34¼	44	17	127	55	
☿ —— 22.	68	38	73	35	70	46	71	0	71	0	43	41	147	20	
☽ —— 27.	69	2	74	0	69	45	70	40	70	55⅓	43	21	147	33	On ſhore at Vandieman's Land.
☿ —— 29.	68	51	73	33	70	36	71	2	71	0⅔	43	21			
♄ Feb. 4.	67	22	72	32	69	17	69	53	69	46	43	40	159	30	
☉ —— 9.	62	30	67	36	65	5	64	36	64	56¾	40	33	171	20	
☿ —— 19.	62	5	67	17	64	35	64	31	64	39⅓	41	5	174	5	
☽ Mar. 3.	61	46	66	50	64	26	64	27	64	22¼	42	0	183	0	
☽ —— 10.	56	38	62	14	59	55	59	46	59	38¼	39	23	195	15	
♄ —— 15.	51	19	56	6	53	38	53	43	53	41¼	33	40	198	40	
♀ —— 21.	43	25	46	26	45	11	44	10	44	48	26	50	201	30	
☉ —— 30.	35	16	38	19	38	22	35	48	36	50¾	21	53	202	0	
♄ April 5.	32	7	32	12	35	2	32	11	32	53	19	14	200	4	
☿ —— 16.	31	49	32	17	34	1	30	59	32	16½	18	6	196	20	
	31	21⅗	32	33	34	6	31	6⅖	32	16¾	18	8	196	3	
♄ June 7.	37	6	40	0	39	39	37	35	38	15	20	14	185	0	At Annamocka.
	37	30	39	56	39	46	37	35	38	41¾	20	14	185	0	
♂ Dec. 9.	24	6	23	30	26	5	22	19	24	0	14	36	207	36	
♄ —— 13.	17	52	16	33	18	30	16	6	17	15¾	11	14	205	30	
☿ —— 17.	10	32	7	36	11	9	7	20	9	9¼	7	24	204	16	
♃ —— 18.	8	26	4	26	9	28	5	7	6	56¾	6	10	204	24	
♀ —— 19.	5	36	0	26	6	0	1	5	3	16¾	4	36	204	0	
	0	29	1	12	0	42	1	24	0	56¾	3	41	203	40	
	3	12	1	41	3	9	1	25	0	48¾	3	40	203	40	South pole dip.
♄ —— 20.	0	9	0	8	0	6	0	15	0	9½	3	16	203	36	North pole dip.
☉ —— 21.	2	56	3	6	3	23	2	54	3	4¾	1	50	202	50	
☽ —— 22.	6	5	5	55	7	8	4	56	6	1	0	20	203	30	
♂ —— 23.	8	23	8	35	9	20	8	2	8	35	0	57 N	202	10	
♃ —— 25.	10	15	12	19	12	27	10	58	11	29¾	1	57	202	30	At Turtle Iſland.
1778.															
☉ Jan. 4.	14	12	17	5	17	12	14	12	15	40¼	4	50	202	25	
♄ —— 10.	24	15	29	24	29	6	24	33	26	49½	10	31	204	30	
♃ —— 15.	35	57	43	56	44	6	35	57	39	49	19	0	200	40	Off Atowi.
☉ —— 18.	39	56	44	37	43	58	41	55	42	36½	21	46	200	30	
♄ —— 31.	39	36	43	45	43	41	40	54	42	4½	21	47	199	55	Off Neehow.
	40	46	42	24	41	40	42	35	41	54	21	47			
♂ Feb. 3.	42	45	48	1	47	28	44	40	45	43½	24	30	199	14	
♃ —— 5.	47	5	50	53	47	13	51	15	48	51½	27	43	200	0	
☽ —— 9.	51	46	55	0	56	26	51	56	53	47	31	16	202	48	
♄ —— 14.	51	11	54	28	55	26	51	36	53	10¼	31	34	205	47	
	53	20	53	26	52	0	53	36	53	5½	31	34	205	47	

1778.	Marked end N. E.		Marked end N. W.		Marked end S. E.		Marked end S. W.		Mean Dip.		Latitude in.		Longitude in.		Remarks.
	°	′	°	′	°	′	°	′	°	′	°	′	°	′	
♂ Feb. 17.	54	13	60	5	58	40	54	36	56	53½	35	4 N	206	0 E	
♀ —— 20.	58	15	60	28	62	19	57	8	59	32½	38	10	207	45	
☉ —— 22.	61	55	63	35	65	23	60	45	62	54½	41	0	215	10	
♃ —— 26.	65	3	65	58	68	0	63	51	65	43	43	20	223	0	
☉ Mar. 1.	67	32	68	31	70	30	67	29	68	31¼	44	51	228	50	
♀ —— 6.	68	30	68	33	70	14	66	39	68	29	44	30	235	20	
♃ —— 19.	70	26	66	16	67	28	69	5	68	19½	44	56	234	26	
♂ —— 24.	69	30	71	12	72	25	68	28	70	23¾	47	44	234	30	
♄ —— 28.	71	48	72	9	74	10	69	28	71	53¾	49	27	233	20	
♀ May 1.	73	11	74	2	75	12	71	52	73	34¼	54	40	224	30	
♂ —— 5.	76	25	76	28	78	24	74	30	76	26¾	58	47	221	3	
☉ —— 17.	77	11	77	28	79	5	74	45	77	7½	60	51	212	38	
☉ —— 31.	75	59	76	16	78	25	73	56	76	9	61	12	208	40¼	
☿ June 10.	73	5¼	74	21	75	55	71	56	73	49⅓	57	10	207	25	
♂ —— 30.	67	14	68	34	71	5	66	29	68	20½	53	54	193	30	At Oonalaſchka.
☉ July 5.	70	35	71	17	73	40	68	34	71	1½	56	33	199	0	
☽ —— 13.	72	23	73	14	75	29	71	18	73	6	58	12	198	18	
☉ —— 19.	72	16	73	16	75	26	71	16	73	3½	59	37	197	15	
☿ Aug. 5.	76	6	76	40	79	4	74	52	76	40½	64	35	192	24	
♂ —— 11.	77	6	77	32	78	47	75	17	77	10½	66	3	190	43	
♂ —— 18.	82	25	81	33	83	35	79	34	81	46¾	70	30	197	45	
☿ —— 26.	78	41	79	2	81	45	76	49	79	4¼	69	37	182	10	
☿ Sept. 2.	77	3	77	7	79	57	74	55	77	15½	66	30	189	0	
☽ —— 7.	75	30	75	45	78	36	76	34	76	36⅙	64	20	195	10	
☉ —— 13.	78	48	78	9	80	9	75	10	76	58⅓	64	21	198	0	In Norton Bay.
	76	42	77	8	79	15	74	16	76	50⅔	64	21	198	0	
☉ —— 27.	72	6	73	1	75	7	70	3	73	34¼	58	38	188	38	
♄ Oct. 3.	68	33	69	34	72	6	66	32	69	11⅓	53	54	193	30	At Samgonooda.
	68	30⅔	69	35	71	58	66	30	69	8⅓	53	54	193	30	
☉ Nov. 15.	54	35	56	49	58	49	54	9	56	3	33	34	207	2	
1779.															
♀ Mar. 19.	39	11	43	43	44	16	42	11	42	20¼	21	12	194	10	
♃ —— 25.	40	4	35	48	39	4	40	15	38	47¾	19	59	184	5	
☽ April 5.	41	7	45	7	44	44	43	43	43	10⅓	25	57	173	47	
♃ —— 8.	40	45	45	19	45	5	43	10	43	35¼	30	54	166	32	
♃ —— 15.	51	31	55	5	56	43	52	34	53	58⅓	41	53	159	40	
♂ —— 20.	59	21	61	25	64	0	58	54	60	55⅓	49	47	160	53	
♂ —— 27.	63	46	65	4	67	53	63	4	64	57⅓	52	22	158	53	
☽ June 21.	65	44	67	39	66	14	67	3	66	40⅙	56	2	164	10	
☉ —— 27.	67	33	73	6	70	32	70	32	70	26	59	56	175	30	
♃ July 1.	69	42	74	39	73	21	71	31	72	18⅔	61	52	181	40	
♄ —— 3.	74	31	75	16	74	3	76	4	74	59⅙	63	42	187	30	
♃ —— 8.	79	46	80	7	79	44	80	37	80	3¾	69	23	194	0	Fine weather.
♂ —— 13.	79	49	79	48	82	9	78	34	80	5⅓	69	26	188	15	
♄ —— 17.	79	7	80	31	79	22	80	30	79	52½	69	56	195	15	
♂ —— 27.	78	6	78	12	77	34	79	9	78	15⅓	67	30	188	37	

1779.	Marked end N. E.		Marked end N. W.		Marked end S. E.		Marked end S. W.		Mean Dip.		Latitude in.		Longitude in.		Remarks.
	°	′	°	′	°	′	°	′	°	′	°	′	°	′	
♄ July 31.	75	53	76	38	76	34	76	2	76	17	65	9 N	189	27 E	Fine weather.
♃ Aug. 12.	67	29	67	54	67	34	68	12	67	47⅔	55	24	171	0	
♂ —— 17.	65	23	66	42	66	2	66	1	66	3⅔	53	50	168	11	
	The foregoing observations were taken on board the Discovery, and the following on board the Resolution.														
☉ Oct. 12.	43	4	63	47	63	34	63	29	63	38⅔	50	55	157	12	
♄ —— 16.	56	6	57	34	58	36	57	36	57	28⅓	45	8	153	40	
♂ —— 26.	49	9	52	57	52	33	53	27	51	34¾	40	4	142	14	
☽ Nov. 1.	46	29	46	43	46	39	46	30	46	35⅓	35	9	141	46	
☉ —— 14.	32	5	31	51	31	48	62	8	31	58	24	50	140	50	
♀ —— 19.	26	10	26	5	26	0	26	5	26	5⅓	22	48	132	40	
♄ —— 27.	23	43	23	35	23	25	23	50	23	38¾	20	35	115	47	
☽ Dec. 13.	27	4	26	55	27	4	27	2	27	0⅔	22	9	113	36	At Macao.
1780.	27	4	26	57	27	1	27	3	27	1⅓					
☽ Jan. 17.	13	33	12	32	12	44	13	57	13	11⅓	12	54	112	0	
♃ —— 20.	2	5	2	2	1	34	3	3	2	11⅓	8	45	107	20	
♃ —— 27.	1	59	2	4	2	3	1	59	2	1	8	40	106	44	At Pulo Condore, N. end dip.
♄ —— 29.	1	34	1	36	1	29	1	32	1	33	7	15	106	0	The S. end dip.
☉ —— 30.	7	5	7	3	7	3	7	0	7	3¾	4	47	104	55	
♂ Feb. 1.	13	8	13	12	13	19	13	23	13	16	1	20 N	105	30	
♃ —— 3.	18	27	18	43	18	46	18	30	18	37	1	24 S	105	30	
♄ —— 5.	21	53	22	30	22	55	23	7	22	36½	3	15	106	9	
♄ —— 12.	25	42	25	51	26	21	26	15	26	2¾	6	5	106	36	At Cracatooa.
♄ —— 19.	30	4	30	30	31	30	29	30	30	23¾	8	17	105	20	
♃ Mar. 2.	47	24	48	28	49	32	46	24	47	57⅔	17	56	87	20	
☿ —— 8.	51	56	52	5	54	1	51	1	52	16⅚	20	4	77	10	
♄ —— 11.	53	44	54	39	55	33	54	30	54	36¼	20	54	71	36	
♃ —— 16.	55	4	57	5	58	16	56	10	56	48½	23	13	60	17	
☽ —— 20.	58	4	59	7	21	8	58	29	58	30⅔	26	36	54	30	
♄ —— 25.	55	54	55	48	56	27	55	44	55	58½	30	20	36	54	
♃ —— 30.	51	28	53	22	55	24	52	15	53	7¼	31	3	33	25	
☽ April 3.	51	0	50	19	52	28	51	17	51	16¼	35	0	23	41	
♃ —— 6.	49	37	49	16	51	30	50	1	50	7¾	35	48	21	40	
♄ —— 22.	46	31	46	47	46	17	46	49	46	46	34	11	18	21	False Bay.
	46	35	46	49	46	58	46	43	46	49					
☽ May 15.	40	56	40	29	41	3	41	2	40	52¾	29	53	10	35	
♃ —— 18.	32	44	32	34	32	50	32	44	32	43½	26	25	3	30	
♀ —— 20.	24	34	25	6	24	37	20	52	24	47¾	23	34	2	16 W	
♃ —— 25.	12	39	12	38	13	1	12	33	12	43⅙	17	52	9	54	
♀ —— 26.	7	6	6	16	6	19	7	19	6	45⅓	16	40	10	58	
☉ —— 28.	6	5	6	3	6	11	6	4	6	6⅙	14	50	13	14	
☽ —— 29.	2	18	2	55	3	15	2	44	2	48½	13	47	14	34	
☉ —— 30.	2	11	1	48	1	34	1	50	1	51	13	33	14	58	

1780.	Marked end S. E.	Marked end S. W.	Marked end N. E.	Marked end N. W.	Mean Dip.	Latitude in.	Longitude in.	Remarks.
	° ′	° ′	° ′	° ′	° ′	° ′	° ′	
♂ May 30.	1 33 S	1 36 S	0 58 N	0 32 N	0 24⅔	12 54 S	15 33 W	The S. end dip.
☿ —— 31.	2 5 N	2 0 N	0 2 S	0 32 S	0 53	12 37	15 52	The N. end dip.
♃ June 1.	2 1	1 52	2 9	1 49	1 58	11 50	16 36	
♀ —— 2.	4 32	4 9	5 52	6 14	5 12	11 15	17 32	
☽ —— 5.	11 48	10 32	11 28	11 11	11 15⅙	8 51	20 41	
♃ —— 8.	21 13	20 17	19 37	20 11	20 19⅔	4 50	23 52	
☉ —— 11.	29 38	28 30	29 32	30 14	29 28¼	1 10 N	26 30	
♄ —— 17.	40 30	39 12	37 28	39 33	39 11	6 26	25 55	
♃ —— 22.	44 11	43 14	42 15	44 4	43 26⅓	9 43	29 2	
☿ —— 28.	50 37	52 16	51 42	51 52	51 37	16 45	34 34	
♂ July 4.	59 26	59 22	59 54	60 8	59 42¾	24 2	39 20	
☉ —— 9.	65 2	65 8	64 45	65 8	65 1⅙	39 33	41 48	
♃ —— 13.	67 25	67 32	67 34	68 14	67 41½	33 17	42 10	
☽ —— 17.	70 33	71 10	70 35	71 34	70 58⅓	36 11	40 50	
♀ —— 21.	69 48	70 2	70 31	70 24	70 11¼	37 51	36 56	
♃ —— 27.	72 32	72 21	72 32	72 35	72 30¼	40 55	34 7	
☉ —— 30.	72 30	73 3	73 5	72 51	72 52¼	43 20	26 50	
♃ Aug. 3.	73 21	73 25	73 24	73 26	73 24⅓	45 8	24 31	
♄ —— 5.	72 14	72 2	72 16	72 12	72 11¼	46 30	19 4	
♀ —— 11.	73 46	74 48	74 32	74 6	74 18⅓	52 28	16 15	
☽ —— 14.	74 42	74 46	74 8	75 40	74 49½	53 34	15 42	
♃ —— 17.	76 12	76 33	77 2	76 47	76 39	56 10	12 41	
☉ —— 20.	76 9	76 26	76 33	76 45	76 28½	58 44	5 22	
♄ —— 26.	74 47	75 11	76 29	76 27	75 44	58 56	3 31	In Strumness at the Orkneys.
	75 45	75 33	76 17	76 24	76 0			

METEOROLOGICAL OBSERVATIONS

MADE ON BOARD

His MAJESTY'S SLOOPS RESOLUTION and DISCOVERY,

DURING THEIR LATE VOYAGE ON DISCOVERIES,

IN THE YEARS 1776, 77, 78, 79, and 80.

TOGETHER WITH

THE LATITUDE AND LONGITUDE OF THE SHIP AT NOON.

BY WILLIAM BAYLY.

1776.	Therm. B. Greatest Height.	Therm. B. Least Height.	At Noon. Marine Barom.	Therm. A.	Therm. B.	Latitude in.	Longitude in.	Winds.	Weather and Remarks.
	°	°		°	°	° ′	° ′		
☉ Aug. 4.	68	62	30,25	67½	64	47 4 N	7 53 W	North.	Light winds and cloudy weath.
☽ —— 5.	66	60	30,19	65½	63½	46 35	8 23	N. by E.	Brisk gales and flying clouds.
♂ —— 6.	66	62	30,24	65½	64	44 35	9 32	N.W. by W.	Brisk gales and do.
☿ —— 7.	67	64	30,36	66	65	43 0	10 20	N. by W.	Gentle gales and fair.
♃ —— 8.	68½	64	30,32	68	67	41 16	11 15	N. N. W.	Brisk gales and fair.
♀ —— 9.	69½	65	30,32	69½	69	39 29	11 37	N. E.	Gentle gales and cloudy.
♄ —— 10.	70	66½	30,26	68½	70	37 56	12 3	Do.	Do.
☉ —— 11.	73½	67	30,29	70	73	36 15	12 55½	Do.	Do. and fair.
☽ —— 12.	71	66½	30,31	71	71	34 55	14 15	N. E. by N.	Do.
♂ —— 13.	72	69	30,32	72	72	33 34	15 47	N. E. by E.	Do. and fair, off Madeira.
☿ —— 14.	75½	69½	30,29	74	75½	33 9	17 10½	N. N. E.	Light winds and fair.
♃ —— 15.	75½	69½	30,30	74	73½	33 13	18 0	N. E.	Do.
♀ —— 16.	73	70	30,33	72½	73	32 43	18 33	Do.	Do.
♄ —— 17.	74	70	30,28	74	73½	31 35	19 12	East.	Gentle breezes and flying clouds
☉ —— 18.	73½	69½	30,15	72½	73	29 56	19 51	Do.	Do.
☽ —— 19.	74	70½	30,12	73	73	28 7	20 0	E. N. E.	Fresh breezes and fair weather.
♂ —— 20.	76	72	30,08	75	74½	25 55	21 1	N. N. E.	Do.
☿ —— 21.	78	73½	30,06	76	78	23 39	21 13	Do.	Do.
♃ —— 22.	78	74½	30,07	77	78	21 57	22 16	N. E. by E.	Light breezes and hazy.
♀ —— 23.	77	74	30,07	76	77	20 49	22 44	N. E.	Do.
♄ —— 24.	78	75	30,07	77	78	19 21	23 33	N. E. by N.	Do.
☉ —— 25.	80	76	30,07	78	80	18 0	23 53	N. E.	Little wind and hazy.
☽ —— 26.	80	75	30,16	80	77	16 57	23 50	S. S. E.	Light winds with rain.
♂ —— 27.	80	77	30,14	80	80	16 9	23 40	N. N. W.	Do. and fair weather.
☿ —— 28.	80	78	30,04	79	80	14 20	23 28	North.	Brisk breezes and fair weather.
♃ —— 29.	85	73½	30,03	83	82	12 32	23 22	East.	Gentle breezes and fair weather.
♀ —— 30.	82	79½	30,03	82	81½	11 17	23 37	N. by E.	Do. and hazy.
♄ —— 31.	81	77	30,07	81	80	10 29	23 12	W. S. W.	Fresh gales with thund. lightn. [and rain.
☉ Sept. 1.	79	75½	30,07	77	78	9 17	22 28	W. by S.	Do. with heavy rain.
☽ —— 2.	80	74	30,08	79	78	8 11	21 44	W. S. W.	Gentle breezes and fair.
♂ —— 3.	80	76	30,07	79	76	8 0	20 47	S. W.	Do. and showers of rain.
☿ —— 4.	80	77	30,07	80	79	7 25	19 26	Do.	Do. and hazy weather.
♃ —— 5.	80	77	30,05	80	79	6 31	18 30	Do.	Do.
♀ —— 6.	80	77	30,08	80	79	5 26	17 0	S.W. by W.	Brisk winds with flying clouds.
♄ —— 7.	79½	77	30,07	79½	78	4 49	15 35	S. S. W.	Do.
☉ —— 8.	79½	77	30,07	79	78	4 23	13 45	Variable.	Do.
☽ —— 9.	80	76½	30,08	80	79½	3 47	12 28	Do.	Gentle breezes and cloudy at times.
♂ —— 10.	80½	77	30,03	80	79½	3 22	12 25	S. by E.	Do.
☿ —— 11.	79½	77	30,08	79½	79	2 42	13 24	Do.	Light winds and cloudy weath.
♃ —— 12.	79½	75½	30,10	79½	78	2 11	13 34	South.	Do. and fair.
♀ —— 13.	79	76½	30,07	79	78	1 55	12 31	Do.	Do.
♄ —— 14.	79½	76	30,05	79	78½	1 42	11 28	Do.	Brisk breezes and fair weather.
☉ —— 15.	79½	76	30,07	79	78½	1 12	12 17	S. by E.	Do. and squally.
☽ —— 16.	79	76	30,05	79	77	0 31½	13 7	South.	Gentle breezes and fair weather.

1777.	Therm. B. Greatest Height.	Therm. B. Least Height.	At Noon. Marine Barom.	Therm. A.	Therm. B.	Latitude in.	Longitude in.	Winds.	Weather and Remarks.
	°	°		°	°	° ′	° ′		
♂ Sept. 17.	79	75	30,09	79	76	0 12 S	13 45 W	S. by E.	Gentle breezes and fair weather.
☿ —— 18.	77½	73½	30,10	77½	75½	0 50	14 30	Do.	Do.
♃ —— 19.	77	74	30,10	72½	75½	1 37	15 38	S. S. E.	Do.
♀ —— 20.	77½	74	30,10	77½	76	2 37	17 3	Do.	Fresh gales and flying clouds.
♄ —— 21.	77	74	30,11	77	76	3 39	18 24	S. E. by E	Do. and fair weather.
☉ —— 22.	78	74½	30,12	78	77½	5 16	19 16	S. E.	Do. do.
☽ —— 23.	77½	74	30,14	77½	74½	6 47	20 18	S. E. by S.	Gentle breezes and flying clouds.
♂ —— 24.	77	72	30,10	77	76½	8 17	21 19	S. E.	Do.
☿ —— 25.	77	73½	30,10	77	76½	9 51	21 39	E. S. E.	Do. and fair.
♃ —— 26.	77	74	30,09	77	76½	11 26	22 9	S. S. E.	Do. and do.
♀ —— 27.	76	73	30,07	75	75½	13 10	23 7	S. E. by E.	Do.
♄ —— 28.	75½	70	30,11	71	75½	15 12½	23 25	Do.	Strong gales and squally.
☉ —— 29.	73	71	30,30	73	72	17 12	23 52	S. E.	Gentle gales and fair.
☽ —— 30.	75	69	30,25	73	73	18 56	24 18	E. S. E.	Do.
♂ Oct. 1.	73	68	30,25	73	73	20 10	24 28	East.	Do.
☿ —— 2.	74	68	30,16	74	73	20 54	24 0	E. by N.	Light winds and fair weather.
♃ —— 3.	73½	68	30,16	73½	72½	21 22	24 8	E. N. E.	Do. and fair.
♀ —— 4.	74	68	30,17	74	72	22 3	24 40	E. S. E.	Do. and hazy.
♄ —— 5.	72	67½	30,17	72	71	23 19	24 19	E. N. E.	Gentle breezes and hazy.
☉ —— 6.	73	67½	30,18	73	71	24 42	23 54	E. S. E.	Light winds and fair.
☽ —— 7.	73	68	30,27	73	71	26 13	23 24	Do.	Do.
♂ —— 8.	73	67	30,27	73	71½	27 54	21 46	N. E.	Fresh breezes and fair.
☿ —— 9.	70	67	30,29	69	67	28 51	20 54	Variable.	Do. with much rain at times.
♃ —— 10.	69	64	30,26	69	67	29 42	20 29	E. by N.	Light winds and cloudy.
♀ —— 11.	69	62½	30,26	67	65	28 52	19 52	S. S. E.	Do. and fair.
♄ —— 12.	67	61	30,23	65	65	28 47	19 14	N. N. W.	Do.
☉ —— 13.	67½	65	30,05	66½	67½	30 24	17 33	W. by N.	Brisk gales and cloudy.
☽ —— 14.	65	59½	30,26	64	62	30 26	15 23	S. by E.	Gentle breezes and flying clouds.
♂ —— 15.	63½	58	30,18	63½	63½	30 26	14 32	North.	Do.
☿ —— 16.	66	59	30,08	66	60½	31 42	12 13	S. by W.	Brisk gales and small rain.
♃ —— 17.	64	58½	30,20	64	62	31 55	11 17	N. E.	Light winds and hazy weather.
♀ —— 18.	64½	60	30,10	64	64½	32 52	9 6	N. W.	Fresh breezes and do.
♄ —— 19.	64	61	29,88	64	64	33 29	5 35	North.	Strong gales and do.
☉ —— 20.	60	54	30,10	59	55	33 42	2 30	S. S. W.	Light winds and fair.
☽ —— 21.	59	53	30,15	57	57	33 40	1 0	Variable.	Do.
♂ —— 22.	59	55	30,20	59	57	33 42	1 0 E	Do.	Light winds and rain at times.
☿ —— 23.	58	54	30,44	57	54½	33 26	2 50	S. E.	Light winds and fair weather.
♃ —— 24.	60½	54	30,44	60½	60	33 36	3 10	N. E. by E.	Do.
♀ —— 25.	61	55	30,40	61	60	34 7½	3 57	N. by E.	Gentle breezes and fair.
♄ —— 26.	62½	57	30,18	61	62	34 9¾	6 45	N. W.	Do. weather.
☉ —— 27.	63½	58	30,13	63½	61½	34 1¾	8 55	N. N. W.	Do. and hazy.
☽ —— 28.	64½	59	30,01	64	64	33 59	10 52	West.	Do.
♂ —— 29.	60	56	30,20	60	58	33 44¾	13 56	South.	Gentle gales and hazy weather.
☿ —— 30.	62	58	30,10	62	59	32 50	16 7	Do.	Strong gales and do.

1776.	Therm. B. Greatest Height.	Therm. B. Least Height.	At Noon. Marine Barom.	Therm. A.	Therm. E.	Latitude in.	Longitude in.	Winds.	Weather and Remarks.
	°	°		°	°	° ′	° ′		
♃ Oct. 31.	65	60	30,12	65	62½	32 36½ S	17 0 W	S. S. W.	Moderate and very hazy.
♀ Nov. 1.	66½	62	30,10	66	64½	33 2	16 37½	S. S. E.	Strong gales and fair weather.
♄ —— 2.	64	60	30,19	64	62½	33 40	14 38	S. by E.	Do. and hazy.
☉ —— 3.	65	61	30,08	63½	64½	32 52½	15 32	Do.	Do. and fine weather.
☽ —— 4.	66	61	30,00	66	62	33 4	15 17	South.	Light breezes and fair. [times.
♂ —— 5.	67	61	30,07	67½	64½	33 14	15 10	S. by E.	Fresh breezes and small rain at
☿ —— 6.	68	62	30,10	68	64	34 27	14 31	S. E.	Mod. breezes and fair weather.
♃ —— 7.	68	62	29,90	68	66	34 14	15 28	S. S. E.	Do. and hazy.
♀ —— 8.	67	63	30,07	67	64½	34 27	16 46	S. W.	Do. and fair.
♄ —— 9.	66	61	30,17	66	62½	34 0		S. by E.	Do. and do.
☉ —— 10.	69	63	30,05	67	66	In Table Bay.		South.	Gentle breezes and fair weath.
☽ —— 11.	73	64	30,09	71	73			N. W.	Do. and do.
♂ —— 12.	76½	66	30,07	76	77			Do.	Rain in morn. fair in the aftern.
☿ —— 13.	79	68	30,14	78	77			West.	Do. and do.
♃ —— 14.	77½	65	30,13	76	66			S. S. E.	Gentle breezes and fair.
♀ —— 15.	76	64	30,25	74	65			West.	Light winds and cloudy weath.
♄ —— 16.	80	64½	30,04	79	66	On shore at the Cape Town.		E. N. E.	Do. and flying clouds.
☉ —— 17.	79½	63	30,13	79	68			North.	Do. and fair weather.
☽ —— 18.	84	68	30,10	83	69½			N. W.	Gentle gales and flying clouds.
♂ —— 19.	76	63	30,00	72	64			S. E.	Strong gales and fair.
☿ —— 20.	80½	70	29,96	80	72			West.	Light winds and fair.
♃ —— 21.	79	67	29,84	75	68			N. by W.	Do. and cloudy.
♀ —— 22.	78	65	29,88	76	67			N. W.	Do. and fair.
♄ —— 23.	77½	65½	29,90	76	67			West.	Do. and cloudy.
☉ —— 24.	78	75	30,10	77	67½			N. E.	Light airs and fair.
☽ —— 25.	77½	74	30,11	76	68			Do.	Brisk breezes and fair.
♂ —— 26.	73	69	30,21	71	70			N. N. E.	Do. and do.
☿ —— 27.	71½	63	30,22	70	65	On board in the Bay.		E. N. E.	Do. and do.
♃ —— 28.	69	62	30,10	68	63			S. W.	Strong breezes and cloudy.
♀ —— 29.	71	66	29,96	69	67			S. E.	Do. and fair.
♄ —— 30.	68	65	29,88	68	67			N. E.	Light winds and fair.
☉ Dec. 1.	69	66	29,92	68	69			N. N. W.	Do. and hazy.
☽ —— 2.	75	68	30,05	75	69½	At Sea. 33 53 S	17 29 E	West.	Moderate and fair. [rain.
♂ —— 3.	75	59	29,88	75	64½	34 39⅓	18 26	W. S. W.	Brisk gales and clo. with small
☿ —— 4.	66	59	29,55	66	60	37 8	19 7	W. N. W.	Do. and cloudy.
♃ —— 5.	63	57	29,46	62	58	38 43½	21 29	Do.	Strong gales and squally weath.
♀ —— 6.	63	55	29,44	63	62	39 0	23 23	N. E. by N.	Moderate and cloudy.
♄ —— 7.	61	51	29,50	57½	61	39 51	25 20	S.W. by W.	Fresh gales and cloudy.
☉ —— 8.	57	46½	29,65	55	46	40 57½	27 34	Do.	Strong gales and squally.
☽ —— 9.	56½	48½	29,82	56½	52	42 18	30 18	N. W.	Fresh gales and cloudy.
♂ —— 10.	58	46	29,44	57	50½	43 58½	32 16	N.W. by N.	Moderate breezes with rain.
☿ —— 11.	54	41	29,23	53	41	45 37	34 31	South.	Fresh breezes and thick hazy w.
♃ —— 12.	52	35½	29,60	52	37	46 20	37 3	W. by S.	Do. gales & squally with hail & snow.
♀ —— 13.	50	37	29,90	41	37	47 15	40 36	W. N. W.	Do. and do.

1776.	Therm. B. Greatest Height.	Therm. B. Least Height.	At Noon. Marine Barom.	Therm. A.	Therm. B.	Latitude in.	Longitude in.	Winds.	Weather and Remarks.
	°	°		°	°	° ′	° ′		
♄ Dec. 14.	43½	37½	30,00	40	43	47 47 S	43 52 E	N. N. W.	Moderate breezes and fair.
☉ —— 15.	45½	41	29,90	45	43	48 26	47 53	North.	Fresh gales and hazy weather.
☽ —— 16.	46	40	29,70	46	42	48 56	51 38	N. N. E.	Do. Do. with much rain.
♂ —— 17.	49	38½	29,96	46	42	48 28	54 56	N. N W.	Gentle breezes and hazy weat.
☿ —— 18.	49	39½	30,00	49	41	48 37	56 26	S. S. W.	Light breezes and hazy.
♃ —— 19.	46	39½	29,94	46	44	48 29	59 0	N. W.	Do. and foggy weather.
♀ —— 20.	46	42	29,91	46	44	48 30½	62 7	Do.	Fresh breezes and hazy weath.
♄ —— 21.	47	41	29,96	45½	44	48 27	64 54	North.	Fresh gales and very foggy we.
☉ —— 22.	47½	38	30,04	47	38	48 27	65 28	South.	Light breezes and rainy weath.
☽ —— 23.	47½	36	29,64	47½	44	48 58	66 35	N. by E.	Fresh gales and much rain.
♂ —— 24.	46	39	29,77	45	39	48 21	68 34	W. N. W.	Do. and hazy with small rain.
☿ —— 25.	48	40	30,10	48	40	In Christmas Bay.		N. W.	Fresh gales and hazy weather.
♃ —— 26.	51	40	29,95	47	40	48 41	69 0	Variable.	Light winds and rain.
♀ —— 27.	58	43	29,77	58	43			W. N W.	Strong gales with thick fog and rain.
♄ —— 28.	56	38	30,06	57	41			N. W.	Gentle breezes and fair.
☉ —— 29.	54	40	29,72	52	40½	48 51	69 40	N. N. W.	Do. and fair weather.
☽ —— 30.	53	34½	29,52	51	41	49 1	71 4	N. W.	Fresh gales and flying clouds.
♂ —— 31.	54	37	29,63	48	41	49 7½	73 0	N.W.byW.	Do.
1777.									
☿ Jan. 1.	45	38	30,10	43	39	48 30	77 30	S.W. by W.	Do. and squally.
♃ —— 2.	44	38	30,22	44	42	48 19	80 33	W. N. W.	Moderate breezes and hazy w.
♀ —— 3.	48	41½	30,18	48	41½	48 16	84 0	N. N. W.	Do. and fair weather.
♄ —— 4.	51	42	30,00	51	48	48 26	88 28	W. N. W.	Moderate breezes and hazy.
☉ —— 5.	54	46	29,90	54	47½	48 26	90 53	N. by W.	Do. and foggy weather.
☽ —— 6.	50	45	29,77	49	45	48 16	93 16	S. S. E.	Light winds and small rain.
♂ —— 7.	54	44	29,72	54	45	48 12	94 41	N. E. by N.	Light winds and very hazy we.
☿ —— 8.	53	45	29,92	53	46½	48 19	98 14	North.	Fresh gales and foggy.
♃ —— 9.	53	42	29,84	52	47	48 20	103 7	N. E.	Moderate and do.
♀ —— 10.	54	45	29,76	52	46½	48 23½	106 37	N. N. E.	Do. and hazy weather.
♄ —— 11.	53	46	29,77	53	47	48 12	109 33	N. E. by N.	Do.
☉ —— 12.	54	44½	29,67	54	47½	48 29	111 0	N. by W.	Light winds and thick foggy w.
☽ —— 13.	56	45	29,26	56	47	48 0	112 45	S. by E.	Do. with fog and rain.
♂ —— 14.	55	44½	29,31	53	48	47 17	116 31	N. N. W.	Fresh breezes and fair weather.
☿ —— 15.	51	45	29,44	51	49	46 22	120 28	W. by S.	Strong gales and flying clouds.
♃ —— 16.	56	51½	29,75	55½	53	45 11	124 22	N. by W.	Do. and squally weather.
♀ —— 17.	57	52½	29,94	57	57	44 16	128 0	N. by E.	Moderate and hazy weather.
♄ —— 18.	57	53	29,51	57	55	44 20	131 30	North.	Do.
☉ —— 19.	57	51	29,52	56½	55	43 50	134 24	N.W. by N.	Fresh gales and fair weather.
☽ —— 20.	58½	58	29,44	58	55½	43 32	137 56	N. W.	Strong gales and flying clouds.
♂ —— 21.	57	53	29,95	57	57	43 20	141 15	West.	Moderate and fair weather.
☿ —— 22.	60½	53	30,13	60	57½	43 28	143 1	W. N. W.	Light winds and hazy weather.
♃ —— 23.	61½	55	30,08	61	58	43 41½	144 36	W. by S.	Do. and small rain at times.
♀ —— 14.	60	52	30,30	59	56½	43 46	147 0	S. by W.	Do. and fair weather.
♄ —— 25.	62	52	30,29	62	61	43 42		S. W.	Do.

1777.	Therm. B. Greatest Height.	Therm. B. Least Height.	At Noon. Marine Barom.	Therm. A.	Therm. B.	Latitude in.	Longitude in.	Winds.	Weather and Remarks.
	°	°		°	°	° ′	° ′		
☉ Jan. 26.	63	53	30,15	63	62	In the mouth of Adventure Bay.		S. S. E.	Light winds and fair.
☽ —— 27.	69	55	30,12	68	70			E. by N.	Do.
♂ —— 28.	73	64	30,16	70	73			Do.	Do.
☿ —— 29.	73½	63	30,14	70	73½	43 20S	147 36 E	E. N. E.	Do.
♃ —— 30.	69½	63	30,12	69	60	43 31½	149 24	S. S. W.	Fresh gales and fair weather.
♀ —— 31.	67	57	30,20	64½	61			N. N. E.	Moderate and a little hazy.
♄ Feb. 1.	66	59	30,14	65	63	44 14½	150 41	N. by E.	Do.
☉ —— 2.	64	59	30,00	64	61½	44 40	154 42	North.	Fresh breezes and foggy.
☽ —— 3.	64	60	30,06	64	63	44 42	157 28	N. by W.	Do. and a little hazy.
♂ —— 4.	68	58	30,14	65	68	43 55	159 32	South.	Moderate breezes and rain.
☿ —— 5.	61	54½	30,06	60½	59	43 31	161 50	S. E. by E.	Do. and fair.
♃ —— 6.	62½	58	30,00	62	61½	42 54	163 28	W. S. W.	Light breezes with rain.
♀ —— 7.	64	58	30,00	62½	64	42 25	164 24	West.	Do. and fair.
♄ —— 8.	66½	62	29,94	66½	65½	41 53	166 38	N.W. by N.	Gentle breezes and fair.
☉ —— 9.	65	60	30,01	62½	65	40 59	169 30	S. S. W.	Do. and hazy.
☽ —— 10.	66	63	30,22	66	64	40 33	171 17	S. S. E.	Do. and fair.
♂ —— 11.	65	60½	30,24	63	64	40 27¾	173 2	West.	Do.
☿ —— 12.	65½	60	30,00	65½	63	In Charlotte Sound		W. N. W.	Fresh gales and fair.
♃ —— 13.	66	60½	30,01	66	64			N. W.	Do.
♀ —— 14.	65	59½	29,89	64	62			South.	Gentle gales and fair.
♄ —— 15.	73	66	30,16	69	73			N. W.	Squally with rain.
☉ —— 16.	71	67	29,61	70	71			S. S. W.	Do.
☽ —— 17.	72	64	29,70	70½	71½			Do.	Do.
♂ —— 18.	60	54½	29,81	59	59½			West.	Moderate and clear weather.
☿ —— 19.	60	53	29,90	58	53			N. E.	Do.
♃ —— 20.	60	54	29,60	59	59½			N. W.	Heavy squalls and rain.
♀ —— 21.	67	56	30,03	64	67			West.	Moderate and clear.
♄ —— 22.	70½	62	30,29	70	69			N. N. E.	Do.
☉ —— 23.	68	62	30,11	66	68			S. W.	Light winds and hazy.
☽ —— 24.	63	58	30,23	62	60			S. S. E.	Light winds with small rain.
♂ —— 25.	63	59	30,10	60	62	41 07	174 20	North.	Do. and fair.
☿ —— 26.	63	55½	30,00	62	58	41 36	174 46	N. E.	Gentle breezes and fair.
♃ —— 27.	65	58	30,04	65	59	41 40	176 17	S. E.	Do. and cloudy.
♀ —— 28.	64	57	30,11	64	60	41 19	176 56	East.	Light winds and hazy.
♄ March 1.	64	59	29,90	64	60	41 56	178 35	N. E. by E.	Fresh breezes and thick rain.
☉ —— 2.	66	57	29,95	63	66	42 31½	180 3	North.	Do. and fair.
☽ —— 3.	64½	58	29,57	64½	58½	42 10	182 24	N. W. by N.	Do. and cloudy with rain.
♂ —— 4.	61	56	29,61	60	59½	41 24	185 14	S. S. W.	Strong gales and flying clouds.
☿ —— 5.	63½	58	29,91	60	63½	39 52¾	187 38	S. W.	Gentle breezes and fair.
♃ —— 6.	66	59¼	29,86	64	65½	39 07¾	189 28	N. by W.	Fresh breezes and fair.
♀ —— 7.	67	63	30,00	67	66½	39 16	191 14	N. by E.	Moderate and do.
♄ —— 8.	68	64	30,20	68	66½	39 24	192 44	North.	Do.
☉ —— 9.	68	63	30,25	68	66	39 28½	193 34	N. by W.	Moderate and hazy.
☽ —— 10.	69	63½	30,30	69	67	39 22	195 27	North.	Light breezes and fair.

1777.	Therm. B. Greatest Height.	Therm. B. Least Height.	At Noon. Marine Barom.	Therm. A.	Therm. B.	Latitude in.	Longitude in.	Winds.	Weather and Remarks.
	°	°		°	°	° ′	° ′		
♂ Mar. 11.	68½	63	30,34	68½	66½	39 28 S	196 23 E	N. by E.	Light breezes and fair weather.
☿ —— 12.	69	63	30,19	69	65½	39 4½	196 34	E. S. E.	Do. and cloudy.
♃ —— 13.	67½	63	30,07	67½	63½	37 25	198 10	Do.	Fresh breezes and hazy.
♀ —— 14.	69	64	30,14	69	66	35 44	199 35	East.	Strong breezes and hazy with rain.
♄ —— 15.	72½	65	30,23	72	69½	34 6¾	198 52	E. by N.	Light winds and clear.
☉ —— 16.	72½	68	30,04	72	72	33 38½	199 0	S. E.	Do. and hazy.
☽ —— 17.	74½	68½	30,12	74½	70	33 25¾	198 51	Variable.	Do. [of rain.
♂ —— 18.	72½	67	30,35	72½	69	32 3	199 44	E. S. E.	Moderate breezes with squalls
☿ —— 19.	73½	68	30,27	73½	72	30 30	200 46½	East.	Do. with rain at times.
♃ —— 20.	74	70	30,16	74	73½	29 3	200 42	Do.	Moderate breezes and hazy.
♀ —— 21.	74½	71	30,11	74½	68	27 48	200 54	Do.	Do. and fair.
♄ —— 22.	76	72	30,02	76	75	26 48	201 34	Do.	Light breezes and fair.
☉ —— 23.	78	73	30,03	77	78	26 1½	201 33	E. by N.	Do.
☽ —— 24.	79	75	30,15	79	78	25 23	201 11	N. E.	Do.
♂ —— 25.	79½	77	30,20	79½	79	24 30	201 0	N. E. by E.	Do.
☿ —— 26.	80½	77	30,15	80	80½	23 39	201 12	E. by S.	Do.
♃ —— 27.	82	77	30,05	81	82	23 15½	201 11	N. E. by E.	Light airs and fair.
♀ —— 28.	83	79	30,07	82	83	22 46	200 54	N. by E.	Light breezes and cloudy.
♄ —— 29.	81	79	30,10	81	79½	22 16¼	201 25	S. E. by S.	Do. and fair.
☉ —— 30.	81½	78	30,05	81	80	21 52	202 5	E. N. E.	Gentle breezes and flying clouds
☽ —— 31.	82	80	30,04	81½	81	20 23	201 32	Do.	Do.
♂ April 1.	83	80½	30,01	82½	83	19 50½	201 32	Do.	Mod. breezes and flying clouds.
☿ —— 2.	84½	80	30,03	83½	84½	20 1¾	201 39	E. by N.	Do.
♃ —— 3.	84	80	30,04	83	84	20 1½	201 49	E. N. E.	Light airs and fair.
♀ —— 4.	83	80	30,01	83	83	19 49¾	201 32	Do.	Light airs and cloudy.
♄ —— 5.	83	81	30,06	83	82½	19 20	201 23	Do.	Do.
☉ —— 6.	84½	80½	30,08	84	83	19 13½	201 2	E. by S.	Do.
☽ —— 7.	84	81	30,06	83	83	19 27	199 50	E. S. E.	Moderate breezes and fair.
♂ —— 8.	84	80	30,00	82	84	19 8	199 20	S. E.	Light breezes and fair.
☿ —— 9.	83	80	29,98	83	83	18 57	198 51	Variable.	Do. [light'ning, & rain.
♃ —— 10.	84½	80½	29,90	84½	81½	18 38	197 58	N. by W.	Moderate breezes and thunder,
♀ —— 11.	84	75	30,07	84	80½	18 20½	197 13	N. by E.	Do. and cloudy. [showers.
♄ —— 12.	84	79	30,00	83½	84	18 7½	197 1	Variable.	Variable winds with thunder
☉ —— 13.	82½	75	30,05	82½	80	18 8	196 36	North.	Do.
☽ —— 14.	82	77	30,04	81½	80	18 9½	196 30	S. E.	Light winds and hazy.
♂ —— 15.	83½	80	30,04	83	83½	18 9½	196 30	Do.	Do. and fine weather.
☿ —— 16.	83½	80	30,03	83½	83½	18 6½	196 30	E. N. E.	Gentle breezes and hazy.
♃ —— 17.	85	81	30,03	84	85	18 1	196 30	N. N. E.	Light breezes and fair.
♀ —— 18.	84	81	30,04	84	84	18 9¾	196 3	N. by W.	Do.
♄ —— 19.	83	81½	29,97	83	82	17 56	194 40	N. N. W.	Moderate breezes with squalls.
☉ —— 20.	83	77	30,02	83	82	18 7½	193 36	N. by W.	Do. and hazy. [much rain.
☽ —— 21.	82	77	29,96	82	79	18 46	192 16	W. N. W.	Strong gales and squally with
♂ —— 22.	81½	75	30,00	81	80	18 41	191 47	N. N. E.	Light breezes and cloudy.
☿ —— 23.	81½	77	30,06	81	79	19 0	190 20	East.	Brisk gales and much rain.

1777.	Therm. B. Greatest Height.	Therm. B. Least Height.	At Noon. Marine Barom.	At Noon. Therm. A.	At Noon. Therm. B.	At Noon. Latitude in.	At Noon. Longitude in.	Winds.	Weather and Remarks.
	°	°		°	°	° ′	° ′		
♃ April 24.	80½	76½	29,94	80½	79½	19 15 S	190 0 E	S. by E.	Moderate and rainy weather.
♀ —— 25.	79½	75	29,96	79½	79	19 33	188 56	E. S. E.	Light breezes and much rain.
♄ —— 26.	79	74	29,98	79	75	19 57	187 47	N. E.	Do.
☉ —— 27.	80½	75½	30,00	80½	77½	20 36¾	185 50	S. S. E.	Moderate breezes and fair.
☽ —— 28.	82	77	30,03	82	81½	20 26¾	184 58	N. by W.	Do.
♂ —— 29.	82	76	30,00	81½	74½			S. S. W.	Light winds and very thick rain.
☿ —— 30.	81½	77	30,05	81	78			N. E.	Do. with squalls of rain.
♃ May 1.	81½	74	30,04	81	79½			E. N. E.	Do. and cloudy.
♀ —— 2.	82	78	30,04	81	78			Do.	Fresh gales and squally.
♄ —— 3.	83	77½	30,05	82	79			N. E.	Light winds and cloudy.
☉ —— 4.	82½	80	30,21	82	78			Variable.	Moderate and fair.
☽ —— 5.	82	78	30,07	81½	77			Do.	Light winds and cloudy.
♂ —— 6.	83	75	30,16	83	76	At Annamocka.		E. by S.	Do. and fair.
☿ —— 7.	82	74	30,17	81½	77	20 15	185 0	East.	Do. and do.
♃ —— 8.	83	75	30,08	82	77			S. S. W.	Do. and flying clouds.
♀ —— 9.	82½	74	30,00	82	78			S. E.	Moderate and flying clouds.
♄ —— 10.	81	74	30,00	80	79			Do.	Fresh breezes and squally.
☉ —— 11.	82	75	30,02	81	79			S. S. E.	Do. and flying clouds.
☽ —— 12.	82½	77	29,78	77½	78			S. by E.	Moderate and flying clouds.
♂ —— 13.	80	76	30,02	78	79			S. E.	Light breezes and fine weath.
☿ —— 14.	79½	74	30,04	77	78			S. by E.	Do.
♃ —— 15.	77½	75	30,06	77½	77	19 51	184 53	S. E.	Do. and hazy weather.
♀ —— 16.	79	77	30,08	78	79	19 40	185 3	Do.	Do.
♄ —— 17.	81	75	30,12	80	81			S. E. by E.	Brisk breezes and fair.
☉ —— 18.	81½	72	30,15	80	81½			S. E.	Light breezes and do.
☽ —— 19.	82	69	30,10	81	82			N. E.	Do.
♂ —— 20.	83	70	30,03	82	83			Do.	Little wind and fair.
☿ —— 21.	82	69	30,04	81	81	At the Islands of		West.	Fresh breezes and squally.
♃ —— 22.	81	70	30,05	80	79½	Apie.		W. S. W.	Gentle breezes and fair.
♀ —— 23.	79	70½	30,07	78	79	19 46	185 29	S. W.	Do.
♄ —— 24.	82	77½	30,06	80	82			N. E.	Gentle breezes and fine.
☉ —— 25.	82	77½	30,10	80½	82			S. S. W.	Light winds and fair.
☽ —— 26.	81	78	30,07	80	81			S. E.	Do.
♂ —— 27.	80	77	30,12	77½	80			E. S. E.	Brisk breezes and cloudy.
☿ —— 28.	81	77½	30,02	81	80			S. E.	Brisk breezes and cloudy with small r.
♃ —— 29.	82	78	30,04	81½	82	19 44	185 21	East.	Light breezes and fair.
♀ —— 30.	78	76	30,21	77½	76	19 50	185 10	Variable.	Brisk gales and fair.
♄ —— 31.	76	73	30,34	76	74	20 0	184 40	S. E. by E.	Fresh breezes and cloudy.
☉ June 1.	74	73	30,06	76	73	19 53	185 1½	E. S. E.	Fresh gales and rain.
☽ —— 2.	76	72	30,05	75	76	19 53	185 1½	S. E.	Gentle breezes and fair.
♂ —— 3.	77	73	30,14	76	77	19 53	185 1½	S. E. by E.	Do.
☿ —— 4.	77	73½	30,11	77	77	20 2	184 50	Do.	Brisk breezes and fair.
♃ —— 5.	77	73	30,10	70½	77½			Do.	Fresh breezes and flying clouds.
♀ —— 6.	77	73	30,11	77	76	At Annamocka.		Do.	Do. and fair weather.

1777.	Therm. B. Greatest Height.	Therm. B. Least Height	At Noon. Marine Barom.	Therm. A.	Therm. B.	Latitude in.	Longitude in.	Winds.	Weather and Remarks.
	°	°		°	°	° ′	° ′		
♄ June 7.	78	74	30,12	77	78	At Annamocka.		N. E.	Fresh breezes and fair weather.
☉ —— 8.	79	73	30,12	77	79	20 20 S	184 54 E	N. E. by E.	Light breezes and do.
☽ —— 9.	78	74	30,10	77	78			E. S. E.	Do.
♂ —— 10.	78	74½	30,12	78	77			S. W.	Light winds and hazy weather.
☿ —— 11.	76	72½	30,05	75½	76			S. by E. ½ E.	Moderate breezes and fair.
♃ —— 12.	79	73	30,04	75	79			N. N. E.	Light breezes and do.
♀ —— 13.	80	74	30,07	76	80			N. E.	Do. and cloudy.
♄ —— 14.	80½	74	30,06	76	80½			S. E.	Moderate and fine weather.
☉ —— 15.	79	73½	30,12	73	79			Do.	Do.
☽ —— 16.	76	72½	30,15	73	76			Do.	Do.
♂ —— 17.	81	73	30,20	75	81			Do.	Fresh breezes and fair.
☿ —— 18.	85	74	30,24	75	85			Do.	Do. and cloudy.
♃ —— 19.	80	73	30,15	78	80			S. S. E.	Do.
♀ —— 20.	80½	72	30,24	78	80½			Do.	Do. and fine weather.
♄ —— 21.	85	73	30,20	78	85	At Tongotaboo.		East.	Do.
☉ —— 22.	81	72½	30,18	76	81	21 8⅓	184 45	E. by N.	Do. and cloudy.
☽ —— 23.	81	73	30,10	78	81			E. N. E.	Moderate and flying clouds.
♂ —— 24.	81	74	30,09	78	81			E. S. E.	Do. and fair.
☿ —— 25.	77	72	30,13	73	76			S. E.	Fresh breezes and cloudy.
♃ —— 26.	80	71½	30,17	74	80			Do.	Do.
♀ —— 27.	80	72	30,20	74½	80			E. by S.	Do.
♄ —— 28.	80	73	30,11	74	80			Do.	Light winds and fine.
☉ —— 29.	80	71½	30,09	75	80			S. E.	Moderate and cloudy.
☽ —— 30.	84	72½	30,18	81	84			N. N. E.	Do. and flying clouds.
♂ July 1.	88	74	30,25	83	88			North.	Fresh breezes and heavy showers of r.
☿ —— 2.	82	73	30,12	79	80			Variable.	Light winds and heavy r. at times.
♃ —— 3.	77	71	30,16	75	77			Do.	Fresh breezes and do.
♀ —— 4.	76	70	30,12	76	73½			E. S. E.	Do. and cloudy.
♄ —— 5.	73	69	30,20	72	72			S. S. E.	Mod. breezes and small rain.
☉ —— 6.	71	67	30,20	71	70			S. E. by S.	Fresh breezes and cloudy weat.
☽ —— 7.	71	66	30,14	70	68			Do.	Do.
♂ —— 8.	72	65	30,16	70	69			Do.	Gentle breezes and flying clouds
☿ —— 9.	71	67	30,24	70	71			S. E.	Light breezes and fine weather.
♃ —— 10.	72	67½	30,14	71½	70			S. E. by E.	Do.
♀ —— 11.	72	68	30,16	72	72			East.	Mod. breezes and fine weather.
♄ —— 12.	74	70	30,17	73½	74			E. S. E.	Do.
☉ —— 13.	73	69	30,11	72	73	At Middleburgh.		E. N. E.	Moderate and fine weather.
☽ —— 14.	74	70	30,08	74	72			N. E.	Fresh breezes and rain.
♂ —— 15.	77	68	30,00	77	74			North.	Do. and small rain.
[illegible] —— [illegible]	[illegible]	69	30,11	76	77			N. E.	Light winds and rain.
♃ —— 17.	78	68	30,11	77	78			S. E.	Do. and cloudy weather.
♀ —— 18.	77	72	30,00	77	72	22 4½	185 20	E. S. E.	Moderate and cloudy with rain.
[illegible] —— 19.	71	68	30,30	73	70½	22 28¾	186 0	S. by E.	Do. and fair.
[illegible] —— [illegible]	[illegible]	69	30,16	71	72	22 28	186 29	S. E.	Moderate and fair.

1777.	Therm. B. Greatest Height.	Therm. B. Least Height.	At Noon. Marine Barom.	At Noon. Therm. A.	At Noon. Therm. B.	At Noon. Latitude in.	At Noon. Longitude in.	Winds.	Weather and Remarks.
	°	°		°	°	° ′	° ′		
☽ July 21.	72½	70	30,14	72½	71½	22 59 S	186 52 E	E. N. E.	Moderate and fair weather.
♂ —— 22.	73½	70	30,16	73½	72	24 4	187 42	N. N. by E.	Do. and cloudy.
☿ —— 23.	74	70	30,14	74	72½	24 50	189 29	N. E. E.	Brisk winds and hazy.
♃ —— 24.	74	70½	30,10	74	72	25 23	191 1	N. by E.	Moderate and cloudy.
♀ —— 25.	75	70	30,15	75	72½	25 46	192 17	North.	Do. and hazy weather.
♄ —— 26.	74	70½	30,17	74	72	26 7	193 43	Do.	Do. and fine weather.
☉ —— 27.	73	68	30,20	72	69	26 50	194 52	N. by E.	Moderate breezes with rain.
☽ —— 28.	72	68	30,21	72	71	27 38½	195 54	Do.	Do. and hazy.
♂ —— 29.	72	68½	29,90	72	70	28 7	197 12	Do.	Do. and small rain.
☿ —— 30.	71	67	29,68	67	69	28 4	198 25	South.	Strong gales and heavy rain.
♃ —— 31.	63	60	29,92	63	63	27 58	200 41	Do.	Mod. breezes and fine weather.
♀ Aug. 1.	67	61	29,96	67	65	27 48	202 14	Variable.	Moderate and fair.
♄ —— 2.	67	65	30,16	69½	69	27 31½	203 48	S. W.	Light winds and hazy.
☉ —— 3.	72	65	30,16	72	68	27 51	204 18	N. N. E.	Do.
☽ —— 4.	68	67	30,10	68	66	27 35	205 48	W. by S.	Moderate breezes and hazy.
♂ —— 5.	68	64	30,11	68	68	26 51½	206 29	S. W. by W.	Moderate and fine weather.
☿ —— 6.	69	64	30,20	69	67½	25 56	207 54	S. S. W.	Do. and hazy weather.
♃ —— 7.	67½	64	30,26	67½	67	25 9	209 3	Do.	Do. and fair weather.
♀ —— 8.	68	66	30,22	67	68	23 55	210 5	S. E. by S.	Do.
♄ —— 9.	69	67	30,20	69	68	23 9½	210 47	S. S. E.	Brisk gales and hazy weather.
☉ —— 10.	73	68	30,16	73	69½	21 12	210 58	East.	Do. weather.
☽ —— 11.	77	70	30,16	76	77	19 19	211 21	Do.	Fresh gales and squally.
♂ —— 12.	80	70	30,17	78½	80½	17 45		E. by N.	Moderate breezes and hazy.
☿ —— 13.	80	75	30,12	80	80	17 4		N. E. by E.	Do. and hazy weather.
♃ —— 14.	80	76	30,14	80	79½			E. S. E.	Squally with showers.
♀ —— 15.	80½	76	30,16	80½	77			S. E. by E.	Strong squalls with much rain.
♄ —— 16.	80	76	30,15	80	79½			Do.	Do.
☉ —— 17.	79½	77	30,16	79	79½			E. S. E.	Do.
☽ —— 18.	80	76	30,19	79	80			Do.	Moderate and squally.
♂ —— 19.	80	75	30,14	80	79			S. E.	Do. and fair.
☿ —— 20.	81	76	30,11	79½	81	Oitiphea Bay.		S. E. by E.	Do.
♃ —— 21.	81½	76	30,13	80	81½			E. S. E.	Do. with showers of rain.
♀ —— 22.	81½	78	30,20	81½	80			S. E.	Moderate and fair weather.
♄ —— 23.	80	77	30,20	80	79½			S. E. by N.	Gentle breezes and fine weath.
☉ —— 24.	80	78	30,18	80	79½			E. S. E.	Do.
☽ —— 25.	83	79	30,16	83	82	Otaheite.		E. by S.	Light breezes with squalls of rain.
♂ —— 26.	83	78	30,21	82	83			East.	Fresh breezes and much rain.
☿ —— 27.	83½	80	30,19	85	83			E. S. E.	Moderate and hazy weather.
♃ —— 28.	88	78	30,14	88	87			E. by N.	Do.
♀ —— 29.	81½	77	30,17	81	81½	At Matavi Bay.		Variable.	Do. and cloudy weather.
♄ —— 30.	85	78	30,15	84	85			E. N. E.	Do.
☉ —— 31.	84	77	30,15	84	82			S. E. by E.	Light breezes and fair weather.
☽ Sept. 1.	90	76	30,18	88	90			E. by S.	Fresh breezes and flying clouds.
♂ —— 2.	89½	75	30,19	88	89			E. S. E.	Do. and fair weather.

1777.	Therm. B. Greatest Height.	Therm. B. Least Height.	At Noon. Marine Barom.	At Noon. Therm. A.	At Noon. Therm. B.	At Noon. Latitude in.	At Noon. Longitude in.	Winds.	Weather and Remarks.
	°	°		°	°	° ′	° ′		
☿ Sept. 3.	86	74	30,18	84½	85			E. S. E.	Fresh breezes and fair weather.
♃ —— 4.	88	75	30,21	88	86			S. E. by E.	Do. and flying clouds.
♀ —— 5.	89	76	30,21	87	89			E. S. E.	Do.
♄ —— 6.	89	76½	30,19	88	89			S. E.	Do. and fair weather.
☉ —— 7.	82	75	30,08	82	81½			Do.	Do.
☽ —— 8.	84½	74	30,05	84	83½			S. E. by E.	Do.
♂ —— 9.	87½	70	30,15	87½	87			S. E.	Do.
☿ —— 10.	90	70½	30,20	90	89			S. E. by E.	Do.
♃ —— 11.	89½	71	30,20	89	89½			S. E.	Do. and flying clouds.
♀ —— 12.	81	70	30,12	80	81			S. E. by E.	Fresh breezes and squally with rain.
♄ —— 13.	88	72	30,20	88	87			S. E. by S.	Do. and flying clouds.
☉ —— 14.	88	73	30,17	87	88	At Matavi.		Do.	Do. and squally with rain.
☽ —— 15.	86½	74	30,24	86	85	Otaheite.		S. E.	Do. and fair.
♂ —— 16.	88	73	30,20	88	87			S. E. by E.	Do. squally with rain.
☿ —— 17.	83	74	30,16	83	82½			S. E.	Strong gales and squally.
♃ —— 18.	86½	75	30,19	86	85½			S. E. by E.	Fresh gales and do.
♀ —— 19.	38½	76	30,16	88	87½			S. E.	Do.
♄ —— 20.	88½	73	30,11	88¹	88			S. E. by S.	Do. with squalls of rain.
☉ —— 21.	88	72	30,14	38	87			S. E.	Do. and fair weather.
☽ —— 22.	89	72½	30,16	87	89			S. E. by E.	Do.
♂ —— 23.	85	70	30,18	80	82			Do.	Do.
☿ —— 24.	81½	71	30,10	80	82½			E. S. E.	Do.
♃ —— 25.	83	70	30,10	811	82			S. E.	Do.
♀ —— 26.	83½	71	30,11	80½	82½			S. E. by S.	Mod. and very fair weather.
♄ —— 27.	83	70½	30,09	80	82			E. S. E.	Light winds with showers.
☉ —— 28.	81½	69	30,11	80	81			S. E. by E.	Do. and cloudy weather.
☽ —— 29.	80	68	30,15	79½	80	At Emio.		E. by S.	Gentle breezes and fair weather.
♂ —— 30.	82	70	30,10	80	82			E. S. E.	Brisk breezes and do.
☿ Oct. 1.	81½	71	30,14	80	81½			S. E. by E.	Do. and flying clouds.
♃ —— 2.	82	76	30,16	81	82			East.	Do. with showers of rain.
♀ —— 3.	84	77	30,11	82	83			E. N. E.	Do.
♄ —— 4.	84	76	30,12	82	83			E. by S.	Do.
☉ —— 5.	84	75½	30,07	82	83			N. E.	Fresh breezes and do.
☽ —— 6.	83½	75	30,08	80	32			S. S. E.	Do. and flying clouds.
♂ —— 7.	81	76	30,07	79	80			South.	Do. and fair weather.
☿ —— 8.	82	75	30,12	77	81½			S. S. E.	Light breezes and fair.
♃ —— 9.	83	75	30,14	78	80	At Huaheine.		S. E. by E.	Do.
♀ —— 10.	82	76	30,11	80	81			E. S. E.	Do.
♄ —— 11.	81½	74	30,16	79	80			S. E. by E.	Gentle breezes and fine.
☉ —— 12.	82	75	30,11	79	80½			E. S. E.	Do.
☽ —— 13.	83	76	30,16	81	81			S. E.	Do.
♂ —— 14.	82½	75	30,17	81	81½			S. E. by S.	Do.
☿ —— 15.	83½	74	30,12	82	81			S. S. E.	Do.
♃ —— 16.	84	75	30,15	83	83			S. S.	Moderate breezes and fair.

1777.	Therm. B. Greatest Height.	Therm. B. Least Height.	At Noon. Marine Barom.	At Noon. Therm. A.	At Noon. Therm. B.	At Noon. Latitude in.	At Noon. Longitude in.	Winds.	Weather and Remarks.
	°	°		°	°	° ′	° ′		
♀ Oct. 17.	85	76	30,06	83	84			S. E. by E.	Mod. breezes with ſhowers of rain.
♄ —— 18.	90½	78	30,18	90	90½			E. S. E.	Do. and fair weather.
☉ —— 19.	89½	76	30,17	87	88			S. E.	Do.
☽ —— 20.	88	77	30,14	85	86			S. E. by E.	Do.
♂ —— 21.	88	76	30,15	86½	87			E. S. E.	Do.
☿ —— 22.	85	75	30,23	83½	84			S. E. by E.	Gentle breezes and flying clouds
♃ —— 23.	84	76	30,20	85	86			E. S. E.	Do.
♀ —— 24.	87	74	30,17	83	83½			S. E. by E.	Do.
♄ —— 25.	85	74	30,14	82	83	At Huaheine.		E. S. E.	Briſk trade breeze and fair.
☉ —— 26.	88	73½	30,18	87	87			Do.	Do.
☽ —— 27.	86	72	30,17	86	85			S. E.	Do. and ſhowers of rain.
♂ —— 28.	89	75	30,17	86	88			E. S. E.	Do.
☿ —— 29.	88	74	30,16	86	87			Do.	Do. and fair.
♃ —— 30.	88½	75	30,18	84	87			S. E. by E.	Do.
♀ —— 31.	86	73	30,12	83	84			E. S. E.	Gentle breezes and fair.
♄ Nov. 1.	83	72	30,13	82	81			S. E. by S.	Light winds and fair.
☉ —— 2.	84	73	30,16	83	81½			Do.	Do.
☽ —— 3.	86	74	30,18	81	80			S. E. by E.	Moderate and fair.
♂ —— 4.	86	72	30,14	83	84			Do.	Do.
☿ —— 5.	85	73	30,11	83	84			E. S. E.	Do.
♃ —— 6.	89	73	29,98	88	87			S. S. E.	Do.
♀ —— 7.	87	72	29,90	84	82			S. S. W.	Moderate with rain at times.
♄ —— 8.	86	74	29,92	84	84			S. W.	Do.
☉ —— 9.	87	73	30,00	86	87			S. E. by E.	Do. } Much lightning
☽ —— 10.	83	70	30,04	80	80½			E. S. E.	Much rain. } and thunder.
♂ —— 11.	84	71	30,14	82	81			S. W.	Light winds and fair weather.
☿ —— 12.	89	73	30,05	88	89			E. S. E.	Do.
♃ —— 13.	81	75	30,05	90	91			S. E.	Do.
♀ —— 14.	92	77	30,05	91	91½			S. E. by E.	Briſk winds and ſhowers of rain.
♄ —— 15.	88	71	30,05	86	87	At Ulietea.		South.	Briſk w. and ſhowers of rain, light. in the E.
☉ —— 16.	78	70	30,06	76½	77			E. by S.	Do. with rain at times.
☽ —— 17.	85	74	30,10	82	82			E. S. E.	Do. and fair.
♂ —— 18.	85	73	30,10	83	84			Variable.	Light winds with heavy rains.
☿ —— 19.	79	72	30,00	77½	77			Eaſt.	Briſk gales with rain.
♃ —— 20.	80	74	29,96	79½	79			Weſt.	Thunder light. and heavy rain.
♀ —— 21.	80½	73	30,00	80	80			Variable.	Light breezes and much rain.
♄ —— 22.	84	72	30,07	83½	83			Do.	Do. and fine weather.
☉ —— 23.	89	72½	29,99	88	88½			W. by S.	Gentle breezes and do.
☽ —— 24.	88	73	29,93	36	87			Do.	Moderate and fair weather.
♂ —— 25.	86	72	29,95	85	85			Variable.	Light winds and fair weather.
☿ —— 26.	87	73	30,00	86	86			N. E.	Do. & cloudy with rain at times.
♃ —— 27.	87	74	30,11	84	83			S. E. to S.	Much thunder, light. and rain.
♀ —— 28.	85	75	30,02	84	82			E. S. E.	Moderate and fine weather.
♄ —— 29.	85	75	30,10	84	81½			N. S. W.	Light winds and fair.

1777.	Therm. B Greatest Height.	Therm. B Least Height.	At Noon. Marine Barom.	Therm. A.	Therm. B.	Latitude in.	Longitude in.	Winds.	Weather and Remarks.
	°	°		°	°	° ′	° ′		
☉ Nov. 30.	85	74	30,00	84	80	At Ulietea.		E. S. E.	Light winds and fair weather.
☽ Dec. 1.	84½	73	30,01	84	82			West.	Do.
♂ —— 2.	85	74	30,09	84	84			N. N. W.	Moderate and fair.
☿ —— 3.	84	74½	30,04	83	81			North.	Do. and hazy.
♃ —— 4.	83½	74	30,10	83	82			N. N. W.	Fresh breezes and flying clouds.
♀ —— 5.	84	73	30,10	84	83			Do.	Do.
♄ —— 6.	85	75	30,06	85	82			Do.	Do. and fair.
☉ —— 7.	84½	75	30,10	83	84	Of Bolabola.		North.	Light breezes and hazy.
☽ —— 8.	83	74	30,04	82	81			E. N. E.	Fresh breezes and squally.
♂ —— 9.	83½	73	30,07	83	82			E. by N.	Moderate breezes and fine.
☿ —— 10.	83	72	30,05	82½	82	15 43½ S	207 48 E	Do.	Do. and fine.
♃ —— 11.	83	73	30,00	82½	82	14 33½	207 39	N. E.	Do. with squalls of rain.
♀ —— 12.	84	77	30,00	83	82	13 44¾	207 0	N. E. by N.	Do. and fine.
♄ —— 13.	83	78	30,01	83	82	13 0	206 21	E. by N.	Do. and fair.
☉ —— 14.	83	77	30,05	83	83	12 16½	205 50	N. E. by E.	Fresh breezes and fair.
☽ —— 15.	84	76	30,08	83	83½	11 3¾	205 27	E. by N.	Do.
♂ —— 16.	84	77	30,07	83	82	10 1½	205 10	Do.	Light breezes and fair.
☿ —— 17.	83	80	30,14	82	82	8 56	204 53	N. E.	Fresh breezes and fine.
♃ —— 18.	82½	79	30,10	81½	81	7 37	204 16	E. by N.	Do.
♀ —— 19.	82½	79	30,05	81	82	6 24	204 16	E. N. E.	Moderate and fair.
♄ —— 20.	82	78	30,06	80½	81	4 55	204 0	E. by N.	Do.
☉ —— 21.	82	77	30,04	81	80	3 33½	203 44	East.	Do.
☽ —— 22.	79	76	30,03	78	78½	2 3½	202 40	E. by N.	Gentle breezes and fine.
♂ —— 23.	79	75½	30,04	78	77½	0 34	203 30	E. S. E.	Do.
☿ —— 24.	79	75½	30,07	79	78	0 43 N	202 36	E. by S.	Do.
♃ —— 25.	80	76	30,08	79	79½			S. S. E.	Moderate and hazy.
♀ —— 26.	80	75	29,99	79	79			E. by S.	Fresh breezes and do.
♄ —— 27.	80½	76	39,10	80	80			E. by S.	Do.
☉ —— 28.	81	76	30,07	80½	80			Do.	Do.
☽ —— 29.	81½	75	30,06	80½	81	1 57 N	202 20	Do. ½ S.	Do.
♂ —— 30.	81½	74	30,00	81	80½	At Turtle Island.		E. S. E.	Do.
☿ —— 31.	82	73	29,96	81	80			East.	Do. with flying clouds.
1778.									
♃ Jan. 1.	81	74	29,96	80½	80			E. N. E.	Brisk gales and cloudy.
♀ —— 2.	82	74½	29,97	81	81½	2 25	202 21	Variable.	Do.
♄ —— 3.	82	77	29,97	81	80	3 19	202 33	E. by S.	Moderate hazy weather.
☉ —— 4.	81½	77	29,90	81	80	4 5	202 21	E. S. E.	Moderate and flying clouds.
☽ —— 5.	81	76	29,90	80	79	4 58	202 49	Do.	Squally with rain at times.
♂ —— 6.	81	76	29,90	80½	80	5 53	202 49	Do.	Do.
☿ —— 7.	81	76½	30,04	80	79	6 38	203 40	S. E. by S.	Strong gales with rain.
♃ —— 8.	81	75	29,96	79½	75½	7 46	204 40	E. S. E.	Moderate and hazy.
♀ —— 9.	80	75	29,95	80	78½	8 11½	204 37	E. N. E.	Light winds and fair.
♄ —— 10.	81	77	29,96	80	78½	9 30½	204 27	E. by S.	Moderate breezes and fair.
☉ —— 11.	80½	77	29,99	80	78½	10 41½	204 26	Variable.	Do.

1778.	Therm. B. Greatest Height.	Therm. B. Least Height.	At Noon. Marine Barom.	At Noon. Therm. A.	At Noon. Therm. B.	At Noon. Latitude in.	At Noon. Longitude in.	Winds.	Weather and Remarks.
	°	°		°	°	° ′	° ′		
☽ Jan. 12.	81	76	30,03	80	79	12 8 N	203 37 W	N. E. by E.	Fresh breezes and fair.
♂ —— 13.	79	74½	30,05	78	78½	14 10⅔	202 30	N. E.	Do.
☿ —— 14.	79½	76	30,14	79	77½	15 56	201 31	N. E. by E.	Fresh gales and hazy.
♃ —— 15.	78	74	30,24	77	76½	17 43	200 51	E. N. E.	Do. and fair.
♀ —— 16.	79	73	30,23	77	75½	19 2¾	200 36	East.	Moderate breezes and fair.
♄ —— 17.	78	73	30,16	77	76	20 26	200 21	E. by N.	Do.
☉ —— 18.	78½	71	30,14	77	77	21 12	200 21	East.	Light winds and fair.
☽ —— 19.	78	73	30,20	77	75½	21 48	200 15	E. N. E.	Moderate breezes and do.
♂ —— 20.	78½	73	30,18	76	77½	21 54	200 21	Do.	Do.
☿ —— 21.	78	72½	30,08	77	76½			E. by S.	Do.
♃ —— 22.	78½	73	30,10	77	77			E. S. E.	Fresh breezes with much rain.
♀ —— 23.	79	72½	30,04	77	78			E. by N.	Light breezes with rain.
♄ —— 24.	78	72	30,14	77	78			N. E.	Light winds and fair.
☉ —— 25.	78½	73	30,21	77	75½			E. N. E.	Fresh breezes and do.
☽ —— 26.	78	74	30,18	77	76			E. S. E.	Moderate breezes and fair.
♂ —— 27.	78½	73	30,19	77	74½	21 56	200 27½ E	N. E. by N.	Light winds and fair.
☿ —— 28.	78	73	30,22	77	75½	At Sandwich Islands.		E. N. E.	Do.
♃ —— 29.	77	71	30,15	76½	75			E. by N.	Do.
♀ —— 30	78½	72	30,16	77	76			E. N. E.	Do.
♄ —— 31.	77½	72	30,17	76½	75			N. E.	Fresh breezes and squally.
☉ Feb. 1.	77	73	30,11	76	75½			E. by N.	Fresh breezes and cloudy.
☽ —— 2.	77½	72	30,14	76	76½	21 48¾		East.	Do. and fair.
♂ —— 3.	77	73	30,20	76	75	23 3	199 13	Variable.	Do. and showers of rain.
☿ —— 4.	76½	72	30,26	75½	74	24 31	199 11	E. N. E.	Moderate and fair.
♃ —— 5.	75½	71	30,40	75	74	26 7	199 25	East.	Do. with flying clouds.
♀ —— 6.	76	71	30,38	75	73	27 41	200 4	S. E. by S.	Do.
♄ —— 7.	73½	70	30,42	72½	71½	28 56	199 46	E. N. E.	Moderate breezes and fair.
☉ —— 8.	73	68	30,35	72	72½	30 18	200 39	S. E.	Do.
☽ —— 9.	73½	67½	30,35	71½	72½	30 59	201 28	South.	Little wind and fine.
♂ —— 10.	71	61	30,38	69	62	31 18	202 57	N. by W.	Moderate and hazy.
☿ —— 11.	68	57	30,53	66	59	30 55	205 11	N. N. E.	Fresh breezes and hazy.
♃ —— 12.	68	56	30,60	66	60	30 7½	206 29	E. N. E.	Do.
♀ —— 13.	65½	55	30,55	64	60½	31 18	206 14	Do.	Gentle breezes and cloud.
♄ —— 14.	66	58	30,50	64½	61½	31 33⅓	205 50	N. E. by E.	Light breezes and fair.
☉ —— 15.	64	59	30,60	64	58½	32 27	205 23	Do.	Moderate and cloudy.
☽ —— 16.	63½	55	30,50	62	56	33 44	205 38	E. N. E.	Do.
♂ —— 17.	63½	56	30,53	62	57	34 52	205 56	E. by N.	Moderate and dark cloudy.
☿ —— 18.	61½	52½	30,61	61	55	36 20	206 1	E. N. E.	Do.
♃ —— 19.	61	50	30,68	59	55½	37 23	207 3	S. E.	Do. and fair.
♀ —— 20.	59	52	30,57	57	58	38 6	208 3	South.	Do.
♄ —— 21.	60	51½	30,37	59	55	39 7	210 9	Do.	Do.
☉ —— 22.	61	52½	30,33	60	56	40 17⅓	212 39	S. S. E.	Do. and hazy.
☽ —— 23.	60½	51	30,43	60	53	41 10½	215 40	Do.	Do.
♂ —— 24.	59½	50	30,43	59	51	41 41½	217 44	Variable.	Do. and clear.

1778.	Therm. B. Greatest Height.	Least Height.	At Noon. Marine Barom.	Therm. A.	Therm. B.	Latitude in.	Longitude in.	Winds.	Weather and Remarks.
	°	°		°	°	° ′	° ′		
☿ Feb. 25.	58	49	30,40	57	51	42 29½ N	219 56 E	S. E. by S.	Moderate and close cloudy we.
♃ —— 26.	58½	49	30,48	57½	52	43 16	222 53	Do.	Do.
♀ —— 27.	57½	49½	30,53	56	49	43 53	225 41	Do.	Fresh breezes and do.
♄ —— 28.	56	47½	30,25	55½	50	44 20	227 15	Do.	Moderate and do.
☉ Mar. 1.	58	49	30,20	57½	51½	44 51	228 46	Do.	Light winds and fine.
☽ —— 2.	58½	49½	30,34	56	51	44 52	228 49	N. N. E.	Do. and hazy at times.
♂ —— 3.	57	45	30,35	56	46	44 34	229 44	N. by E.	Moderate and flying clouds.
☿ —— 4.	56	45	30,06	56	49	44 1	231 40	North.	Fresh gales and flying clouds.
♃ —— 5.	57½	48½	29,94	57	50	43 47	233 20	Do.	Light winds and hazy.
♀ —— 6.	57	46	30,04	56	46½	44 10	234 55½	W. N. W.	Do. and thick cloudy weather.
♄ —— 7.	56½	45	30,32	56	49	44 30	235 14	Variable.	Light winds and fine.
☉ —— 8.	52	43	30,26	51	44½	44 23	235 17	W. by N.	Fresh gales and squally.
☽ —— 9.	53½	42	30,16	53	44½	43 45	234 47	Do.	Moderate breezes but squally.
♂ —— 10.	52½	42	29,90	52	43	43 41	235 0	N. W.	Moderate and cloudy.
☿ —— 11.	51	38	29,79	49½	39½	43 38	235 4	W. N. W.	Fresh gales with heavy squalls.
♃ —— 12.	50	36	30,00	48	37½	43 4	234 35	N. N. W.	Do.
♀ —— 13.	48	36	30,23	47½	41	42 48	233 30	Do.	Moderate and cloudy.
♄ —— 14.	50	41	30,10	50	42	43 14	233 37	W. N. W.	Strong gales and squally.
☉ —— 15.	49½	41	30,35	49	46	42 43	231 48	N. N. W.	Fresh gales and squally.
☽ —— 16.	53	44½	30,40	53	48	43 2	233 14	W. N. W.	Do. with small rain at times.
♂ —— 17.	54	46	30,28	53½	46½	43 58½	233 50	Do.	Do.
☿ —— 18.	54½	44½	30,08	54	47	44 49½	234 16	N. W.	Do. and hazy.
♃ —— 19.	54½	44	30,27	54	51½	44 53⅔	234 0	S. E.	Moderate and fine.
♀ —— 20.	55	47	30,23	54½	50	45 28½	234 25	Variable.	Light airs and fair.
♄ —— 21.	54½	44	30,02	54	48	45 49	234 40	South.	Do. cloudy and hazy.
☉ —— 22.	53½	41½	30,05	53	42½	47 17½	235 20	West.	Brisk gales and squally.
☽ —— 23.	52½	42	29,94	52	45	47 44	234 31	S. by W.	Strong gales with much rain.
♂ —— 24.	52	42	30,18	51½	45½	47 37	234 34	W. N. W.	Moderate with flying clouds.
☿ —— 25.	53	42½	29,70	52½	45	48 32	233 45	S. S. W.	Fresh gales with rain.
♃ —— 26.	51	42	29,97	49	45	48 17	233 8	N. W.	Moderate and fair.
♀ —— 27.	53½	43	30,18	53	45	47 55⅔	232 9	W. N. W.	Do. with flying clouds.
♄ —— 28.	53	44	30,20	53	47	49 0	233 9	W. by S.	Light breezes and foggy.
☉ —— 29.	56	43½	30,18	55	45	49 27½	233 20	W. N. W.	Do. and fine.
☽ —— 30.	56½	43	30,07	56	47½			Variable.	Do.
♂ —— 31.	54	43½	29,96	53	47			S. W.	Do. and hazy.
☿ April 1.	56	44	30,11	55	56			South.	Moderate and fine at times.
♃ —— 2.	63	45	30,02	62	63			S. S. E.	Do. and fair.
♀ —— 3.	61½	41	29,76	59	59			N. N. W.	Do.
♄ —— 4.	65½	50	29,57	64½	65	King George's Sound.		S. by E.	Light breezes and very fine.
☉ —— 5.	59½	47	29,62	58	57			E. N. W.	Do. and fair.
☽ —— 6.	59	49	29,70	53½	55			S. S. E.	Moderate but very foggy.
♂ —— 7.	59½	48	29,74	58	56			South.	Do. with flying clouds.
☿ —— 8.	52½	46	29,31	51	50			N. E.	Strong gales and much rain.
♃ —— 9.	51	45	29,31	48	49			S. S. E.	Moderate with a thick fog.

1778.	Therm. B. Greatest Height.	Least Height.	At Noon. Marine Barom.	Therm. A.	Therm. E.	Latitude in.	Longitude in.	Winds.	Weather and Remarks.
	°	°		°	°	° ′	° ′		
♀ April 10.	47½	44	29,36	45	45½			S. S. E.	Thick fog with ſhowers of rain
♄ —— 11.	49½	42	29,44	49	48			S. W.	Moderate breezes with clouds
☉ —— 12.	49	41½	29,78	48	46			S. by W.	Do. with ſhowers of rain.
☽ —— 13.	47	41	29,50	45	46			S. W.	Light breezes and do.
♂ —— 14.	49	41½	29,48	47	48			S. by E.	Strong gales with ſmall rain.
☿ —— 15.	46	42	29,62	44½	44			South.	Freſh breezes and much rain.
♃ —— 16.	49	43	29,78	48½	47			W. S. W.	Moderate with rain.
♀ —— 17.	49½	38	29,60	50	49			N. N. E.	Do. with fine weather.
♄ —— 18.	49	43	29,43	48	48½	49 36 N	233 26 E	S. by E.	Freſh breezes and do.
☉ —— 19.	49½	41	29,60	50	49	King George's Sound.		North.	Moderate and do.
☽ —— 20.	50½	42	29,65	52	50			S. W.	Do.
♂ —— 21.	49½	44	29,60	49	47			S. S. E.	Light breezes with fog & rain.
☿ —— 22.	59½	46	29,63	59½	49			S. W.	Do. with fine weather.
♃ —— 23.	64½	52	29,68	63	64½			N. E.	Fine weather.
♀ —— 24.	64	51	29,96	62	64			North.	Do.
♄ —— 25.	62	50	29,90	58	61			S. W.	Moderate breezes and fine.
☉ —— 26.	55	49	29,76	54½	52			Variable.	Light breezes with rain.
☽ —— 27.	55	48	29,46	54	48½	49 37	231 41	S. E.	Strong gales and hazy.
♂ —— 28.	54	43	29,54	53	47	47 57½	229 15½	Do.	Freſh gales and fair.
☿ —— 29.	53½	43	29,38	53	44½	51 53	226 55	S. W. by S.	Do. and ſqually.
♃ —— 30.	49	40½	29,40	48	45½	53 20	225 22	S. E.	Moderate breezes and fine.
♀ May 1.	51	40	29,62	50	44	54 43	224 31	S. E. by E.	Do. and hazy with ſome rain.
♄ —— 2.	50	41	30,08	49½	44	56 51	224 1	Do.	Squally with rain.
☉ —— 3.	52	42	29,94	51½	47	58 18	222 20	N. by W.	Light winds and hazy.
☽ —— 4.	54	43	29,96	53½	44½	58 19	220 45	W. N. W.	Do. and fine.
♂ —— 5.	54	42	30,16	53	44	58 39	220 56	N. W. by W.	Do.
☿ —— 6.	51½	44	30,04	50½	48	59 2	220 57	E. N. E.	Light breezes and a little foggy.
♃ —— 7.	57	45	29,96	56½	53	59 25	219 28	N. E.	Do. and fine.
♀ —— 8.	58	46	29,88	57	49	59 11	218 23	W. by N.	Do. and do.
♄ —— 9.	59	46½	29,86	59	52½	59 33⅓	217 20	Variable.	Do.
☉ —— 10.	58	46	29,58	58	47½	59 51½	216 19	N. by E.	Do.
☽ —— 11.	57	45	29,60	56	56½	59 52½	215 17	Variable.	Do.
♂ —— 12.	57	47	29,52	57	45	60 16	213 4	S. E.	Moderate and hazy.
☿ —— 13.	56	44	29,92	56	45	60 25	212 45	E. S. E.	Freſh gales and ſqually weath.
♃ —— 14.	58	42	29,80	58	49			Do.	Do. with much rain.
♀ —— 15.	52	38	29,83	51	40½	Sandwich Sound.		Do.	Do.
♄ —— 16.	57	40	29,75	51	47½			East.	Moderate breezes and fine.
☉ —— 17.	53	42	29,90	51	43	60 50½	—	E. N. E.	Do. and hazy.
☽ —— 18.	51	40	29,71	51	42	60 33		N. E.	Do.
♂ —— 19.	51½	41½	29,67	51	43	60 12	212 12	Variable.	Light airs and hazy.
☿ —— 20.	53	37	29,72	52	40	60 0	211 40	N. N. E.	Do.
♃ —— 21.	50	39½	29,92	50	42	59 29	210 23	W. N. W.	Moderate and fair weather.
♀ —— 22.	49	40	30,12	48½	41½	58 24	208 54	Do.	Strong gales and fair.
♄ —— 23.	50	41	30,25	49	44	59 6½	208 57	S. by W.	Moderate breezes and fair.

1778.	Therm. B Greatest Height.	Therm. B Least Height.	At Noon. Marine Barom.	Therm. A.	Therm. B.	Latitude in.	Longitude in.	Winds.	Weather and Remarks.
	°	°		°	°	° ′	° ′		
☉ May 24.	52	41½	30,17	52	44½	58 11 N	207 59 E	W. N. W.	Light winds and fine weather.
☽ —— 25.	52	41	30,18	52	44	58 40	207 41	N. N. E.	Moderate gales and hazy.
♂ —— 26.	52	41½	29,92	52	42	59 8½	206 55	North.	Fresh breezes and fine weather.
☿ —— 27.	49½	39	29,75	49	44	59 26	207 0	Variable.	Light winds and much rain.
♃ —— 28.	50	41	30,17	49½	44	5 52 ⅓	207 15	N. N. E.	Moderate and fine weather.
♀ —— 29.	51	40	29,98	50	42	60 6	207 28	N. by E.	Fresh gales and hazy do.
♄ —— 30.	52	41	29,77	52	48	60 36⅔	208 0	N. N. W.	Gentle breezes and flying clouds.
☉ —— 31.	52	41	29,72	52	46	61 12	208 32	N. E.	Light breezes and rainy weath.
☽ June 1.	53	44	29,57	53	47			E. by N.	Moderate breezes and hazy.
♂ —— 2.	53	43½	29,56	53	43½	60 59½	208 22	S. W.	Do.
☿ —— 3.	52	41	29,53	52	45	60 41	208 0½	W. S. W.	Do. and fine weather.
♃ —— 4.	53	41	29,67	53	43	60 11	207 26	S. by W.	Do.
♀ —— 5.	54½	41	29,73	54	46	59 49	207 14	West.	Light breezes and fine weather.
♄ —— 6.	52½	42	30,00	51	45½	58 38	207 17	W. S. W.	Fresh breezes and do.
☉ —— 7.	52	43	30,32	52	47	58 2¼	207 37	Variable.	Light breezes and hazy weather.
☽ —— 8.	52	43	30,23	52	47	57 41	208 1	S. E. by S.	Moderate breezes and open do.
♂ —— 9.	52½	42	29,17	52	46½	57 30	207 37	S. S. E.	Do. foggy with much rain.
☿ —— 10.	52	42	30,11	52	43	57 5	207 31	S. E.	Do.
♃ —— 11.	52	41	29,97	52	43	56 47	207 50	S. E. by E.	Fresh gales with rainy foggy weather.
♀ —— 12.	52½	42	30,11	52½	46	57 4	206 25	W. S. W.	Moderate and fair weather.
♄ —— 13.	54	43	30,02	54	46	56 49	205 50	S.W.by W.	Fresh breezes and fine weather.
☉ —— 14.	52	42	29,98	51	44½	56 23	205 50	Do.	Moderate and cloudy do.
☽ —— 15.	51½	44	29,50	50	45	56 36	202 39	S. S. E.	Strong gales and thick rainy do.
♂ —— 16.	52	43	29,91	51	44	55 49	201 30	N. W.	Moderate and hazy weather.
☿ —— 17.	52	42	30,07	52	44½	55 31	202 12	W. S. W.	Light breezes and fair.
♃ —— 18.	53	43	30,06	53	47	55 24	201 59	Variable.	Do.
♀ —— 19.	53	43½	29,85	53	47	55 16	200 38	N. E.	Mod. breezes and fine weather.
♄ —— 20.	53½	43	29,81	53½	48	54 44	198 7	N. N. E.	Gentle breezes and fair do.
☉ —— 21.	53½	43	29,72	53	47	54 17	197 53	N.W.by W.	Light breezes and fair do.
☽ —— 22.	56	43	29,68	56	50	53 50	197 10	S. W.	Do. and foggy weather.
♂ —— 23.	55	42	29,52	54½	46	53 40	196 34	W. by N.	Moderate breezes with rain.
☿ —— 24.	53	41	29,80	51	43	54 14	195 49	W. by S.	Fresh gales and cloudy weather.
♃ —— 25.	52	41	29,75	51½	46	54 6	195 30	East.	Moderate breezes and hazy do.
♀ —— 26.	52	42	29,80	51½	45	53 50	193 53	S. by E. ½ E.	Moderate with thick fog.
♄ —— 27.	55	42	29,80	52	46	53 54	193 50	N. N. W.	Light breezes with hazy weath.
☉ —— 28.	51½	40½	29,70	51	43½	53 57	193 35	S. E.	Do. with hazy dull weather.
☽ —— 29.	51	41	29,95	50½	43½	53 44	193 20	N. W.	Do. with small rain.
♂ —— 30.	53	41½	30,07	53	44	53 54	193 20	N. N. W.	Fresh breezes and hazy weather.
☿ July 1.	53	40½	30,28	53	41	53 54	193 20	Do.	Mod. breezes and foggy do.
♃ —— 2.	53½	41	30,24	52	47	54 19	193 20	E. S. E.	Do. and hazy weather.
♀ —— 3.	53	43	29,78	52	46½	55 14	195 20	Do.	Do. and cloudy weather.
♄ —— 4.	56	43	29,67	52	44	55 48	196 46	E. by S.	Do. with fine weather.
☉ —— 5.	56	41½	29,68	52	42	56 32	198 58	S.E. by E.	Mod. and hazy with small rain
☽ —— 6.	52½	39	29,73	51	40	56 55	199 49	North.	Do. and hazy weather.

1778.	Therm. B. Greatest Height.	Therm. B. Least Height.	At Noon. Marine Barom.	At Noon. Therm. A.	At Noon. Therm. B.	At Noon. Latitude in.	At Noon. Longitude in.	Winds.	Weather and Remarks.
	°	°		°	°	° ′	° ′		
♂ July 7.	51½	40½	30,01	51½	48½	57 4 N	200 3 E	S. S. W.	Light breezes and fine weather.
☿ —— 8.	52	45	29,98	50	46	57 17	200 30	N. E.	Do.
♃ —— 9.	51½	40	30,13	53	45	57 48	201 26	N. W.	Do.
♀ —— 10.	54½	46	30,12	54½	49	58 16	201 31	S. E.	Do.
♄ —— 11.	54	41	30,16	54	44½	58 4	201 31	S. S. W.	Moderate and foggy weather.
☉ —— 12.	54½	40½	30,10	54	49	58 11¼	200 10	S. W.	Moderate and fine weather.
☽ —— 13.	56	50	30,07	56	50½	58 15⅓	199 44	N.W. by W	Light breezes and do.
♂ —— 14.	58	50	30,10	57½	54	58 14½	198 21	S.W. by W.	Light airs and do.
☿ —— 15.	61	46½	30,17	61	49	58 21½	198 0	South.	Do. and foggy weather.
♃ —— 16.	63	42	30,28	63	49½	58 28⅔	197 36	W. N. W.	Do. and fine weather.
♀ —— 17.	62	49	30,30	61	54	58 53½	197 12	Variable.	Do. and fair weather.
♄ —— 18.	61	49½	30,17	61	58	59 28	197 37	S. W.	Gentle breezes and fair.
☉ —— 19.	63	54	29,85	63	63	59 37½	197 33	West.	Light breezes and very fine weather.
☽ —— 20.	65	57½	29,62	65	61	59 37½	197 29	S. E.	Fresh breezes and fair weather.
♂ —— 21.	63	57	29,70	63	62	59 35½	197 23	S. S. E.	Light breezes and fine weather.
☿ —— 22.	63	52	29,79	62	51	58 54	197 23	N. N. W.	Moderate and cloudy weather.
♃ —— 23.	61	50	29,73	60	51	58 26	195 33	West.	Fresh breezes and do.
♀ —— 24.	59	47½	29,65	57	50½	58 7½	193 19	N. E.	Mod. breezes and thick weather.
♄ —— 25.	58	45	29,68	56	45½	58 18	192 0	N. by W.	Foggy with small rain.
☉ —— 26.	58½	44	29,86	46	46	58 37½	191 32	E. N. E.	Thick hazy weather.
☽ —— 27.	57	41	29,84	54½	43½	59 6	191 0	N. N. E.	Gentle breezes and foggy do.
♂ —— 28.	54½	42	29,77	54	48½	59 53	190 7	Do.	Fresh breezes and fine do.
☿ —— 29.	55	46	29,54	55	46½	60 22	187 38	Variable.	Light winds and foggy with r.
♃ —— 30.	54½	43	29,64	54½	45	60 28	188 8	N.W. by W.	Do.
♀ —— 31.	57	44	29,58	54	47	61 20	189 30	S. S. E.	Moderate and cloudy weather.
♄ Aug. 1.	56	46	29,83	56	49½	61 56	190 51	N. N. E.	Fresh breezes and do.
☉ —— 2.	56	47	29,77	56	49	62 6	191 13	E. by S.	Mod. breezes and rainy weather.
☽ —— 3.	54	46	30,01	53	53	62 33	191 34	S. E.	Light w. and cloudy with rain.
♂ —— 4.	58	50½	30,00	58	52	63 54	193 29	East.	Fresh gales and thick rain.
☿ —— 5.	57½	48	30,76	57	50	64 30	193 20	S. by W.	Mod. breezes and thick hazy w.
♃ —— 6.	58	48	29,75	58	51	64 40	192 43	South.	Do. and hazy weather.
♀ —— 7.	58½	47	29,85	58	49	64 56	192 33	S. S. W.	Light breezes and thick do.
♄ —— 8.	57½	45	29,70	57	47	65 0	192 20	Variable.	Do. with rain.
☉ —— 9.	57	44	29,70	55	45	65 46	191 5	N. N. W.	Strong gales and do.
☽ —— 10.	54½	40	30,06	52	45	65 35	188 48	South.	Light breezes and fine weather.
♂ —— 11.	54	42½	29,94	53	47½	66 5	191 1	S. S. W.	Moderate and cloudy do.
☿ —— 12.	53½	40½	29,97	53	41½	66 18½	190 49	North.	Do. with flying clouds.
♃ —— 13.	53	38½	30,10	52	45	66 29½	191 49	N. by E.	Light winds and fine weather.
♀ —— 14.	53	42	30,18	51½	45	67 33	194 55	S. by E.	Fresh gales and rainy do.
♄ —— 15.	49½	43	29,79	49	43½	68 22½	192 14	South.	Strong gales and hazy do.
☉ —— 16.	50	39	29,85	49	38	69 46	193 36	W. S. W.	Mod. gales and dull hazy do.
☽ —— 17.	48½	35½	30,10	48	35½	70 32½	197 35	Do.	Fresh gales and hazy do.
♂ —— 18.	47½	32½	30,02	47	32½	70 43	198 4	W. by S.	Moderate gales and do.
☿ —— 19.	51	[illegible]	30,07	51	34	70 7⅓	196 9	Do.	Do. and hazy weather.

1778.	Therm. B. Greatest Height.	Therm. B. Least Height.	At Noon. Marine Barom.	At Noon. Therm. A.	At Noon. Therm. B.	At Noon. Latitude in.	At Noon. Longitude in.	Winds.	Weather and Remarks.
	°	°		°	°	° ′	° ′		
♃ Aug. 20.	50	34	29,99	49½	38½	70 14 N	195 49 E	W. by N.	Light winds and foggy weather.
♀ —— 21.	51	39	29,76	50½	44	69 53½	195 22	Variable.	Light breezes and do.
♄ —— 22.	55½	34½	29,73	55½	44½	69 38	194 32	S. by W.	Moderate and do. with rain.
☉ —— 23.	54	39½	29,57	54	42½	69 40	193 58	N. by W.	Do.
☽ —— 24.	54	33½	30,10	54	36	69 30½	189 40	N.W. by N.	Fresh breezes and flying clouds.
♂ —— 25.	51½	36	29,80	51	41	69 26	186 44	S. S. W.	Do. and squally weather.
☿ —— 26.	50	35½	29,96	50	35	69 37¾	183 16	N. N. W.	Moderate and hazy weather.
♃ —— 27.	51	35	29,66	50	41	69 35¾	182 55	W. by N.	Do. with rain.
♀ —— 28.	58	31	29,96	58	35	69 19⅓	182 9	Variable.	Moderate and foggy weather.
♄ —— 29.	53	34	29,89	49	37	68 38	181 5	W. N. W.	Do. and cloudy with rainy do.
☉ —— 30.	52	33	30,10	49	33½	68 5	182 33	N.W. by N.	Moderate with much snow.
☽ —— 31.	51½	34	30,21	51	35½	67 38	185 19	N. W.	Do. with flying clouds.
♂ Sept. 1.	51	34	30,20	50	35½	67 16	187 11	North.	Mod. and cloudy with show. of snow.
☿ —— 2.	52	34	30,07	52	38½	66 40½	189 12	N. by W.	Do.
♃ —— 3.	52½	34	29,97	52	40½	65 31⅓	188 50	Do.	Do. with flying clouds.
♀ —— 4.	51	37	29,76	50	41½	64 39⅓	187 47	N. W.	Moderate and fine weather.
♄ —— 5.	54	38	29,84	54	40	64 8⅔	189 39	N. N. W.	Do. and hazy.
☉ —— 6.	53	40½	29,66	49	43	63 56½	195 50	N. W.	Light breezes and very fine w.
☽ —— 7.	53	44	29,84	53	48	64 15½	194 0	Do.	Do.
♂ —— 8.	54	43	30,00	53	47	64 22½	195 50	S. W.	Moderate and fine weather.
☿ —— 9.	53½	44	29,90	52	46	64 37	197 43	S. by W.	Do. and cloudy with rain.
♃ —— 10.	52	40½	29,97	51½	45	64 33		Variable.	Do. with light clouds.
♀ —— 11.	51½	39	30,01	51	42	64 20	In Norton	N. by E.	Light breezes and clear weath.
♄ —— 12.	51	42	30,00	50½	46½	64 22	Bay.	Do.	Do.
☉ —— 13.	52	43	29,90	52	49½	64 32½	196 43	N. N. E.	Do. and very fine weather.
☽ —— 14.	53	43	29,80	52	48	64 32¾		North.	Fresh breezes and fine do.
♂ —— 15.	52	38½	29,79	50	42	64 18		N. N. E.	Moderate breezes and fair do.
☿ —— 16.	51	37	29,78	48	41½	64 22		West.	Light breezes and very fine do.
♃ —— 17.	50½	37½	29,78	49	43	64 12½	198 3	S. E.	Moderate and do.
♀ —— 18.	52	39	29,90	51	43½	63 37	197 48	Variable.	Do.
♄ —— 19.	50	39	29,97	50	49	63 41	195 38	N. E. by E.	Fresh gales and fair do.
☉ —— 20.	48	41	29,73	46	42½	63 40	191 54	N. N. E.	Fresh breezes with squalls of snow.
☽ —— 21.	47	37½	29,67	45½	39	62 58¾	190 19	North.	Do. with squalls of rain.
♂ —— 22.	48	35½	29,74	47	39	61 48	189 14	N.W. by W	Moderate with flying clouds.
☿ —— 23.	52	37	29,95	52	40	60 22¾	187 23	N. N. W.	Do.
♃ —— 24.	51	40	30,25	50	46½	59 18¾	189 15	South.	Fresh gales and hazy weather.
♀ —— 25.	50½	41½	30,00	50	45½	58 28½	191 9	S. S. E.	Strong gales and do.
♄ —— 26.	51	42	29,30	51	44½	58 28½	189 16	Do.	Moderate and hazy do.
☉ —— 27.	53	43	29,25	52	46	58 38½	189 44	Do.	Light breezes and fine do.
☽ —— 28	53½	43	29,41	53	46	58 4½	190 40	S. S. W.	Moderate breezes and hazy do
♂ —— 29.	51½	43½	29,69	51	50	57 0	192 22	Do.	Fresh breezes and squally do.
☿ —— 30.	52	43	29,75	52	47	56 31½	193 0	E. N. E.	Light do. and very fine do.
♃ Oct. 1.	52	43	29,77	51½	45	55 29⅓	193 6	W. by S.	Moderate do. and do.
♀ —— 2.	54	43	30,14	50½	44	54 5	192 52	N. N. W.	Do.

1778.	Therm. B. Greatest Height.	Therm. B. Least Height.	At Noon. Marine Barom.	At Noon. Therm. A.	At Noon. Therm. B.	At Noon. Latitude in.	At Noon. Longitude in.	Winds.	Weather and Remarks.
	°	°		°	°	° ′	° ′		
♄ Oct. 3.	52	43	30,47	50	44½	53 56 N	E	N. W.	Mod. breezes and fine weather.
☉ —— 4.	53	38	30,52	53	44½			S. E.	Do. and cloudy weather.
☽ —— 5.	55	40	30,40	55	45½			East.	Fresh breezes and do.
♂ —— 6.	53½	42	29,86	53	45½			Do.	Strong gales with much rain.
☿ —— 7.	55	43	29,53	55	45½			Variable.	Fresh gales and squally weath.
♃ —— 8.	56	44	29,46	56	46			S. W.	Mod. breezes with showers of rain.
♀ —— 9.	57	40	29,23	57	45½			E. N. E.	Moderate with much rain.
♄ —— 10.	55	38	29,30	54½	43			S. W. by S.	Fresh breezes with squalls & r.
☉ —— 11.	55	38	29,64	55	45			S.W. by W.	Do. with squalls of snow.
☽ —— 12.	50	39	29,81	48	45½			S. W. by S.	Mod. breezes and fine weather.
♂ —— 13.	57	38	30,05	54	45	In Samgonooda Harbour.		S. S. E.	Moderate with hazy do.
☿ —— 14.	53	37	30,12	52	43½	53 55¼	193 36	S. W. by S.	Do. and fine weather.
♃ —— 15.	51½	40	30,04	51	44			Variable.	Strong gales with squalls of r.
♀ —— 16.	56	42	29,40	55	49			S. S. W.	Do. and squally.
♄ —— 17.	54	41	29,60	54	46			N. W.	Light breezes and fine weather.
☉ —— 18.	52½	41	30,25	52	42			N. N. W.	Fresh gales and cloudy do.
☽ —— 19.	55	42	30,16	54¼	44			N. W.	Do. and squally.
♂ —— 20.	54	36	30,43	54	37½			N. N. W.	Do. and cloudy.
☿ —— 21.	51	38	30,50	49½	42½			S. W.	Mod. breezes and fine weather.
♃ —— 22.	51	40	30,18	51	43			S. E. by E.	Do. and cloudy.
♀ —— 23.	51	40	29,94	51	41			N. by W.	Do. and small rain.
♄ —— 24.	52½	38	30,45	52	41½			Variable.	Do. and cloudy weather.
☉ —— 25.	51	39	30,44	50	40			Do.	Light breezes and fine do.
☽ —— 26.	51½	38	30,00	48½	44	54 8	193 20	S. E.	Fresh gales and cloudy do.
♂ —— 27.	51	39	30,01	49½	43	54 0	191 17	S. W.	Strong gales and do.
☿ —— 28.	50½	40½	29,60	48	43	54 2	192 3	Do.	Do. and squally.
♃ —— 29.	48	37	29,05	46	41	53 52½	192 4	W. N. W.	Do. and cloudy.
♀ —— 30.	46	39	29,50	44½	39	54 0	193 35	W. by N.	Do. with squalls of snow.
♄ —— 31.	46½	38	30,40	45	43	52 3	194 48	S.W. by W.	Do. and squally.
☉ Nov. 1.	47½	42	30,11	46½	46	49 56	196 0	N. W.	Mod. breezes and fine weather.
☽ —— 2.	50	43	29,95	50	45	48 28	197 28	S. by W.	Strong gales with rain.
♂ —— 3.	49½	44	29,50	49	44	47 58½	198 34	W. by S.	Very strong gales and squally.
☿ —— 4.	49	42	29,92	48	47½	45 45	200 0	W. S. W.	Fresh gales and squally.
♃ —— 5.	54½	47	29,40	54	49	44 23	200 42	N. N. W.	Mod. breezes and cloudy weath.
♀ —— 6.	54½	47	30,23	53	51½	42 25	201 17	W. by N.	Moderate breezes and fine do.
♄ —— 7.	57½	53	30,25	57	56½	41 13	202 9	North.	Light breezes and cloudy do.
☉ —— 8.	60½	56½	30,21	58½	59	40 39	202 15	N. N. E.	Do.
☽ —— 9.	61½	57	30,17	61	59½	39 39	202 25	Do.	Light airs and variable.
♂ —— 10.	65	58	30,36	64	63	39 10½	203 7	South.	Mod. breezes and fair weather.
☿ —— 11.	67	63	30,48	66	66	38 38½	205 28	Do.	Fresh breezes and fine do.
♃ —— 12.	68½	65	30,31	68	67	38 12	206 49	N.W. by N.	Do. with rain.
♀ —— 13.	67	58½	30,33	63	61	36 10½	206 59	N. N. W.	Do. and cloudy weather.
♄ —— 14.	65	60	30,43	63½	63	34 51	207 13	Variable.	Gentle breezes and do.
☉ —— 15.	69	64	30,40	68	67½	33 34	207 26	E. by N.	Do. and flying clouds.

1778.	Therm. B. Greatest Height.	Therm. B. Least Height.	At Noon. Marine Barom.	Therm. A.	Therm. B.	Latitude in.	Longitude in.	Winds.	Weather and Remarks.
	°	°		°	°	° ′	° ′		
☽ Nov. 16.	70	65	30,35	69½	70	32 45 N	207 31 E	N. N. W.	Gentle breezes and flying clouds.
♂ —— 17.	74	68½	30,45	73	73½	32 28	207 17	S. E. by S.	Do.
☿ —— 18.	73	70	30,32	73	72½	32 9⅔	208 12	South.	Do. and fine weather.
♃ —— 19.	73½	71	30,15	73	72	32 38⅚	207 1	Do.	Fresh breezes and fine.
♀ —— 20.	70	62	30,17	68	65½	30 24½	207 1	N. by E.	Fresh gales open and cloudy.
♄ —— 21.	69	66	30,21	67½	72	27 51½	207 1	N. E.	Fresh breezes and fine do.
☉ —— 22.	73	66	30,31	69	72	26 7⅔	207 1	Variable.	Light breezes and fair do.
☽ —— 23.	72	70	30,30	72	72	24 47½	206 41	N. E.	Moderate breezes and fine do.
♂ —— 24.	76½	72	30,26	69	76	22 35½	206 15	Do.	Fresh breezes and hazy do.
☿ —— 25.	82	74	30,22	77½	78	21 17½	205 20	N. E. by E.	Do. and very fine weather.
♃ —— 26.	82	75	30,16	77	78½	21 1⅓	204 0	E. by N.	Mod. breezes and flying clouds.
♀ —— 27.	79	71	30,15	78	77½	21 1	204 9	E. by S.	Do. and very fine weather.
♄ —— 28.	78½	75	30,22	78	78	21 10	204 11	E. by N.	Fresh breezes and fine weather.
☉ —— 29.	78	75	30,37	77	76	21 8	204 21	Do.	Do.
☽ —— 30.	77½	73	30,21	77	76	20 59	204 37	E. by S.	Do.
♂ Dec. 1.	78	75	30,11	77	76	20 43	204 47	E. by N.	Mod. breezes and fine weather.
☿ —— 2.	77½	75	30,12	76½	77	20 17	205 15	Variable.	Light breezes and fair do.
♃ —— 3.	75½	75	30,11	74	75	20 20	205 18	E. by S.	Do. and cloudy.
♀ —— 4.	77	74	30,13	76	76	20 36	205 27	East.	Do. and hazy.
♄ —— 5.	78	73	30,11	75	77	20 22	205 10	E. by N.	Do. and fine.
☉ —— 6.	77½	74	30,16	77	77	20 8	204 53	E. N. E.	Do.
☽ —— 7.	78½	70	30,15	78	76	20 8	204 50	E. by N.	Do.
♂ —— 8.	76	71	30,34	73½	75	20 48	204 54	E. by S.	Mod. breezes with showers of rain.
☿ —— 9.	76	72	30,23	75	76	20 20	205 4	E. by N.	Do. and cloudy weather.
♃ —— 10.	77	73	30,24	76	75	20 27	205 14	East.	Do. with fine weather.
♀ —— 11.	75	71	30,09	75	73	20 15	205 27	Do.	Do.
♄ —— 12.	76	73	30,12	75	71	20 10	205 33	S. E. by E.	Do. with showers of rain.
☉ —— 13.	77	74	30,15	77	76	20 3	204 59	E. by S.	Light breezes with fine weath.
☽ —— 14.	78½	73	30,16	78	76	20 29	205 20	Do.	Moderate breezes and hazy.
♂ —— 15.	78½	74	30,17	78	78	20 27	205 2	Variable.	Do. with fine weather.
☿ —— 16.	80	75	30,24	79½	79	20 41	204 50	S. E.	Light airs and fine.
♃ —— 17.	78	74½	30,11	77	78	20 18	204 54	South.	Do.
♀ —— 18.	78	69	30,20	76	78	19 59	204 56	N. W.	Moderate and do.
♄ —— 19.	75½	72	30,21	75	75	19 45	205 10	E. by S.	Do.
☉ —— 20.	77	74	30,18	76	76	19 45	205 14	East.	Do. and cloudy weather.
☽ —— 21.	77½	73¾	30,14	77	76	19 53	205 4	E. by S.	Do. and fine do.
♂ —— 22.	77½	72	30,26	76	77½	20 29	205 10	E. by N.	Do.
☿ —— 23.	77½	72	30,20	77	74	20 4	205 6	N. E.	Moderate and fine.
♃ —— 24.	78½	70	30,12	78	72	20 13	204 47	E. N. E.	Fresh breezes and fine weather.
♀ —— 25.	74	70	30,13	74	74	20 22	204 40	Do.	Moderate and very fine do.
♄ —— 26.	73	69	30,12	71½	70	20 27⅔	204 51	Do.	Do.
☉ —— 27.	72	67	30,18	72	68½	20 46	204 52	E. S. E.	Fresh breezes with squalls of rain.
☽ —— 28.	73	68½	30,10	72	72½	20 23	205 16	Variable.	Moderate and fair weather.
♂ —— 29.	75	70	30,13	74½	74	20 13	205 30	N. E. by E.	Do. and cloudy weather.

1778.	Therm. B. Greatest Height.	Therm. B. Least Height.	At Noon. Marine Barom.	At Noon. Therm. A.	At Noon. Therm. B.	At Noon. Latitude in.	At Noon. Longitude in.	Winds.	Weather and Remarks.
	°	°		°	°	° ′	° ′		
☿ Dec. 30.	76	71	29,98	75½	72¼	20 2 N	205 30 E	N. E. by N.	Light breezes with rain.
♃ —— 31.	79	71½	30,03	76	78	20 7	206 21	S. by E.	Moderate breezes with rain.
1779.									
♀ Jan. 1.	77½	70¾	30,09	76½	77	20 9	206 45	S. S. E.	Moderate with flying clouds.
♄ —— 2.	77	73	30,07	77	77	20 1	206 36	S. by E.	Light breezes and hazy.
☉ —— 3.	79	73	30,13	77	78½	20 10¼	206 36	E. by S.	Gentle breezes and fair.
☽ —— 4.	78½	73	30,19	76	78	19 26	205 58	East.	Do.
♂ —— 5.	78	72	30,20	74	77	19 20	205 1¼	N. E.	Do.
☿ —— 6.	76½	72	30,20	74	75½	18 59	204 15	E. N. E.	Fresh breezes and fine.
♃ —— 7.	77½	73	30,17	76½	77	19 3¼	204 0	Variable.	Variable winds and hazy.
♀ —— 8.	78	72	30,15	76½	77½	19 0⅓	203 46	E. by N.	Moderate and fine.
♄ —— 9.	76	72	30,11	75½	70	18 48	204 22	E. N. E.	Do. with small rain.
☉ —— 10.	75	71	29,92	74½	69	18 43	204 27	W. by N.	Fresh breezes with rain.
☽ —— 11.	74	70	29,80	73	73½	18 54	204 29	West.	Moderate and fair.
♂ —— 12.	75	72	30,00	74½	77	18 32	204 16	South.	Light airs and fine.
☿ —— 13.	78	73	30,06	74½	78	18 56¼	204 12	S. E.	Light breezes and fine.
♃ —— 14.	77	72	30,11	76	74	19 1	204 6	N. W.	Light airs with squalls of rain.
♀ —— 15.	78	73	30,14	76	78			Variable.	Light airs and fair.
♄ —— 16.	82	72	30,16	78	81½			S. S. E.	Do.
☉ —— 17.	79	74	30,16	78	78			S. W.	Gentle breezes and fine.
☽ —— 18.	79½	75	30,19	79	79½			N. E.	Do.
♂ —— 19.	83	74	30,14	82	82½			S. E.	Do.
☿ —— 20.	84	75	30,17	86	83½			E. by N.	Do.
♃ —— 21.	88	72	30,14	88	83			We had constantly land and sea breezes, viz. At about N. N. E. in the morning, and S. W. in the evening.	During my residence on shore we had only one shower of rain at the Bay, though it rained almost every day on the hills.
♀ —— 22.	87	74	30,12	86	82				
♄ —— 23.	82	70	30,15	81	80				
☉ —— 24.	82	71	30,22	81	82	At the island of Oeyhee, on shore at Keragegooa Bay.			
☽ —— 25.	81	72	30,21	80½	78				
♂ —— 26.	86	73	30,16	85	82¼				
☿ —— 27.	81½	74	30,18	80½	78¼	19 28⅙	203 55		
♃ —— 28.	82	74	30,22	82	80				The morning part was generally clear, and the afternoon cloudy.
♀ —— 29.	84	72	30,21	84	78				
♄ —— 30.	87	70	30,22	86½	83				
☉ —— 31.	81	72	30,20	81	77				
☽ Feb. 1.	87	76	30,14	86½	81				
♂ —— 2.	83	74	30,09	82	80				
☿ —— 3.	80	75	30,10	79	77				
♃ —— 4.	79	74	30,11	78	78	19 30	203 50	South.	Light breezes and fine.
♀ —— 5.	79½	72	30,14	77½	78¼	19 33	203 56	S. S. W.	Do.
♄ —— 6.	78	74	30,07	76½	77	19 53	203 20	South.	Light breezes and hazy.
☉ —— 7.	76	73	30,10	75	74	20 15	203 40	E. N. E.	Strong gales and hazy.
☽ —— 8.	75	73	30,05	75	73½	20 14	203 50	N. E.	Do. and squally.
♂ —— 9.	78	72	29,95	75	74	20 8	203 54	Variable.	Squally and cloudy.
☿ —— 10.	75	72	29,90	74½	73	At Keragegooa Bay.			

1779.	Therm. B. Greatest Height.	Therm. B. Least Height	At Noon. Marine Barom.	Therm. A.	Therm. B.	Latitude in.	Longitude in.	Winds.	Weather and Remarks.
	°	°		°	°	° ′	° ′		
♃ Feb. 11.	76½	71	29,92	75½	77	At Keragegooa Bay.		S. by E.	Moderate and fair weather.
♀ —— 12.	80	73	30,03	77	79			N. W.	Do. and hazy.
♄ —— 13.	79	72	30,09	78	76			E. N. E.	Do. and fine.
☉ —— 14.	79	73	30,11	78½	77			East.	Do.
☽ —— 15.	78	74	30,14	77½	76½			N. W.	Moderate and fine.
♂ —— 16.	78	73	30,22	77½	77½			S. W.	
☿ —— 17.	77	73	30,21	76	74			W. N. W.	Do.
♃ —— 18.	78	72	30,20	77	73½			West.	
♀ —— 19.	76	73	30,23	74	75			Variable.	
♄ —— 20.	77	71½	30,24	76	76			W. by S.	
☉ —— 21.	77	73	30,17	76	76½			Do.	
☽ —— 22.	78	71½	30,17	77	77½			Do.	
♂ —— 23.	78½	71	30,15	77½	77½	19 51 N	203 36 E	N. E. by E.	Moderate and fair.
☿ —— 24.	78	72	30,16	75	75	20 41	203 8	E. N. E.	Fresh breezes and fine.
♃ —— 25.	77½	71	30,17	76½	76	20 41⅓	203 0	N. E. by E.	Gentle breezes and fine.
♀ —— 26.	78	72	30,21	76	77	21 6	202 27	S. E.	Moderate and cloudy.
♄ —— 27.	78	71½	30,15	75½	75	21 47	201 14	N. E. by E.	Do. and hazy.
☉ —— 28.	77	72	30,17	74	75½	22 9	201 5	Variable.	Do.
☽ Mar. 1.	77	73	30,19	77	77	21 5	200 54	E. N. E.	Do. and fine.
♂ —— 2.	77	74	[illegible]	77	76	At Ohimea Road at Atowooi.		N. E. by E.	Do.
☿ —— 3.	77½	74	30,28	77	76			Do.	Do.
♃ —— 4.	78	73	30,29	77½	76			Do.	Fresh breezes and fair.
♀ —— 5.	79	74½	30,26	78	78½			E. N. E.	Do.
♄ —— 6.	77	74	30,16	76	76½			Do.	Do. and small rain.
☉ —— 7.	76½	72	30,16	76	74			East.	Do. and fair.
☽ —— 8.	76	73	30,10	74	73	21 56½	200 24	Variable.	Moderate and fair.
♂ —— 9.	77	73	30,14	76	74			E. by N.	Fresh breezes and fair.
☿ —— 10.	76	72½	30,16	75	73½			E. by S.	Do. and hazy weather.
♃ —— 11.	76½	72	30,20	76	73			East.	Do. and fair weather.
♀ —— 12.	76	73	30,20	76	74			E. N. E.	Moderate and fine.
♄ —— 13.	77	72	30,24	77	74½			E. S. E.	Do. with showers of rain.
☉ —— 14.	78	72½	30,20	78	73½			S. by E.	Do. and fine weather.
☽ —— 15.	76½	73	30,15	75½	75	21 48	199 30	E. by N.	Light winds and fair.
♂ —— 16.	76	71½	30,17	74	74	21 34	198 40	Variable.	Mod. breezes and fine weather.
☿ —— 17.	76½	72	30,20	76	75½	21 18	196 48	East.	Do.
♃ —— 18.	77½	73	30,21	76	77	21 15	195 19	E. by N.	Do.
♀ —— 19.	77	72½	30,16	77	74½	21 12	194 12	E. N. E.	Light breezes and do.
♄ —— 20.	76½	72	30,12	76	75½	20 54	193 25	N. E. by N.	Do.
☉ —— 21.	78	73	30,21	76	77½	20 39	192 12	East.	Moderate breezes and fair.
☽ —— 22.	78	74	30,24	77	78	20 29½	190 51	Do.	Do.
♂ —— 23.	77½	73½	30,23	76	74	19 59½	188 42	N. E.	Fresh gales and squally weath.
☿ —— 24.	78	73	30,21	76	77	19 54	186 10	E. N. E.	Fresh breezes and fair.
♃ —— 25.	79	75	30,18	78	79	19 58½	184 25	Do.	Moderate breezes and cloudy.
♀ —— 26.	81	75	30,16	61	79½	19 51	183 15	E. S. E.	Do.

1779.	Therm. B. Greatest Height.	Therm. B. Least Height.	At Noon. Marine Barom.	Therm. A.	Therm. B.	Latitude in.	Longitude in.	Winds.	Weather and Remarks.
	°	°		°	°	° ′	° ′		
♄ Mar. 27.	81	76½	30,10	79	81	19 51 N	182 20 E	E. N. E.	Mod. breezes and fine weather.
☉ —— 28.	81	76	30,06	80½	79½	20 4	181 27	E. by N.	Do.
☽ —— 29.	81½	76½	30,00	81	80	20 17	180 49	E. S. E.	Light breezes and fair.
♂ —— 30.	80½	75	30,00	80	79	20 20	180 28	E. S. E.	Moderate do. and do.
☿ —— 31.	83	76	30,07	81	83	20 38	180 1	Variable.	Light airs and fine.
♃ April 1.	82½	76½	30,10	82	79½	21 17	179 29	E. N. E.	Moderate with squalls of rain.
♀ —— 2.	79	73	30,20	77½	74	22 39	177 37	N. E.	Fresh gales and cloudy.
♄ —— 3.	77	73½	30,21	76½	74½	24 39	175 26	N. E. by N.	Do. and hazy.
☉ —— 4.	76½	72½	30,30	76	75	26 17	173 37	E. N. E.	Do. with small rain.
☽ —— 5.	74½	70	30,12	73	70½	28 22	171 17	East.	Strong gales and squally.
♂ —— 6.	72	69	29,98	72	67	29 49	169 57	N. N. W.	Do. with thick rain.
☿ —— 7.	67	58	30,24	66	60	30 5	168 21	N. by W.	Moderate breezes with rain.
♃ —— 8.	66	58	30,46	65	61	30 39	167 01	N. E.	Do. and flying clouds.
♀ —— 9.	66½	62	30,42	66	66	32 17	166 42	S. E. by S.	Moderate and hazy.
♄ —— 10.	66½	59	30,42	66	62½	33 33	166 12	E. N. E.	Do. and cloudy.
☉ —— 11.	67	61½	29,94	67	61½	35 34	165 57	S. W.	Strong gales with rain.
☽ —— 12.	60	50	30,42	57½	50	37 9½	165 10	Variable.	Fresh gales and cloudy.
♂ —— 13.	53	44½	30,33	52	48½	39 23	164 9	E. by N.	Strong gales with rain.
☿ —— 14.	53	41	29,94	52½	44½	40 45	163 23	E. N. E.	Do.
♃ —— 15.	51	39	30,30	50½	41½	41 49	161 21	N. by E.	Moderate and cloudy.
♀ —— 16.	53	39	30,36	53	43	42 12½	160 11	North.	Light airs and hazy.
♄ —— 17.	53½	39	30,31	53	42	43 18	160 4	E. S. E.	Moderate and hazy.
☉ —— 18.	54½	34½	29,67	52	34½	46 8½	160 30	S. W.	Strong gales with snow.
☽ —— 19.	43½	29	29,80	43	35	48 40	161 4	Do.	Moderate gales with do.
♂ —— 20.	43	29½	29,83	41	32	49 47	161 20	N. W.	Do. and fair weather.
☿ —— 21.	45½	31	30,05	45	34½	50 25	162 7	N. E.	Do.
♃ —— 22.	50	30	30,16	50	30	51 36	160 29	N. E. by N.	Do. and thick hazy.
♀ —— 23.	48	30	30,17	47½	31	51 56	169 56	N. E.	Do. and very hazy.
♄ —— 24.	47½	30	30,13	47	30	52 2	160 6	N. E. by N.	Fresh gales and hazy.
☉ —— 25.	41½	30	30,55	39	30	52 22	159 50	Variable.	Moderate gales and snowy.
☽ —— 26.	45	30	29,90	41	30	52 22	160 2	N. E.	Strong gales with snow.
♂ —— 27.	49	30	30,20	49	32	52 12	160 23	Do.	Moderate gales and much snow.
☿ —— 28.	50	29½	30,11	49½	30½	52 23	159 15	N. W. by N.	Light breezes and fine.
♃ —— 29.	49½	29½	30,05	49	34	52 35	159 25	W. S. W.	Do. and hazy.
♀ —— 30.	50	31	30,11	49	41	52 48	159 6	S. E.	Light breezes and fine.
♄ May 1.	49½	31	30,11	49	33½	52 59½		S. E. by S.	Moderate breezes and hazy.
☉ —— 2.	49	31½	29,76	44½	33	In the harbour of St. Peter and Paul at Kamtschatka.		S. S. E.	Fresh breezes with snow.
☽ —— 3.	49	33	29,71	49	41			Variable.	Do. and fair.
♂ —— 4.	49	31	30,16	49	44			S. E. by S.	Moderate breezes and very fine.
☿ —— 5.	51	31½	30,17	51	35			S. E.	Fresh breezes and cloudy.
♃ —— 6.	59	33	29,98	58	37			N. E.	Do. with snow.
♀ —— 7.	53	34	29,85	52	38½			E. N. E.	Moderate and cloudy.
♄ —— 8.	50	35	30,07	48	37½			E. by N.	Do. and fair.
☉ —— 9.	51½	36	30,07	57	38½			N. E.	Do. and cloudy.

1778.	Therm. B. Greatest Height.	Therm. B. Least Height.	At Noon. Marine Barom.	Therm. A.	Therm. B.	Latitude in.	Longitude in.	Winds.	Weather and Remarks.
	°	°		°	°	° ′	° ′		
☽ May 10.	51	34	29,82	50	37			North.	Fresh gales and hazy weather.
♂ —— 11.	47	35	29,96	46	42½			E. by S.	Light breezes and hazy.
☿ —— 12.	46½	40	29,97	45	42			N. N. W.	Light breezes and fine.
♃ —— 13.	45½	39	29,96	45	44			South.	Do.
♀ —— 14.	58	43	29,98	58	54			Variable.	Do.
♄ —— 15.	47	34	30,14	47	44			S. S. E.	Do. and foggy all day.
☉ —— 16.	51	40	30,22	50½	48			Do.	Moderate breezes and foggy.
☽ —— 17.	49	34	30,25	49	44			South.	Fresh breezes, dull and cloudy.
♂ —— 18.	43	40	29,80	42	42			Do.	Do. and foggy.
☿ —— 19.	54	43	29,95	54	44½			W. N. W.	Light airs, dull and cloudy.
♃ —— 20.	53	34	29,90	47	53			S. S. E.	Moderate breezes and fine.
♀ —— 21.	54	40	29,86	54	42			S. E.	Light breezes and fine.
♄ —— 22.	53	40	29,83	53	45			Do.	Moderate and fine.
☉ —— 23.	46	40½	30,04	44	41			E. by S.	Light airs and fine.
☽ —— 24.	46½	40	30,06	46	42	In the harbour of		E. S. E.	Moderate breezes and foggy.
♂ —— 25.	45	40½	30,05	45	42	St. Peter and Paul		S. S. E.	Do. dull and cloudy.
☿ —— 26.	50	40½	30,19	50	44	at Kamtschatka.		Do.	Do.
♃ —— 27.	45	39	29,95	44	42			Variable.	Do.
♀ —— 28.	50	40½	29,95	50	43	53 1½ N	158 42 E.	S. E.	Morn. part foggy, aftern. fine.
♄ —— 29.	46½	41	30,08	46	43			S. S. E.	Do. and cloudy.
☉ —— 30.	55	40	29,77	54½	46			S. E. by E.	Do. and flying clouds.
☽ —— 31.	57	43	29,90	57	57			N. W.	Fresh gales and fine.
♂ June 1.	53	42	30,08	53	47			S. E.	Fresh gales, hazy and thick.
☿ —— 2.	46	43	30,16	45½	43			S. E. by E.	Do. and hazy.
♃ —— 3.	54	41	30,12	54	46			N. W.	Moderate and hazy.
♀ —— 4.	43	40	30,06	41½	41½			N. E.	Strong gales with rain, snow, & fleet.
♄ —— 5.	43	37	30,01	43	43			East.	Moderate with small rain.
☉ —— 6.	49½	40	29,76	49½	45			S. E. by E.	Do. and rainy.
☽ —— 7.	46	41	29,81	45	45			E. S. E.	Do. with much rain.
♂ —— 8.	48½	43	29,87	48	47			Variable.	Light breezes and flying clouds.
☿ —— 9.	49½	42	29,91	49	44			S. E.	Brisk breezes with fleet.
♃ —— 10.	55	42	29,92	53	43			S. E. by S.	Moderate do. and much rain.
♀ —— 11.	57	41½	29,94	57	44			N. E. by E.	Fresh breezes and small rain.
♄ —— 12.	57½	40	30,04	57	42			S. E. by E.	Moderate and fine weather.
☉ —— 13.	54	40	29,80	53	42			S. E.	Do.
☽ —— 14.	58	41	29,60	58	39½			S. E. by E.	Do. and foggy.
♂ —— 15.	58	40	29,57	57	40½			E. by S.	Fresh breezes and foggy.
☿ —— 16.	53	44	29,21	53	48½	52 49	158 50	E. S.	Light airs and fine.
♃ —— 17.	53½	40	29,74	53	45	52 48	159 11	E. S. E.	Do. and fair.
♀ —— 18.	53	40	29,92	53	43	52 45	159 46	South.	Moderate breezes and hazy.
♄ —— 19.	53	37½	29,95	53	43	54 0	161 30	S. W. by S.	Do. with thick foggy weather.
☉ —— 20.	55	39	29,97	55	41	54 57	163 11	S. S. W.	Do.
☽ —— 21.	56	41	30,03	58	48	55 52	164 3	W. N. W.	Light breezes and fine.
♂ —— 22.	50	40	29,75	50	48½	57 0	164 49	N. W.	Light airs, dull and cloudy.

1779.	Therm. B. Greatest Height.	Therm. B. Least Height.	At Noon. Marine Barom.	Therm. A.	Therm. B.	Latitude in.	Longitude in.	Winds.	Weather and Remarks.
	°	°		°	°	° ′	° ′		
☿ June 23.	50	42	30,03	50	45	57 32 N	165 46 E	S. E.	Light airs and foggy weather.
♃ —— 24.	47	40	29,92	47	46	58 23	167 16	S. S. W.	Gentle breezes and fair.
♀ —— 25.	48½	43	30,06	47	48	59 10	168 29	Do.	Do. and fine weather.
♄ —— 26.	46	39	30,07	46	41	59 26	171 27	Do.	Fresh breezes and thick hazy weath
☉ —— 27.	50	37	29,96	50	41	59 56	175 29	West.	Do. with thick fog.
☽ —— 28.	53½	42	29,60	53½	49	61 56	175 44	W. S. W	Moderate and cloudy weather.
♂ —— 29.	57	43	29,43	57	43	62 4	178 26	N. by E.	Do. and small rain.
☿ —— 30.	49	40	29,71	45	44	61 52	180 19	W. S. W.	Light breezes and fine weather.
♃ July 1.	56	40	29,72	55½	44½	62 9	181 12	Variable.	Light variable wind and foggy
♀ —— 2.	54½	35	29,82	54½	43½	62 44	182 52	S. E.	Do.
♄ —— 3.	48	35½	30,09	48	40	63 38	186 55	S. E. by E.	Moderate and cloudy weather.
☉ —— 4.	55	38	30,16	55	38½	64 23	188 45	S. by E.	Light breezes and thick fog.
☽ —— 5.	48	37	30,07	48	39	65 20	189 36	S. by W.	Do. and dull cloudy weather.
♂ —— 6.	48	37	29,87	48	38½	67 7	191 16	S. S. E.	Do.
☿ —— 7.	47	36½	29,67	47	36½	68 19	193 38	S. by E.	Moderate with small rain.
♃ —— 8.	45	30½	29,71	45	32	69 23	194 0	N. by E.	Do. with snow and sleet.
♀ —— 9.	40	29	29,44	40	30	69 12	191 10	N. W.	Do. with much snow.
♄ —— 10.	48	28½	29,52	48	35	68 3	189 3	NW. by W.	Light winds and hazy weather
☉ —— 11.	44	32	29,46	44	35	67 52	189 25	E. by N.	Do. and hazy with snow.
☽ —— 12.	43½	34½	29,18	43	35½	68 47	189 10	N. W.	Moderate breezes with rain.
♂ —— 13.	44	30½	29,78	43	38½	69 26	188 15	E. by S.	Light winds and fine weather.
☿ —— 14.	42	33½	29,67	42	38½	69 37	188 48	S. E. by S.	Do.
♃ —— 15.	43	32½	29,55	43	33	69 35	190 19	W. N. W.	Do. and hazy weather.
♀ —— 16.	45	31	29,60	45	33	69 50	193 19	S. W.	Strong gales and hazy weather.
♄ —— 17.	40	32½	29,50	40	35	69 56	195 15	W. S. W.	Moderate breezes and dull do.
☉ —— 18.	43	33	29,80	43	33½	70 28½	195 22	N. E.	Moderate and fine weather.
☽ —— 19.	40	30½	29,91	40	53½	70 16½	197 6	N. N. E.	Light breezes and hazy do.
♂ —— 20.	42½	35½	29,90	42	35½	69 39	195 4	E. S. E.	Do. with small rain.
☿ —— 21.	47	40	29,70	47	43	69 40	193 9	N. E. by E.	Mod. and dull cloudy weather.
♃ —— 22.	47	40½	29,46	47	42½	69 33	188 33	East.	Do. and fair.
♀ —— 23.	48½	37	29,40	48	36	69 13	187 22		Do. and hazy.
♄ —— 24.	45	34	29,12	44	37	68 55	188 35	S. by W.	Do.
☉ —— 25.	49	35½	29,97	49	36½	68 40	190 3	Do.	Fresh breezes and hazy weather
☽ —— 26.	47½	38	29,78	47	38½	68 0	188 25	S. E.	Do. and cloudy.
♂ —— 27.	53	34	29,80	53	34½	67 30	188 37	Do.	Do.
☿ —— 28.	55	38	29,86	55	40½	67 9½	190 0	S. E. by E.	Mod. breezes and fine weather.
♃ —— 29.	55	38	29,80	55	42	66 51	190 52	S. E.	Do. and fair.
♀ —— 30.	49	38	29,60	49	42	61 22	191 20	N. W.	Do. and foggy weather.
♄ —— 31.	48	37	29,82	48	40½	65 9	189 27	Do.	Do. and cloudy.
☉ Aug. 1.	45	35	29,79	45	40	64 25	189 43	Variable.	Light breezes and fine weather.
☽ —— 2.	44	36	29,73	44	47	64 0½	190 5	S. S. E.	Do. and dull cloudy do.
♂ —— 3.	51	40	29,61	51	41	64 6	189 19	S. by W.	Light airs and do.
☿ —— 4.	51½	37	29,57	51	42	64 7	187 40	E. S. E.	Fresh breezes and cloudy wea
♃ —— 5.	54	41	29,46	54	42½	62 32	186 18	N. W.	Do. and rainy.

1779.	Therm. B Greatest Height.	Therm. B Least Height.	At Noon. Marine Barom.	Therm. A.	Therm. B.	Latitude in.	Longitude in.	Winds.	Weather and Remarks.
	°	°		°	°	° ′	° ′		
♀ Aug. 6.	48½	38	29,75	48	43	60 55 N	184 54 E	West.	Mod. with dull rainy weather.
♄ —— 7.	55	42	30,14	55	45	59 38	183 20	Do.	Do. and very fine.
☉ —— 8.	55	44	29,50	55	46	59 4	180 48	E. S. E.	Strong gales with rain.
☽ —— 9.	57	45	28,95	57	47½	58 51	177 5	S. S. W.	Fresh gales and thick weather.
♂ —— 10.	56	46	28,94	56	48	58 28	174 18	N. N. W.	Mod. breezes and hazy do.
☿ —— 11.	55	46½	29,15	55	50	57 25	172 33	Variable.	Do. and hazy.
♃ —— 12.	57	48½	29,40	57	50	56 30	171 46	West.	Do.
♀ —— 13.	59½	47	29,77	59½	51	55 25	170 37	S.W. by W.	Light breezes and fine weather.
♄ —— 14.	59½	45	29,93	58	48½	54 51¼	171 19	W. S. W.	Do. and hazy.
☉ —— 15.	58	46	29,96	58	47	54 3	171 12	S. W.	Mod. and dull hazy weather.
☽ —— 16.	56½	46	29,84	56½	50	54 23	170 32	N. W.	Do. with small rain.
♂ —— 17.	55	48	30,02	55	51	53 50	168 11	W. N. W.	Do. and fine.
☿ —— 18.	56	49½	30,05	56	50½	52 43	167 45	W. S.W.	Do. with hazy weather.
♃ —— 19.	55½	48	29,66	55	48½	52 43	165 13	East.	Strong gales with rain.
♀ —— 20.	57	49	30,03	57	52	53 4	163 0	S. W.	Moderate and cloudy.
♄ —— 21.	57	49	29,90	59	57	53 47	161 50	Do.	Light airs and hazy weather.
☉ —— 22.	60	54½	29,07	60	55½	53 8	160 55	S. W. by S.	Do. and fair.
☽ —— 23.	60	51	29,92	60	56	52 50	160 18	Variable.	Moderate and hazy.
♂ —— 24.	58	53	30,13	57½	57			N. W. by N.	Light airs and fair weather.
☿ —— 25.	61	49	30,10	60	61			E. S. E.	Do. and very fine weather.
♃ —— 26.	60	50	30,11	58	59			S. W.	Moderate with fine weather.
♀ —— 27.	59	51	30,07	57	59			S. E. by E.	Fresh gales and thick hazy do.
♄ —— 28.	54	51½	30,12	53	53			Variable.	Moderate and hazy do.
☉ —— 29.	59	52	30,13	57½	58½			S. W.	Do. and dull cloudy do.
☽ —— 30.	58½	56	30,19	56½	57			N. E.	Fresh gales with small rain.
♂ —— 31.	54	50	30,27	53	53½			N. N. E.	Moderate with dull weather.
☿ Sept. 1.	62	50	30,28	61½	60			North.	Do.
♃ —— 2.	64	52½	30,17	62½	64			S. E.	Moderate and fine weather.
♀ —— 3.	62½	50	30,16	61	62			S. E. by S.	Do. and fine.
♄ —— 4.	57	50	30,11	57	65	On shore at St. Peter and Paul at Kamtschatka.		S. E. E.	Fresh breezes and hazy weath.
☉ —— 5.	64½	48	30,14	66	64			N. W.	Fresh gales and fine.
☽ —— 6.	58½	47	29,98	58	57			NW. by W.	Do.
♂ —— 7.	65	49	29,92	63	65			N. W.	Fresh breezes and do.
☿ —— 8.	64½	44	29,98	64	62			Variable.	Do. and very fine do.
♃ —— 9.	59	46	30,14	56	57½			S. E.	Moderate and dull cloudy weather.
♀ —— 10.	55	45	30,11	53	52			E. by S.	Do. with heavy cloudy do.
♄ —— 11.	54½	42	30,01	54	53½			N. E. by E.	Strong gales and cloudy.
☉ —— 12.	54	42	29,72	54	53½			N. E. ½ E.	Do. with much rain.
☽ —— 13.	54	42½	29,42	53½	53			E. N. E.	Fresh gales with do.
♂ —— 14.	53½	45	29,46	51	52			Variable.	Do. with small rain all day.
☿ —— 15.	52	42	29,36	51	51			S. E. by E.	Strong gales with much rain.
♃ —— 16.	62	44	29,37	59	61			S. E.	Light breezes and fine weather.
♀ —— 17.	57	46	29,43	56	57			S. S. W.	Moderate and hazy do.
♄ —— 18.	53	44	29,42	50½	50			E. by S.	Moderate with much rain.

1779.	Therm. B. Greatest Height.	Therm. B. Least Height.	At Noon. Marine Barom.	At Noon. Therm. A.	At Noon. Therm. B.	At Noon. Latitude in.	At Noon. Longitude in.	Winds.	Weather and Remarks.
	°	°		°	°	° ′	° ′		
☉ Sept. 19.	61	43	29,32	60½	58			N. E. by E.	Moderate with flying clouds.
☽ —— 20.	58	44	29,92	56	55			E. N. E.	Do. with rain.
♂ —— 21.	51½	43	29,78	49	48½			N. E. by E.	Do. with flying clouds and rain.
☿ —— 22.	60½	44	29,25	55½	60½			North.	Light breezes and fine weather.
♃ —— 23.	55	40	29,14	53	50½			S. W.	Do.
♀ —— 24.	57	41	29,98	56	52			N. N. W.	Moderate and do.
♄ —— 25.	58	42	30,28	57	51½			Variable.	Do.
☉ —— 26.	57	41½	30,33	56	52½			N. W. by W.	Do.
☽ —— 27.	54	42	30,19	54	52	In the harbour of		W. by S.	Do.
♂ —— 28.	52½	43	30,14	51	51	St. Peter and Paul		West.	Do. and cloudy.
☿ —— 29.	57	42	30,15	52½	56	At Kamtschatka.		Do.	Do. and hazy weather.
♃ —— 30.	55	41	30,17	51	54			S. E.	Fresh gales and thick hazy w.
♀ Oct. 1.	49	40	29,96	47	46			S. S. W.	Do. and cloudy with some rain.
♄ —— 2.	54	43	30,19	54	52			W. S. W.	Fresh breezes with rain.
☉ —— 3.	60	47	29,82	60	58			W. N. W.	Moderate and fine weather.
☽ —— 4.	57	44	29,84	56	56			W. by N.	Light breezes and do.
♂ —— 5.	57½	40	29,87	57½	55			Variable.	Moderate and do.
☿ —— 6.	60	43	29,57	59	49½			N. E.	Fresh gales and much rain.
♃ —— 7.	58	44	29,45	57	46			N. W.	Do. and fair weather.
The foregoing Observations were made on board the Discovery.									
The following on board the Resolution.									
♀ —— 8.	50	40	29,81	49	42			North.	Fresh breezes and fair weather.
♄ —— 9.	54	41	29,81	52	43½			S. W. by S.	Moderate with small rain.
☉ —— 10.	56	40	29,78	54	53	52 36 N	158 42 E	S. E.	Light breezes and fine weather.
☽ —— 11.	53	45	29,93	53	47	52 4	158 30	North.	Do. and cloudy.
♂ —— 12.	55	42	29,86	54	45	51 0	157 20	N. N. E.	Do. and fine weather.
☿ —— 13.	53	40	29,55	49	42½	49 48	156 47	West.	Do.
♃ —— 14.	51	40	29,80	49	43	48 16	155 32	W. N. W.	Fresh breezes and do.
♀ —— 15.	51	41½	30,09	50	44	46 30	155 36	Variable.	Do.
♄ —— 16.	55	43	30,15	54	43½	45 24	155 38	W. N. W.	Light winds and do.
☉ —— 17.	54	42	30,14	53	46½	45 7	153 48	N. by W.	Do.
☽ —— 18.	57	42½	30,26	53	50	44 27	152 55	South.	Do. and hazy.
♂ —— 19.	54	42	29,50	53	50	44 14	150 46	S. E.	Strong gales and thick rain.
☿ —— 20.	53½	45½	29,37	53	49	43 40	150 31	Do.	Moderate with rain.
♃ —— 21.	51	43	29,92	50	45	42 41½	149 41	W. N. W.	Strong gales and fair weather.
♀ —— 22.	51	43½	30,15	50½	45	40 58½	148 6	N W. by W.	Moderate gales and do.
♄ —— 23.	56	44	30,36	54	45½	40 34⅓	146 40	S. S. W.	Fresh breezes and hazy weath.
☉ —— 24.	63	50	29,96	63	59	40 45	145 30	S. W.	Do. with rain.
☽ —— 25.	59	52½	30,00	58	52	40 23	143 54	N. N. E.	Do. and cloudy with rain.
♂ —— 26.	63	51	30,02	60	62	40 4	142 14	N. W.	Light breezes and fine weather.
☿ —— 27.	62½	59	30,15	62	59	39 16½	142 59	N. by E.	Do.
♃ —— 28.	64½	57	30,14	64	61	38 13	141 54	S. E.	Do. and fair.
♀ —— 29.	67	60	30,11	66½	64	37 44	141 25	S. by E.	Strong gales with rainy weather.

1779.	Therm. B. Greatest Height.	Therm. B. Least Height.	At Noon. Marine Barom.	Therm. A.	Therm. B.	Latitude in.	Longitude in.	Winds.	Weather and Remarks.
	°	°		°	°	° ′	° ′		
♄ Oct. 30.	63	58	29,93	62	59	36 41 N	142 0 E	Variable.	Fresh gales and fine weather.
☉ —— 31.	66	60	30,10	65	62	35 33	142 4	W. N. W.	Do.
☽ Nov. 1.	69½	62	30,35	68	69	35 16	141 29	S. E.	Moderate breezes and fine.
♂ —— 2.	71½	63	30,29	71	71	35 43	141 8	S. S. E.	Fresh gales and hazy weather.
☿ —— 3.	73½	70	30,02	73	73	36 28	144 40	South.	Strong gales and do.
♃ —— 4.	74	68	29,85	73	72	35 48	146 25	S.W. by S.	Mod. with showers of rain.
♀ —— 5.	72½	68	29,86	72	70	35 14	147 4	Variable.	Do.
♄ —— 6.	71	65	30,18	69½	67	35 0⅔	147 30	North.	Do. and cloudy weather.
☉ —— 7.	71½	68	30,19	70	71	33 50¾	148 27	S.W. by W.	Moderate and fine.
☽ —— 8.	71½	68	30,14	71	69	33 11	148 8	E. N. E.	Do. with dull cloudy weather.
♂ —— 9.	72	66½	29,78	71½	68	31 45	145 57	N.E. by N.	Fresh gales and rain.
☿ —— 10.	72	67½	29,68	71½	69	30 32	144 47	Do.	Do.
♃ —— 11.	72½	64	29,80	72	71	29 4	144 2	Do.	Do.
♀ —— 12.	73	67	29,40	72½	71	27 30	144 17	N. N. E.	Strong gales with much rain.
♄ —— 13.	73	70	29,81	72½	72	25 54	143 7	N.W. by W.	Fresh gales and fair.
☉ —— 14.	76	70½	30,05	73	75	24 35	142 2	North.	Moderate and fair weather.
☽ —— 15.	77	69	30,18	75	76	24 50	141 8	Variable.	Do.
♂ —— 16.	82	72	30,15	78	81½	25 6	138 52	S. E.	Do.
☿ —— 17.	80	75	30,18	76	76	24 44	137 46	N. N. W.	Moderate and a little hazy.
♃ —— 18.	75	71	30,31	73	74	23 46	135 22	N.E. by N.	Fresh breezes and hazy.
♀ —— 19.	77	72½	30,34	76	76	22 48½	133 21	N. E. by E.	Do. with flying clouds.
♄ —— 20.	79	74	30,24	78½	80½	22 4¾	130 59	E. N. E.	Do.
☉ —— 21.	81	77½	30,16	80	80½	21 25¾	128 42	E. by N.	Do.
☽ —— 22.	79	74½	30,10	78	75	20 46	126 26	N. N. E.	Fresh gales and heavy rain.
♂ —— 23.	79	74	30,04	78½	75	20 46	123 43	N. E.	Strong gales and do.
☿ —— 24.	78	73	29,91	77	74	21 30	122 35	Do.	Do.
♃ —— 25.	78½	70½	29,99	78	75	21 34	121 24	N. N. E.	Strong gales and heavy squalls.
♀ —— 26.	75½	70	30,01	74½	73	21 11	119 58	Variable.	Mod. and dull cloudy weather.
♄ —— 27.	74	69	30,08	73	71	20 58	118 33	North.	Do. with some rain.
☉ —— 28.	72	68	30,14	71½	71½	20 39	116 36	N.E. by N.	Fresh gales and hazy weather.
☽ —— 29.	70½	67½	30,15	69½	71½	21 58	114 59	N. E. by E.	Do. and cloudy weather.
♂ —— 30.	69	67	30,20	68	68	21 57	113 59	N.E. by N.	Moderate and dull cloudy weather.
☿ Dec. 1.	68½	63	30,27	68	67	At Macao in China.		Variable.	Do. with rain.
♃ —— 2.	69	63½	30,30	68½	65			N. by E.	Do.
♀ —— 3.	68	64	30,29	67½	65			N. N. E.	Do.
♄ —— 4.	67	64	30,27	66	65			N. by E.	Do.
☉ —— 5.	67½	62	30,28	67	67			Variable.	Light breezes and fine weather.
☽ —— 6.	75	64	30,26	72	75			N. N. E.	Fresh gales and fair.
♂ —— 7.	74½	67	30,32	72½	74			N. E. by N.	Do.
☿ —— 8.	74	66	30,31	73	67			N. N. E.	Do.
♃ —— 9.	69	64	30,25	66½	66			Variable.	Moderate and hazy.
♀ —— 10.	66	63	30,31	65	63			N. N. E.	Mod. breezes and fine weather.
♄ —— 11.	64	60	30,26	64	64			Do.	Do.
☽ —— 12.	63	56	30,38	61	57			N. E.	Fresh gales and fair.

1779.	Therm. B. Greatest Height.	Therm. B. Least Height.	At Noon. Marine Barom.	At Noon. Therm. A.	At Noon. Therm. B.	At Noon. Latitude in.	At Noon. Longitude in.	Winds.	Weather and Remarks.
	°	°		°	°	° ′	° ′		
☽ Dec. 13.	63	55	30,37	62	59			N. N. E.	Fresh gales and fine weather.
♂ —— 14.	62	56	30,30	61½	60			Do.	Moderate and hazy.
☿ —— 15.	64	56	30,31	69	59			N. E. by N.	Moderate with rain.
♃ —— 16.	68	57	30,28	68	65			N. N. E.	Do. and hazy.
♀ —— 17.	68½	57	30,29	67	68			Variable.	Do.
♄ —— 18.	67	58	30,27	66	66			N. E. by N.	Do. dull and cloudy.
☉ —— 19.	67½	58½	30,20	67	63			Do.	Fresh breezes and rainy.
☽ —— 20.	68½	59	30,24	68	65			N. N. E.	Moderate with small rain.
♂ —— 21.	69	60	30,21	69	64			Do.	Do.
☿ —— 22.	66	59	30,27	65	62			N. E. by N.	Moderate with hazy dark we.
♃ —— 23.	65½	58	30,19	65	61½			E. N. E.	Do. with much rain.
♀ —— 24.	64½	57	30,18	64	62			N. E. by N.	Do. with flying clouds.
♄ —— 25.	65	58	30,20	64½	63			S. E. by E.	Light breezes and fine.
☉ —— 26.	69½	57	30,14	67	69			N. E. ½ E.	Do. and hazy.
☽ —— 27.	69½	59	30,07	70	69			Variable.	Do. and fine.
♂ —— 28.	62	57	30,27	61	59			N. by E.	Light gales and fine.
☿ —— 29.	61	54	30,24	60	57	22 9 N	113 37½ E	Do.	Do.
♃ —— 30.	63	55	30,21	62½	61	At Macao in China.		N. N. E.	Moderate and fine weather.
♀ —— 31.	67½	56	30,16	62	61			N. E.	Do. and hazy.
1780.									
♄ Jan. 1.	67½	60	30,17	67	67			N. E. by E.	Do. with thick small rain.
☉ —— 2.	71	61	30,20	69	70			N. N. E.	Moderate and fine.
☽ —— 3.	73	62	30,22	69	73			Variable.	Light breezes and do.
♂ —— 4.	69	59	30,19	68 5	66			N. N. E.	Moderate breezes and fair.
☿ —— 5.	69½	61	30,20	69	65			N. E. by N.	Do.
♃ —— 6.	69	59	30,17	68	67			N. N. E.	Do. and a little cloudy.
♀ —— 7.	68	58½	30,21	67	66			E. N. E.	Fresh breezes and hazy.
♄ —— 8.	68	59	30,24	67½	67			N. N. E.	Do. and fine.
☉ —— 9.	68½	59½	30,23	68	66½			E. S. E.	Do.
☽ —— 10.	68	61	30,24	67	65			North.	Moderate and do.
♂ —— 11.	70	62	30,27	69	67			N. by E.	Do.
☿ —— 12.	72½	63	30,22	70	72			N. E.	Do.
♃ —— 13.	70	61	30,25	69	64			N. E. by E.	Moderate and cloudy.
♀ —— 14.	69½	59½	30,26	69	66	20 33 N	113 53 E	N. N. E.	Do. and fine weatner.
♄ —— 15.	72½	57	30,23	71½	70	18 57½	113 50	E. N. E.	Fresh breezes and fine.
☉ —— 16.	74	67	30,15	73	70½	16 39	114 3	Do.	Fresh gales and squally weath.
☽ —— 17.	76½	71	30,17	76	73	14 38	113 11	N. E.	Moderate breezes and fine.
♂ —— 18.	77	71½	30,10	76	75½	12 38	111 49	N. E. by N.	Fresh gales and cloudy.
☿ —— 19.	76	71	30,25	76	74½	10 24	109 37	N. by E.	Strong gales and squally.
♃ —— 20.	78	71	30,26	77	77	8 47	107 3	N. E. by N.	Moderate and fine.
♀ —— 21.	79	72	30,19	78	78			N. E.	Do.
♄ —— 22.	77½	73	30,16	77	76	8 40	106 46	Do.	Fresh breezes and do.
☉ —— 23.	78	72	30,11	77½	77	At Pulo Condore.		N. E. by N.	Do.
☽ —— 24.	77½	74	30,12	77	77			E. N. E.	Fresh gales and do.

1780.	Therm. B. Greatest Height.	Therm. B. Least Height.	At Noon. Marine Barom.	Therm. A.	Therm. E.	Latitude in.	Longitude in.	Winds.	Weather and Remarks.
	°	°		°	°	° ′	° ′		
♂ Jan. 25.	79	73	30,14	79	76¼	At Pulo Condore.		N. E.	Moderate and fine weather.
☿ —— 26.	79½	72	30,10	79	77			Variable.	Light breezes and flying clouds.
♃ —— 27.	80	75	30,14	79	79¼			N. E. by E.	Do.
♀ —— 28.	80	76	30,05	77	80			N. E.	Moderate and fine.
♄ —— 29.	81	75	30,10	78	81	6 51 N	105 58 E	E. N. E.	Do.
☉ —— 30.	80	75	30,10	79	79¼	4 59	104 58	N. E.	Do. and hazy.
☽ —— 31.	80½	75½	30,07	80	79	3 19	104 35	Do.	Do. and fine.
♂ Feb. 1.	81	74	30,05	80	79	1 17⅔	105 21	N. E. by N.	Moderate breezes and fine.
☿ —— 2.	81½	76	30,09	80¼	80	0 22 S	105 25	N. by E.	Do.
♃ —— 3.	82¼	77	30,07	81	82	1 48¼	105 13	Do.	Do.
♀ —— 4.	82	77½	30,09	82	81¼	2 23	105 40	N. by W.	Moderate and do.
♄ —— 5.	83	76	30,00	82	83	3 9	106 20	N. by E.	Light breezes and fine.
☉ —— 6.	83½	79	30,00	82	83	4 35¼	106 24	N. W.	Light breezes and hazy.
☽ —— 7.	83	79	29,97	81¼	81	5 21	106 7	N. N. E.	Little winds and fine.
♂ —— 8.	84	80	29,90	83	82	5 38	106 0	Variable.	Do. with rain.
☿ —— 9.	83	80	29,91	81¼	82	6 0	105 36	Variable.	Light airs and fine.
♃ —— 10.	84½	80	29,91	83	84	6 6	105 36	E. by N.	Do.
♀ —— 11.	83	79	29,95	82	81	6 6	105 36	S. W. by W.	Light breezes with squalls of rain.
♄ —— 12.	83	79½	29,97	82	81	6 6	105 36	N. by W.	Do. and hazy.
☉ —— 13.	82	78½	30,01	81	81¼	6 21¼	105 45	W. by N.	Fresh breezes and hazy.
☽ —— 14.	85	81½	29,97	83	83	6 36	105 11	Do.	Light breezes and do.
♂ —— 15.	83	80	29,93	82	82	6 36	105 11	W. N. W.	Do. with heavy rain.
☿ —— 16.	82½	79	29,95	82	80	6 36	105 11	N. by E.	Squally with rain.
♃ —— 17.	84½	81	29,89	84	83	6 36	105 11	Do.	Do.
♀ —— 18.	84	81½	29,91	84	83¼	6 42	105 1	W. N. W.	Gentle breezes and fair.
♄ —— 19.	84	76½	29,96	83¼	83¼	7 30	105 0	W. by S.	Do. with hazy and sultry w.
☉ —— 20.	83	77	29,93	83	83	8 30	104 54	Do.	Fresh breezes and fine.
☽ —— 21.	84	80	29,90	83¼	83¼	9 27	104 38	W. by N.	Do.
♂ —— 22.	84	79½	29,89	83¼	83	10 28	104 14	N. W. by W	Moderate and do.
☿ —— 23.	85	81	29,90	83	84	11 45	103 36	Do.	Squally with rain.
♃ —— 24.	84	78	29,86	83	84	13 6	103 0	N. W. by N.	Fresh gales and hazy.
♀ —— 25.	84	77	30,07	80	83	13 28	101 21	S. S. W.	Do. and squally.
♄ —— 26.	81	77	30,01	80	79¼	13 44	99 50	Variable.	Light breezes and hazy.
☉ —— 27.	81½	77	29,98	81	80	13 54	99 10	E. S. E.	Gentle breezes and fine.
☽ —— 28	82	76	30,15	80¼	81¼	15 0	97 33	S. E.	Fresh gales and hazy.
♂ —— 29.	81	77	30,12	79¼	79	15 54	94 40	S. E. by S.	Moderate breezes and fine.
☿ Mar. 1.	80	76½	30,10	79¼	78¼	16 52¼	92 0	S. S. E.	Fresh breezes and fine.
♃ —— 2.	79	76	30,19	78¼	78	17 15	89 25	E. S. E.	Gentle gales and fair.
♀ —— 3.	79½	76	30,21	78¼	79	17 58¼	87 23	S. E. by E.	Do.
♄ —— 4.	80	76	30,16	78¼	79	18 25¼	84 14	E. S. E.	Do.
☉ —— 5.	89	76	30,17	78¼	77	19 3¼	83 2	S. E. by S.	Fresh gales and hazy.
☽ —— 6.	81	75½	30,15	79	81	19 15	81 1	E. by N.	Do. and squally.
♂ —— 7.	80	75	30,15	79¼	79¼	19 34¼	78 30	East.	Do. dull and hazy.
☿ —— 8.	82	76	30,14	80¼	81	20 2	76 48	Do.	Moderate and fine.

1780.	Therm. B. Greatest Height.	Therm. B. Least Height.	At Noon. Marine Barom.	Therm. A.	Therm. B.	Latitude in.	Longitude in.	Winds.	Weather and Remarks.
	°	°		°	°	° ′	° ′		
♃ Mar. 9.	82	76	30,13	80½	80½	20 22 S	75 0 E	S. E. by E.	Moderate and fine weather.
♀ —— 10.	81½	77	30,19	81	79½	20 39	72 10	S. E.	Fresh breezes and a little hazy.
♄ —— 11.	81	77	30,18	80	79	20 59½	71 36	S.S. E.	Do. and fine.
☉ —— 12.	82	77	30,17	80½	81½	21 8	69 12	S. E.	Do.
☽ —— 13.	81	78	30,14	81	80	21 28	66 52	E. S. E.	Do.
♂ —— 14.	81½	76	30,21	81	79	22 3	64 48	Do.	Mod. and cloudy with some r.
☿ —— 15.	82	76	30,21	81	80½	22 40	62 47	Variable.	Moderate and fine.
♃ —— 16.	81½	76	30,31	81	80	23 13½	61 18	S. E. by E.	Do. with showers of rain.
♀ —— 17.	81	77½	30,22	80½	80	24 2	59 53	E. by N.	Do. and rain.
♄ —— 18.	81	77	30,29	80	78	25 10	58 40	S. S. E.	Fresh breezes and fine.
☉ —— 19.	80½	74½	30,25	76½	76	26 9	56 30	Do.	Do.
☽ —— 20.	77	73	30,22	76	76	26 35½	54 38	E. S. E.	Do. and cloudy weather.
♂ —— 21.	77	74	30,30	77	76	27 22	52 25	Do.	Do. and fine.
☿ —— 22.	77½	73	30,27	76½	76	28 8½	49 37	Do.	Fresh gales and flying clouds.
♃ —— 23.	77	73	30,19	77	76	28 27	46 20	S. S. E.	Do. and squally.
♀ —— 24.	77	72	30,36	76½	76	29 8½	43 30	Do.	Do. and fair.
♄ —— 25.	77	72	30,25	76	76	29 38	40 50	S. E.	Mod. breezes and fine weather.
☉ —— 26.	76	72	30,19	75	74½	39 27½	38 37	S. S. E.	Do.
☽ —— 27.	77½	72	30,09	76	77	31 3	37 10	S. E.	Do. and fair weather.
♂ —— 28.	77½	74	29,86	76	70	30 46	35 9	Variable.	Thunder light. and heavy rain.
☿ —— 29.	76½	70	30,21	73	76	31 23	34 10	W. S. W.	Moderate fine and clear.
♃ —— 30.	77	70	30,23	74	76	31 2½	33 20	S. W. by S.	Light winds and fine.
♀ —— 31.	77	71	30,28	76½	75	31 22	32 0	S. S. E.	Light breezes and hazy.
♄ April 1.	76½	70	30,27	76	76	32 12	30 27	S. E. by E.	Moderate breezes and very fine.
☉ —— 2.	78	72	30,17	76	78	33 28	28 47	Variable.	Do. with fine weather.
☽ —— 3.	80	73	30,08	77½	79½	35 1	26 2	E. by S.	Do.
♂ —— 4.	79	72	30,14	76	79	35 24½	23 54	S. E.	Light airs and fair.
☿ —— 5.	76	72½	30,[illegible]	74½	73	36 12	22 7	S. S. W.	Gentle breezes and fair.
♃ —— 6.	75	71	30,26	75	73½	35 48½	21 31	S. by W.	Do.
♀ —— 7.	75	70	29,98	74½	73	35 12	20 27	S.W. by W.	Light breezes and hazy.
♄ —— 8.	72	68	30,00	71	67	35 0	20 11	N. W.	Fresh gales and squally.
☉ —— 9.	68	64	30,05	66	65	35 6½	19 39	E. S. E.	Do. and fine.
☽ —— 10.	69	65½	30,06	68	67½	34 37½	18 30	N. W.	Strong gales and fair.
♂ —— 11.	68	62	30,25	64½	67	In False Bay at the Cape of Good Hope		W. N. W.	Light breezes and fine.
☿ —— 12.	67½	62	30,25	65	67			N. N. W.	Do.
♃ —— 13.	67	62½	30,19	66	65			South.	Moderate breezes and fine.
♀ —— 14.	67½	61	30,17	67	64			S. S. E.	Light breezes and fine.
♄ —— 15.	68½	61	30,12	68	64			West.	Do.
☉ —— 16.	78½	66	30,04	78	73			N. W.	Do.
☽ —— 17.	87	68	30,06	86	81			N. N. W.	Moderate with flying clouds.
♂ —— 18.	81	69	30,03	79	74			S. S. E.	Do.
☿ —— 19.	85	71½	30,14	84	73			N. N. W.	Moderate and flying clouds.
♃ —— 20.	76	67	29,91	70	68			N. W.	Fresh breezes and do.
♀ —— 21.	72	69	30,11	71½	70			S. S. E.	Do. and fine weather.

1780.	Therm. B. Greatest Height.	Therm. B. Least Height.	At Noon. Marine Barom.	At Noon. Therm. A.	At Noon. Therm. B.	At Noon. Latitude in.	At Noon. Longitude in.	Winds.	Weather and Remarks.
	°	°		°	°	° ′	° ′		
♄ April 22.	77	71	30,21	76	74	In False Bay at the Cape of Good Hope		S. E.	Fresh gales and fine weather.
☉ —— 23.	79½	68	30,27	79	69			Do.	Do.
☽ —— 24.	79½	70	30,24	79	73			Do.	Do.
♂ —— 25.	76	69	30,22	76	75			Do.	Do. and fine.
☿ —— 26.	77	69½	30,25	76	73			West.	Fresh breezes and do.
♃ —— 27.	79	66	30,04	78½	67			Variable.	Light breezes and hazy.
♀ —— 28.	73	69	29,89	71	72			N. W. by N.	Fresh gales and squally with rain.
♄ —— 29.	73	68	30,07	72	71			N. N. W.	Do. and fine.
☉ —— 30.	69	64	30,11	68	67			S. E.	Strong gales and fine.
☽ May 1.	76½	70	30,21	76½	71			N. W.	Mod. breezes and fine.
♂ —— 2.	65	62	29,96	64	63½			Do.	Do. with rain.
☿ —— 3.	64½	61	29,97	64	63			Do.	Do. and hazy.
♃ —— 4.	65	60	30,01	64	63			S. W.	Do. with flying clouds.
♀ —— 5.	73	61	30,14	72	71			W. N. W.	Do. and fine.
♄ —— 6.	73	62	30,14	72	71			West.	Light airs and fine.
☉ —— 7.	73	64	30,16	72	72			Variable.	Do.
☽ —— 8.	73½	70	30,19	71	73			S. by E.	Moderate and fine.
♂ —— 9.	73	68	29,93	69	72	34 21 S	18 29 E	N. W.	Fresh breezes and fine.
☿ —— 10.	69	62	29,95	67½	63	34 47	17 49	N. by E.	Do. gales with small r. at times.
♃ —— 11.	65½	61	30,19	65	64½	34 21	17 41	W. by S.	Moderate and hazy.
♀ —— 12.	67	60	30,22	66	63	33 37	17 17	W. by N.	Light breezes, dull and cloudy.
♄ —— 13.	67½	59½	30,29	66½	67	32 32	16 24	S. S. W.	Do. and fine weather.
☉ —— 14.	66	59	30,34	65	64	31 19	14 20	S. E. by S.	Fresh gales and fine.
☽ —— 15.	66	61	30,25	65	64½	29 53	10 35	Do.	Fresh breezes and hazy.
♂ —— 16.	68½	59	30,28	67	68	28 38	7 56	Do.	Moderate breezes and fine.
☿ —— 17.	69½	63	30,27	69	68	27 33	5 44	S. E.	Do.
♃ —— 18.	71	62	30,30	70	68	26 30	3 38	Do.	Do.
♀ —— 19.	72	63	30,25	71½	69½	25 24½	1 25	S. E. by S.	Do. and hazy weather.
♄ —— 20.	72½	66	30,21	71½	72	24 25	0 22 W	S. by E.	Do. with flying clouds.
☉ —— 21.	73	66	30,24	71	72	23 24	2 19	South.	Do.
☽ —— 22.	74	67	30,25	73	71	22 17	4 2	S. E. by E.	Do.
♂ —— 23.	74	68	30,26	74	72	20 48½	5 47	Do.	Do.
☿ —— 24.	75½	68	30,27	75	72	19 36½	7 46	E. S. E.	Mod. with some light showers.
♃ —— 25.	74½	69	30,22	74	72	18 10	9 43	Do.	Do. and fine weather.
♀ —— 26.	75	69	30,20	74	72½	16 50½	11 17	Do.	Do.
♄ —— 27.	74½	70	30,16	73	74	15 53	12 20	Variable.	Do. and cloudy.
☉ —— 28.	77	70½	30,16	75	77	14 57	13 23	S. E. by E.	Moderate and fine.
☽ —— 29.	78	71	30,15	77	78	14 18½	14 8	E. S. E.	Light airs and fair.
♂ —— 30.	78½	70	30,16	77	75	13 39½	14 52	Do.	Do. and cloudy.
☿ —— 31.	80	72	30,12	77	79½	12 46	15 52	Do.	Do.
♃ June 1.	78	74	30,17	76	77½	11 54	16 30	S. E.	Light breezes and fine.
♀ —— 2.	79½	70½	30,20	78	79	11 15	17 32	S. E. by E.	Light airs and fair.
♄ —— 3.	78½	71	30,19	78½	77½	10 36	18 0	Variable.	Do.
☉ —— 4.	81	74	30,19	80	78	9 44	19 8	S. E. by E.	Mod. breezes and fine weather.

1780.	Therm. B. Greatest Height.	Therm. B. Least Height.	At Noon. Marine Barom.	At Noon. Therm. A.	At Noon. Therm. B.	At Noon. Latitude in.	At Noon. Longitude in.	Winds.	Weather and Remarks.
	°	°		°	°	° ′	° ′		
☽ June 5.	80½	75	30,21	79½	79	8 51 S	20 41 W	S. E.	Mod. breezes and fine weather.
♂ —— 6.	81½	75	30,19	80½	81	7 52½	21 16	E. S. E.	Do.
☿ —— 7.	82	77	30,17	81	80½	6 33	22 42	E. by S.	Moderate and fine weather.
♃ —— 8.	83	77	30,16	82½	80	4 50	23 52	E. S. E.	Do.
♀ —— 9.	83	77½	30,16	82	80½	3 11	25 3	E. by S.	Do.
♄ —— 10.	82	78	30,19	81	80½	1 41	26 4	E. S. E.	Do.
☉ —— 11.	82	77	30,17	81½	81	0 19½	26 15	S. by E.	Light breezes and fine weather.
☽ —— 12.	83	78	30,11	81½	82	1 36½ N	26 22	S. S. E.	Fresh breezes and cloudy, with rain.
♂ —— 13.	83½	79	30,18	82½	83	3 47	26 37	S. E. by S.	Do. and a little hazy.
☿ —— 14.	81½	77	30,09	80½	80	4 24	26 9	S. S. E.	Do. with squalls of rain.
♃ —— 15.	82	76	30,22	81½	80½	4 57½	25 48	Variable.	Light winds and fine weather.
♀ —— 16.	83½	76½	30,17	82½	82	5 25¾	25 46	Do.	Do.
♄ —— 17.	85	78½	30,14	84	82½	6 25¾	26 0	N. E. by E.	Light airs and do.
☉ —— 18.	83	76	30,11	82½	82	7 8½	26 40	N. N. E.	Fresh breezes and hazy.
☽ —— 19.	83	79	30,13	83	82½	7 24½	28 0	Do.	Light winds and do.
♂ —— 20.	83	78	30,14	82	81½	8 7½	27 58	N. by W.	Fresh breezes and fine.
☿ —— 21.	83½	77	30,20	81½	82	9 11¾	27 40	S. by W.	Moderate and fair.
♃ —— 22.	83	79	30,15	82	81	9 19	28 0	North.	Do.
♀ —— 23.	81½	77½	30,10	81	80	9 44	29 0	N. E.	Do.
♄ —— 24.	82	78	30,07	81½	80	10 36	30 2	Do.	Do. with flying clouds.
☉ —— 25.	82	77	30,12	81	80	11 44	30 32	E. N. E.	Do.
☽ —— 26.	81	77	30,13	80	78½	12 54	31 48	N. E. by N.	Fresh breezes and fine weather.
♂ —— 27.	81	77	30,14	80	80	14 1¾	32 58	N. E. by E.	Do.
☿ —— 28.	81½	77	30,13	80	79	15 24½	34 0	E. by N.	Do.
♃ —— 29.	80	76½	30,15	79½	78	16 56	34 44	Do.	Do. and hazy weather.
♀ —— 30.	79	75½	30,31	78½	78	18 22	36 4	E. N. by E.	Do. with fine weather.
♄ July 1.	79	71	30,35	78	77	20 2½	37 48	Do.	Fresh breezes and do.
☉ —— 2.	78	74	30,27	77½	77½	21 20½	38 20	East.	Moderate breezes and do.
☽ —— 3.	79½	74	30,27	78½	78	22 41½	38 38	Do.	Do. hazy weather.
♂ —— 4.	79	74½	30,28	78½	78½	24 3	39 23	Variable.	Do.
☿ —— 5.	80	75	30,33	79	77½	25 25	40 18	N. E. by E.	Do. with a little small rain.
♃ —— 6.	79½	74	30,30	79	79	26 53	41 4	E. by N.	Moderate and fine weather.
♀ —— 7.	81	76	30,27	80½	81	27 58¾	41 2	East.	Do. and hazy.
♄ —— 8.	81½	76½	30,20	81	80½	28 58½	41 36	E. by N.	Light breezes and fine weather.
☉ —— 9.	83	77	30,26	80	83	29 33	41 46	E. S. E.	Light airs and do.
☽ —— 10.	83	78	30,44	82	82½	29 44½	41 46	Do.	Do.
♂ —— 11.	82	78	30,43	80	80	30 45½	41 51	East.	Fresh breezes and fine.
☿ —— 12.	82	78	30,40	81	80½	32 10¾	42 2	E. S. E.	Do.
♃ —— 13.	81	76½	30,40	79½	78½	33 17	42 1	Do.	Moderate with rain at times.
♀ —— 14.	81	77	30,48	80	80	34 36	41 32	Do.	Light breezes and fine weather.
♄ —— 15.	82	76	30,45	86½	80½	35 31	41 25	S. E.	Light airs and fine.
☉ —— 16.	83	76	30,46	81	81	35 48	41 34	S. E. by S.	Do. and fair.
☽ —— 17.	82	77	30,48	81	81	36 11½	40 54	S. by W.	Light breezes and fine weather.
♂ —— 18.	81	74	30,48	80	80	36 36	39 54	S. S. W.	Do. and fair.

1780.	Therm. B. Greatest Height.	Therm. B. Least Height.	At Noon. Marine Barom.	Therm. A.	Therm. B.	Latitude in.	Longitude in.	Winds.	Weather and Remarks.
	°	°		°	°	° ′	° ′		
☿ July 19.	80½	76	30,54	80	79	37 9 N	38 45 W	S.W. by W.	Mod. breezes and fine.
♃ —— 20.	80	72	30,55	77	78	37 47½	38 0	West.	Do. with squalls of rain.
♀ —— 21.	79½	75	30,50	78	77	37 47	37 0	N. E.	Fresh breezes and showers of rain.
♄ —— 22.	79½	74	30,36	78½	77	38 20	37 0	E. by N.	Light breezes with fine weath.
☉ —— 23.	79	74	30,33	78	78	38 35	37 4	E. S. E.	Do. and very fine weather.
☽ —— 24.	81	74½	30,34	79	80	38 41½	37 7	S. S. E.	Do.
♂ —— 25.	77½	76	30,15	76½	76	38 46	36 33	W. by S.	Fresh breezes with rain.
☿ —— 26.	78	75	30,10	79	78	38 58	35 50	Variable.	Light breezes and hazy.
♃ —— 27.	77½	75	30,10	77	77	40 16	33 45	S. E. by E.	Fresh gales and cloudy.
♀ —— 28.	75½	74	30,11	76	76	41 13	31 30	S. W.	Do. with squalls of rain.
♄ —— 29.	74	71	30,14	74½	74½	42 15	28 50	N. W.	Do. and fair.
☉ —— 30.	76	71½	30,17	73½	73	43 18	27 0	Variable.	Light airs and fair.
☽ —— 31.	76	71	30,28	75	75½	43 27	26 25	S. S. W.	Do.
♂ Aug. 1.	76	70	30,34	75½	75½	44 1	25 40	Do.	Do.
☿ —— 2.	76	71	30,45	75	75	44 27½	24 40	S. by W.	Moderate and fair.
♃ —— 3.	76½	70	30,43	75½	74½	44 51	23 0	W. S. W.	Light breezes and fair.
♀ —— 4.	76	69	30,26	75½	75½	45 12	21 48	Variable.	Do.
♄ —— 5.	73	68	30,27	72	70	45 51	19 46	N. by W.	Moderate and fine weather.
☉ —— 6.	75	67	30,21	75	73½	46 31	19 8	Variable.	Light breezes and do.
☽ —— 7.	74	67	30,01	73½	69	48 49½	18 22	South.	Fresh gales with rain.
♂ —— 8.	70	66	30,25	69	62	50 30	16 14	North.	Moderate with much rain.
☿ —— 9.	67	58	30,15	65½	61	51 17½	14 15	East.	Do. and hazy.
♃ —— 10.	67	58	30,26	66	62	51 58	15 0	N. E.	Do.
♀ —— 11.	67	58	30,15	66½	61	52 29	16 13	Variable.	Do.
♄ —— 12.	67½	59	30,06	67	61½	52 54½	16 20	North.	Light breezes and foggy.
☉ —— 13.	66	58	30,21	62	61	52 50	15 50	Do.	Moderate and hazy.
☽ —— 14.	68	60	30,02	68	63½	53 28	15 35	East.	Do.
♂ —— 15.	67½	60½	29,97	67	63	54 27½	15 42½	E. S. E.	Do.
☿ —— 16.	68	60	30,01	67½	69	55 16	15 9	Variable.	Do.
♃ —— 17.	68	60	30,03	67½	63	56 4½	13 15	S. S. E.	Do.
♀ —— 18.	67½	60½	30,05	67	66½	56 10	12 5	S. W.	Light breezes and fine weather.
♄ —— 19.	67	61	29,95	66	61½	56 47½	10 18	S. S. W.	Fresh breezes and hazy.
☉ —— 20.	66	60	29,98	65	62	58 27	7 51	South.	Strong gales with rain.
☽ —— 21.	66	60	29,75	65	62½	58 54	4 22	W. by N.	Mod. with rain at times.
♂ —— 22.	66½	60	29,86	66	63	In Strumness at the Orkneys.		W. by S.	Do. with small rain.
☿ —— 23.	64	60	30,03	63	61			West.	Fresh breezes with rain.
♃ —— 24.	64½	60½	30,13	63½	63			W. by N.	Do. with small rain.
♀ —— 25.	63	58	30,24	61	62			Do.	Moderate with hazy weather.
♄ —— 26.	65	59	30,28	63	64			W. N. W.	Do. and fair.
☉ —— 27.	64	60	30,34	63	62			South.	Light breezes and fine weather.
☽ —— 28.	62	57	30,29	61½	61			S. S. E.	Fresh breezes and foggy.
♂ —— 29.	62	57	30,13	61½	61			Variable.	Do. and foggy.
☿ —— 30.	64	58	29,95	64	62			S. E. by E.	Light breezes with rain.
♃ —— 31.	66	58½	30,01	65	64½			W. N. W.	Do. and foggy.

OBSERVATIONS

FOR

Determining the Quantity of SALT in SEA WATER, on different Parts of the Globe.

1776.	Weight of a Quantity of Sea Water contained in the Bottles A. and B. A. oz. dwt. grs.	B. oz. dwt. grs.	Quantity of Salt in Parts of the Whole. A.	B.	Thermometers. In Water. °	In Air. °	Latitude in. ° ′	Longitude in. ° ′	Remarks.
July 13.	3 5 0	3 6 17	,0341	,0339	59	64½	In Plymouth Sound		
Aug. 9.	3 5 2	3 6 18	,0376	,0365	68	69	39 10 N	11 30 W	
——14.	3 5 1	3 6 17	,0376	,0365	72	74	33 7	17 15	
——22.	3 4 23½	3 6 15	,0367	,0353	75	76½	21 0	22 30	
Sept. 9.	3 5 0	3 6 16	,0377	,0365	77½	78	4 16	13 40	
——13.	3 4 23½	3 6 16	,0271	,0367	76½	77½	1 50	12 0	
——21.	3 4 23	3 6 16	,0362	,0361	74	75½	5 5 S	19 10	
——30.	3 5 0	3 6 17	,5366	,0365	72	73	20 0	24 20	
Oct. 20.	3 5 1	3 6 18½	,0349	,0352	59	54½	33 41	1 30	
——28.	3 5 2	3 6 19	,0361	,0358	60	60	33 59	11 18 E	
Dec. 17.	3 5 4	3 6 21½	,0345	,0347	44	40½	48 30	55 36	
1777.									
Jan. 7.	3 5 2½	3 6 21	,0339	,0347	46½	46½	48 18	94 41	
——22.	3 5 3	3 6 21½	,0365	,0374	58	57½	43 28	143 20	
Feb. 4.	3 5 2½	3 6 20	,0365	,0366	60	58½	43 40	159 30	
Mar. 2.	3 5 2	3 6 21	,0367	,0376	61	60½	42 35	179 35 W	
——10.	3 5 1	3 6 20½	,0370	,0376	63	67½	39 23	164 45	
——22.	3 4 23	3 6 18½	,0363	,0383	74½	76½	26 8	159 10	
April 7.	3 4 22	3 6 16	,0363	,0354	79½	83	19 29	161 30	
June 18.	3 4 23	3 6 17½	,0365	,0376	75½	80½	21 8	175 16	
July 20.	3 4 23	3 6 17	,0356	,0362	71	69	22 32	173 13	
Aug. 7.	3 4 23	3 6 16½	,0353	,0357	69½	66½	25 8	150 43	
Dec. 22.	3 4 22	3 6 17	,0358	,0374	77	75	0 24 N	156 56	
1778.									
Feb. 14.	3 5 0	3 6 19	,0351	,0366	64	62	31 33	154 12	
——20.	3 5 0	3 6 19½	,0332	,0351	54	58	38 10	152 15	
——28.	3 5 0	3 6 18½	,0321	,0333	49½	51½	44 47	131 45	
Mar. 19.	3 5 0	3 6 19	,0322	,0333	48	50	44 44	125 42	
Apr. 20.	3 4 14	3 6 7	,0232	,0232	48½	47			At time of low water.
	3 4 11½	3 6 5	,0211	,0217	49	48	49 36	126 33	At time of high water.
	3 3 10	3 5 3	,0000	,0000	44	45			Fresh water.

The three last sets of observations were made in King George's Sound on the N. W. coast of America, the fresh water was that of melted snow.

1778.	Weight of a Quantity of Sea Water contained in the Bottles A. and B. A. oz. dwt. grs.	B. oz. dwt. grs.	Quantity of Salt in Parts of the Whole. A.	B.	Thermometers. In Water. °	In Air. °	Latitude in. ° ′	Longitude in. ° ′	Remarks.
May 9.	3 5 0	3 6 18¼	,0332	,0331	47	50	59 45 N	143 44 W	
—27.	3 5 1	3 6 19¾	,0344	,0322	41	42½	59 48	152 29	
—30.	3 4 23	3 6 17¼	,0296	,0307	41	43	60 50	151 44	The water very thick and dirty at time of high water.
July 10.	3 4 17	3 6 12	,0252	,0270	46	47	58 16	159 30	
—14.	3 4 20	3 6 15¼	,0301	,0321	57	60	58 14	161 27	Off the mouth of a river.
—18.	3 4 18	3 6 13¾	,0280	,0299	54½	56½	59 37	162 43	
Aug. 5.	3 4 16	3 6 10¼	,0262	,0274	54½	50½	64 35	167 36	Near shore in 7 fathom w.
—19.	3 5 0	3 6 18¼	,0305	,0316	41½	36	70 15	164 35	Near a field of ice.
Sept. 9.	3 4 13	3 6 8	,0219	,0237	46½	45½	64 40	161 3	In Norton Bay.
—27.	3 4 23	3 6 18	,0303	,0332	45½	44	58 5	169 20	
Oct. 6.	3 4 21	3 6 16	,0309	,0329	56½	53½	42 14	158 40	
Nov. 11.	3 4 23¼	3 6 18¼	,0371	,0386	77	76	38 36	154 32	
1779.									
Mar. 19.	3 4 22¼	3 6 18	,0357	,0377	74	74½	21 10	166 12	
—25.	3 4 21	3 6 16	,0349	,0351	77	78½	19 52	175 56	
Apr. 20.	3 5 2	3 6 20	,0305	,0313	39	31½	49 58	161 2 E	Off E. coast of Kamtschatka.
July 19.	3 4 23	3 6 17¼	,0283	,0294	34½	34½	70 16	163 36 W	In the ice.
Aug. 12.	3 5 1	3 6 20	,0325	,0341	47½	50	55 24	171 0 E	
Oct. 16.	3 5 0	3 6 17¼	,0319	,0322	48½	47½	45 20	155 20	
Nov. 6.	3 4 21	3 6 15	,0311	,0322	58½	59½	35 0	147 44	
—29.	3 4 20	3 6 14	,0324	,0341	72	74½	21 56	112 57	
1780.									
Feb. 1.	3 4 18	3 6 12	,0328	,0335	78½	81	0 2 S	105 6	
Mar. 3.	3 4 21¼	3 6 16	,0356	,0367	72½	77½	18 2	84 27	
—20.	3 4 21¼	3 6 17	,0353	,0372	76	75½	27 16	50 15	
—30.	3 4 20	3 6 16	,0339	,0362	75½	76	31 3	33 25	
May 18.	3 5 0	3 6 19	,0356	,0371	67	67	26 25	3 30	
—31.	3 5 0	3 6 18¼	,0372	,0386	75½	77	12 48	15 40 W	
June 10.	3 4 22¼	3 6 17	,0366	,0379	79	79½	6 30	26 20	
July 3.	3 5 0¼	3 6 19	,0379	,0387	75½	76	23 20 N	39 30	
—21.	3 5 0¼	3 6 18¼	,0380	,0386	76½	76½	37 51	36 56	
—30.	3 5 0	3 6 18	,0367	,0374	71½	72½	43 20	26 50	
Aug. 15.	3 5 2	3 6 20	,0363	,0371	62½	64½	55 4	17 50	
—20.	3 5 0¼	3 6 19	,0341	,0351	57	62	58 54	7 20	Off N. W. Part of Scotland.

The Honourable Henry Cavendish, F.R.S. found by experiment that the bottles $\left\{\begin{matrix}A.\\B.\end{matrix}\right\}$ holds $\left\{\begin{matrix}\text{oz.} & \text{dwt.} & \text{grs.}\\ 3 & 3 & 10\frac{3}{4}\\ 3 & 5 & 3\frac{1}{4}\end{matrix}\right\}$ of distilled water, at the heat of 58°—The specific gravity of sea water diminishes ,00015 by 1° of heat.—Sea water whose specific gravity at 52° is = 1,0241 contains ,0322 of its weight of salt. Therefore water whose specific gravity at 52° is $1+x$ contains $x \times \frac{1}{.0241} = x \times 1.3361$ its weight of salt, whence the 3d and 4th columns were computed.

OBSERVATIONS

FOR

Determining the Quantity of SALT in SEA WATER,

By CAPT. COOKE and LIEUT. KING.

1776.	Weight of Salt Water in Grains.	Quantity of Salt in Parts of the Whole	Thermometers. In Water.	Thermometers. In Air.	Latitude in.	Longitude in.	Remarks.
	Grains.		°	°	° ′	° ′	
July 29.	1542	,0380	70½	71¾	33 28 N	14 48 W	
Aug. 17.	1543	,0389	66	79	10 27	13 15	The last of the two was taken up after a smart shower of rain.
	1538	,0340	66	79			
——29.	1537½	,0331	78	79	2 40	23 35	
Sept. 1.	1538	,0340	76½	78½	0 3 S	28 21	
—— 8.	1542	,0380	79	78	8 50	34 44	
——22.	1543	,0389	67	70	28 28	32 0	
Oct. 8.	1543	,0389	57	63	35 31	7 30	
1777.							
Mar. 27.	1541	,0370	78	80	23 16	158 0	
1778.							
Jan. 2.	1543	,0389	77	79	10 44 N	153 40	
Feb. 9.	1545	,0410	71½	73½	30 59	157 0	
Mar. 19.	1544	,0400	48¾	49½	44 57	123 56	
May 28.	1542	,0380	40	47	59 50	148 56	In the entrance of Seduction River.
July 10.	1532	,0283	49½	48¾	58 16	154 20	
——25.	1545	,0410	42	49	58 30	164 0	

LATITUDES AND LONGITUDES

OF

Most of the REMARKABLE PLACES explored during the VOYAGE.

By Capt. Cooke and Lieut. King.		By Wm. Bayly.		Places Names.	
Latitude.	Longitude.	Latitude.	Longitude.		
° ′	° ′	° ′	° ′		
	0 30 E			Sheerness.	
	1 20 E			North Foreland.	
		50 29 N	2 45½ W	Portland Roads.	
50 51½ N	4 14 W	50 51½ N	4 13½ W	Plymouth Sound, Drake's Island.	
49 57½ N	6 20 W			St. Agnes's Light-house on Scilly Isles.	
	5 18 W			Ushant.	
	9 19 W	42 52½ N	9 18½ W	Cape Finister.	
28 18 N	16 30½ W			Pic of Teneriff.	
26 17 N	22 59 W			North end of the island of Bonavista.	
14 53½ N	23 51 W	14 54 N	23 55 W	Port Praya Bay at the island of St. Jago.	
46 40 S	38 0 E	46 39 S	38 5 E	Northerly of Prince Edward's Islands.	
46 53 S	37 46 E	46 52 S	37 48 E	Southerly of ditto.	
48 39 S	68 40 E	48 30 S	68 37½ E	Bligh's Cap, the most northerly rock,	At Kerguelen's Land.
48 41	69 4	48 41½	69 0	Christmas Harbour,	At Kerguelen's Land.
49 3	69 37	49 3½	69 33	Port Pallifer,	At Kerguelen's Land.
49 23	70 34	49 24	70 30	Cape Digley,	At Kerguelen's Land.
49 54	70 13	49 55	70 11	Cape George, the most southerly point,	At Kerguelen's Land.
43 21½	147 29	49 21½	147 36	Adventure Bay,	Vandieman's Land.
43 33	147 28	43 34	147 33	Jasman's Head,	Vandieman's Land.
43 42	146 56	43 43	147 0	South Cape,	Vandieman's Land.
43 37	146 7	43 38	146 4	S. W. Cape,	Vandieman's Land.
43 55	147 6	43 56	147 9	Swilly Island,	Vandieman's Land.
21 57	201 53	21 56½	202 1	Mangea Island.	
20 1	201 45	20 2	201 46	Wateeoo Island.	
19 15	201 37	19 50	201 37	Atakootaia Island.	
	200 56	19 16	201 3	Hervey's Island.	
		18 1	196 33	Palmerston's Island.	
19 39	185 44½	19 43	185 21	North end of Hapaee,	Friendly Islands.
21 8½	184 55	21 8½	184 47½	Tongotaboo,	Friendly Islands.
20 14½	185 11½	20 15½	185 4½	Annamocka,	Friendly Islands.
23 25	210 37	23 25	210 42	Toobovai Island.	
17 30	210 0	17 30	210 12	Emio.	

Latitudes and Longitudes of moſt of the remarkable Places continued.

By Capt. Cooke and Lieut. King.				By Wm. Bayly.				Places Names.	
Latitude.		Longitude.		Latitude.		Longitude.			
°	′	°	′	°	′	°	′		
17	29¾	210	22¼	17	29¾	210	34	Point Venus at Otaheite.	
16	42¾	208	52½	16	42¾	208	48	Owharre Harbour at Huaheine.	
16	45¼ S	208	25½	16	45¼ S	208	20¾	Ohamaneno Harbour at Ulietea.	
1	58 N	202	28	1	57½ N	202	22	Chriſtmas Iſland.	
44	55 N	235	54	44	51	235	46	Cape Foulweather,	N. W. Coaſt of America.
44	6	235	52	44	3	235	40	Cape Perpetua,	
43	30	235	57	43	28	235	45	Cape Gregory,	
43	10	235	55	43	14	235	50	Cape Blanco,	
48	15	235	3	48	16	235	0	Cape Flattery,	
49	15	233	20	49	16	233	17	Point Breakers,	
50	0	232	0	50	1	232	6	Woody Point,	
49	36	233	17¾	49	36	233	19¾	Nootka, or King George's Sound,	
57	3	224	7	57	6	224	2	Cape Edgecombe,	
57	57	223	21	58	0	223	10	Croſs Cape,	
60	27	219	0	60	22	219	0	Mount St. Elias,	
59	49	216	58	59	47	216	45	S. W. end of Kay's Iſland,	
59	10	207	45	59	12	207	51	Cape Eliſzabeth,	
58	15	207	42	58	15	207	52	St. Hermogene's Iſland,	
57	33	207	15	57	29	207	30	Cape Greville,	
56	36	205	0	56	34	205	14	Trinity Iſland,	
56	10	202	45	56	14	202	36	Foggy Iſland,	
53	55	193	30	53	54¾	193	36	Samgonooda Harbour, at Oonalaſhka,	
54	30	192	30	54	31	192	28	Oonemak Iſland,	
58	27	201	55	58	27	201	50	Briſtol River,	
58	57	200	6	58	56	200	7	Round Iſland,	
58	42	197	36	58	41	197	45	Cape Newnham,	
				60	16	213	5	Cape Hinchingbrook,	
59	37¾	197	45¾	59	37	197	37	Shole Neſs,	
60	17	187	30	60	17	187	28	Anderſon's Iſland,	
64	30	193	57	64	30	193	47	Sledge Iſland,	
65	46	191	45	65	45	191	40	Cape Prince of Wales, moſt weſterly part,	
67	45	194	51	67	46	194	45	Point Mulgrave,	
70	29	198	20	70	29	198	15	Icy Cape,	
69	5	194	42	69	5	194	33	Cape Liſburne,	
64	21	197	0	64	21	197	0	Cape Darby,	
64	31	197	13	64	30	197	12	Norton Sound,	
63	33	197	41	63	34	197	45	Cape Stephens,	
61	15	190	30	61	15	190	10	Clerk's Iſland,	
53	57	191	2	53	57	192	0	A ſteep rock to the N.W. of Oonalaſhka,	

Latitudes and Longitudes of moſt of the remarkable Places continued.

By Capt. Cooke and Lieut. King.		By Wm. Bayly.		Places Names.	
Latitude	Longitude.	Latitude.	Longitude.		
° ′	° ′	° ′	° ′		
68 56 N	180 51 E	68 56 N	180 46 E	Cape North on the coaſt of Aſia.	
67 3	188 11	67 3	188 0	Serdz Kamen,	Coaſt of Aſia.
66 6	190 22	66 5	190 10	Eaſt Cape, the moſt easterly part of Aſia,	
64 13	186 36	64 16	186 22	Cape Tſchukotſkoi, or Noſs,	
62 50	179 0	62 50	179 10	St. Thadeus's Noſs,	
56 3	163 12	55 59	163 25	Kamtſchatkoi Noſs,	
		55 36	167 46	Behring's Iſland,	
54 28	167 52	54 26	167 59½	Mednoi Iſland,	
54 42	162 17	54 44	162 10	Kronotſkoi Noſs,	
52 51	158 48	52 52½	158 45	Awachia Bay, or St. Peter & Paul, the entrance	
51 21	158 38	51 20	158 34	Cape Gavareea.	
51 0	156 45	51 0½	156 40	Lopatka, or ſouth point of Kamtſchatka,	
				Sandwich Islands.	
20 17 N	204 2 E	20 17 N	204 0	North Point,	At Oeyhee.
18 54	204 15	18 55	204 9	South Point,	
19 34	205 6	19 32	205 10	Eaſt Point,	
20 28	204 0	19 28	203 55½	Keragegooa Bay,	
20 50	204 4	20 51	204 6	Eaſt Point,	At Mowee.
20 34	203 48	20 35	203 45	South Point,	
20 54	203 24	20 53	203 19	Weſt Point,	
20 39	203 33	20 39	203 28	Morokinnee.	
20 38	203 27	20 38	203 20	Tahowrooa.	
20 46	203 8	20 47	203 1	Rannai, ſouth point.	
21 10	202 46	21 10	202 40	Morotai, weſt point.	
21 43	202 9	21 38	201 48	Wooahoo, anchoring place.	
21 57	200 20	21 57	200 21	Oimea Road, at Atowi.	
21 50	199 45	21 49	199 48	Oneehow, anchoring place.	
22 2	199 52	22 4	199 55	Oreehowa.	
21 43	199 36	21 42	199 35	Tahoora.	
				Iſlands in the Chinese Seas.	
24 48 N	141 12 E	24 48 N	141 28	Sulphur Iſland.	
25 14	141 10	25 14	141 18	North Iſland.	
24 22	141 20	24 23	141 28	South Iſland.	
20 58	117 0	20 57	116 55	N. E. Extremity,	The Praters.
20 45	116 44	20 39	116 36	S. W. Extremity,	

Latitudes and Longitudes of moſt of the remarkable Places continued.

By Capt. Cooke and Lieut. King.		By Wm. Bayly.		Places Names.
Latitude.	Longitude.	Latitude.	Longitude.	
° ′	° ′	° ′	° ′	
22 12	113 47	22 12	113 37	Macao, } in China.
22 9⅓	113 48¾	22 9⅓	113 39	Typa, anchoring place, } in China.
15 51	114 20	15 51½	114 16	Part of the Macclesfield Shoal.
10 4	109 10	10 5	109 16	Pulo Sapata.
8 40 N	106 18¾	8 40 N	106 44½	Pulo Condore.
2 40 N	104 37	2 44 N	104 43	Pulo Aor.
2 3 S	105 18	2 3 S	105 27	Monopin Hill, on the iſland of Banka.
3 10½ S	106 15	3 11 S	106 20	Lucipara Iſland.
5 0½	106 12	5 2	106 16	Siſters.
6 6	105 36	6 6	105 36	Cracatoa, — — } in the Straits of Sunda.
6 36¼	105 17½	6 36¼	105 13	Prince's Iſland, } in the Straits of Sunda.
		6 48 S	105 5 E	Java, the moſt eaſterly point, } in the Straits of Sunda.
		58 56 N	3 31½ W	Strumneſs, at the Orkneys.

The uncertainty of diſtances run by the ſhip, of eſtimated diſtances of land, of bearings taken with the beſt compaſſes, and the differences between the bearings taken with different compaſſes, will often occaſion two obſervers to differ conſiderably in their determinations, both of the Latitudes and Longitudes of headlands, and other points ſeen at a diſtance: this will account for the difference of the Latitudes and Longitudes, as determined by Capt. Cooke, Lieut. King, and myſelf.

W. BAYLY.

THE END.

E R R A T A.

Page 4, last line but 2, *for* Long. 10° 20′ 0″ *read* 18° 20′ 0″.
9, for N° 1. losing 3,04 *read* 2,913.
15, last line, *for* 12ʰ 33′ 33″,2 *read* 12ʰ 34′ 33″,2.
19, last line but 3, *after* 6ʰ 18′ 16″ or 23ʰ 50′ 31″ per Clock *read* 6ʰ 8′ 16″ per Clock or 23ʰ 50′ 31″ mean Time.
21, line 4, *for* 5 Feet *read* 5 Inches.
line the last, *for* N° 2. 14ʰ was 10′ 3″,7 *read* N° 2. was 14ʰ 10′ 3″,7.
25, *for* mean Latitude 17° 19′ 58″ S. *read* 17° 29′ 58″ S.
line last but 4, *after* Cook C. *read* see Plate 3d to the Observations of the former Voyage.
28, Sept. 25, in column of Thermometer, *for* 10° *read* 80°.
32, line 18, *for* 5ʰ *read* 5°.
39. line 3, *for* Friendly *read* Society.
40, *for the Month read* November.
42, line last but 2, *for* 27′ *read* 57′.
45, line 2d, *after* King George's Sound *read* called Nootka by the Natives.
53, line the last, *for* ,67 *read* ,37 *and for* ,524 *read* ,481.
62, against June 8, *for* 12″ *read* 12′.
line the last, *for* 7″ *read* 7′.
99, *for* 2″,02 losing *read* 2″,261.
106, line 13 from the bottom, *for* deducted *read* deduced.
107, line last but one, *for* 14ʰ 13′ 56″,1 *read* 14ʰ 13′ 56″,43.
112, line 6 from the bottom, *read* April.
123, line the last, *for* Lunar Observations *read* Capt. King's Journal.
192, at top of the column of Variations, *for* W. *read* E.
193, March 5, *read* S. W. for the Azimuths, *and for* E. *read* W. for the Ship's Long.
in the 3d set, *for* 86° *read* 80° in the Azimuth column. The Variations should be 14° 32′ E., 14 48, 12 36, 12 9
194, 195, and 196, *for* East *read* West Longitude.
196, at top of the column of Variations, *for* W. *read* E.
202, the 8th day, *for* 132° *read* 142° in the Longitude column.
204, the 13th day, line 4, *for* 16° *read* 26° in the Variations.
208, at the head of the Azimuth column, *for* Centre *read* observed.
212, January 16, *for* 4° *read* 1° in the Variation column.
217, at top, *for* the right hand A. *read* B.
219, Feb. 19, *for* 174° 10′ *read* 174° 23′.
235, *after* Islands of Desolation *read* Kerguelen's Land.
243, *for* 443 *read* 243.
255, *for* July *read* January at top.
263, *for* Pulo Candore *read* Pulo Condore.
312, *for* 1777 *read* 1776.
322, Dec. 27, *for* 39° *read* 30° in the Barometer column.
325, April 28, *for* 47° *read* 49° in the Latitude column.
326, June 9, *for* 29° *read* 30° in the Barometer column.
334, at top, *for* 1778 *read* 1779.
335, July 19, *for* 53° *read* 33° in the Thermometer under B.
345, Sept. 13, *for* ,0271 *read* ,0371.
30, *for* ,5366 *read* ,0366.