Compare the "BISSELL" with other disks

Thousands of Canadian Farmers have tested the "Bissell" Disk Harrow in the same field with other makes and found that the "Bissell" HAS THE GREATEST CAPACITY.

The plates on the "Bissell" Harrow are the correct shape. They cut, turn and pulverize the soil where others only scrape the ground and set it on edge. The "Bissell" does clean work where others make a poor job of it.

The "Bissell" Scrapers meet the plates chisel fashion and keep the plates clean. Movable Clod Irons—an exclusive feature — keep the space between the plates clear.

The "Bissell" stays RIGHT DOWN TO ITS WORK. It won't bind, buckle or hump in the centre, no matter how stiff or hard the soil may be. It is built to stand hard usage. The simple method of balancing the driver's weight removes neck weight. It is the Harrow you should know more about.

Write to Dept. W for catalogue with description.

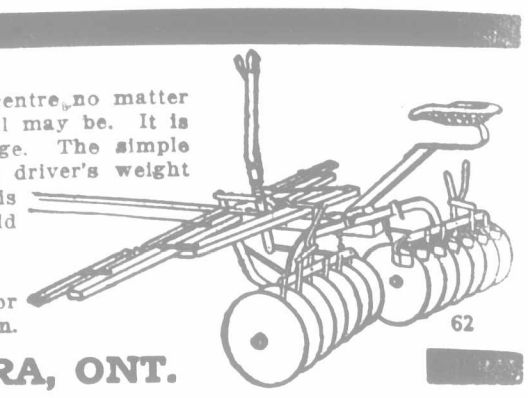

T. E. BISSELL CO., LTD., ELORA, ONT.

Sold Over 850,000 Acres in Five Years

WESTERN LAND FOR SALE

In areas to suit purchasers, from 160 acres upwards, situated on or near railways in the

Best Wheat, Oat and Stock - growing Districts of

SASKATCHEWAN

AND

ALBERTA

450,000 ACRES TO CHOOSE FROM

Prices low. Terms most generous and helpful.

Special Inducements Given Actual Settlers

Our crop payment plan requires no payment on land bought until the purchaser sells his first crop. He can use all his capital for cultivation and improvements.

Write for particulars.

RELIABLE AGENTS WANTED IN EVERY COUNTY.

F. W. HODSON & CO.,
Room 102, Temple Building
Toronto, Ontario, Canada.
Branch Office: North Battleford, Sask.
Sole Agents Canadian Pacific lands.

Which Fence Do You Prefer?

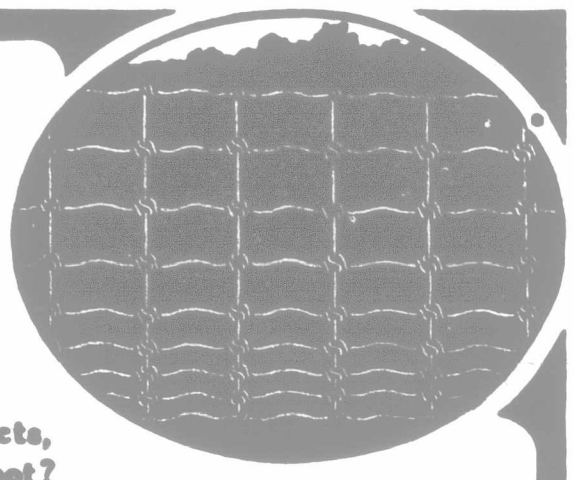

One that protects, or one that does not?

Do you prefer the strong, serviceable, made-to-last IDEAL FENCE which does not take up valuable ground, does not harbor weeds, never needs repairs, saves worry, protects your crop, and which improves the appearance of your farm,

—OR—

Do you prefer to keep that unsightly crooked rail fence which covers too much valuable ground, harbors weeds, causes worry, is really no protection, always in need of repairs, and which certainly detracts from appearance of the farm?

Do you know that you can trade that old unsightly rail fence for IDEAL FENCE, with absolutely no outlay on your part?

Write for our Rail Fence Booklet No. 121 telling you how to do it and giving you valuable fence information.

The McGregor Banwell Fence Co., Ltd.
Walkerville - Ontario

Sugar Makers Attention

Many producers of Maple Syrup think it does not pay to make syrup. Of course it don't, the kind they are producing by using pots and old pans, consuming a lot of fuel and time making black strap. Invest in "Champion" Evaporator and make a syrup that is clean, pure and wholesome. A little of your assistance and you have the best paying proposition on your farm. Made in 22 different sizes. Write today for our latest catalogue.

THE GRIMM MFG. CO'Y
Limited
58 Wellington Street
MONTREAL, QUE.

40 TONS OF PAINT

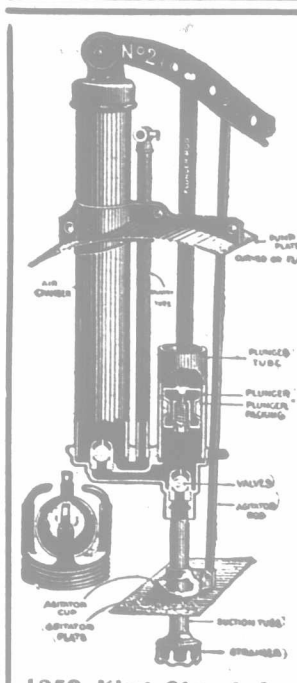

put on the N. Y. C. Stock Yards, Buffalo, with hand SPRAMOTORS.

These wonderful hand machines gave excellent satisfaction, and will do your work well.

They are guaranteed in all sizes. For Painting, Whitewashing, Tree and Crop Spraying, Weed-destroying.

Tell us what use you can put a SPRAMOTOR to, and will send you a useful 88-page treatise free.

Spramotor Limited
1358 King Street, London, Canada

You Can Earn $25 to $100 a Week With This Well-Drilling Machine

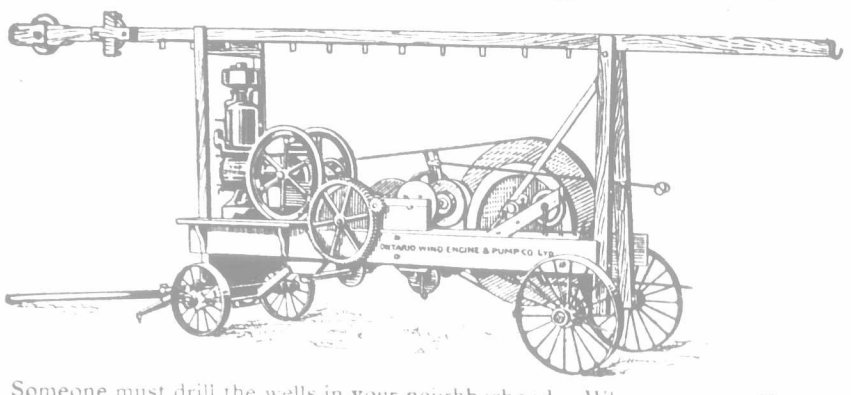

Someone must drill the wells in your neighborhood. Why not you? There's big money in it, if you have the right machine. We can supply machines for all kinds of earth and rock drilling, any depth. Also CASING and general deep-well supplies of all kinds. Be the first to get our money making proposition. Write to-day for full particulars.

ONTARIO WIND ENGINE & PUMP CO., Limited
Winnipeg TORONTO Calgary

160 Acres of Land for the Settlers

Large areas of rich agricultural lands, convenient to railways, are now available for settlement in Northern Ontario. The soil is rich and productive, and covered with valuable timber.

For full information regarding homestead regulations and special colonization rates to settlers, write:

The Director of Colonization
DEPARTMENT OF AGRICULTURE
TORONTO.

HAVE YOU A POOR EDUCATION?

You will find our Beginner's Course just what you need. Instruction in Penmanship, Spelling, Arithmetic, Geography, Composition, Grammar, right from the beginning. So plain that anyone can learn it. Ask for circular.

Canadian Correspondence College, Limited
Dept. E. Toronto, Canada.

Corn that Will Grow

Canadian-grown seed corn. Your money back if not satisfied.

J. O. DUKE, RUTHVEN, ONTARIO

EUREKA Harness

MAKES YOUR HARNESS LAST A LIFETIME

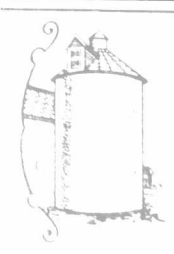

BUILD CONCRETE SILOS

Any size with the London Adjustable Silo Curbs. Send for Catalogue. We manufacture a complete line of Concrete Machinery. Tell us your requirements. **LONDON Concrete Machinery Co'y. Limited, Dept. B, London, Ont.**
Largest manufacturers of Concrete Machinery in Canada.