a mill, the combination with the main casing and the knife carrying cutting discs, one of which is revoluble with respect to the other, of the serrated feeding plate concentric with the revoluble disc, a series of stationary knives arranged concentric with the serrated plate, a revoluble knife carried by said revoluble disc adapted to pass between said serrated feeding plate and the stationary knives, a screening chamber communicating with said casing, and provided with a vertical screen having its lower end adjacent to the lower portions of said feeding plate, and stationary knives, said screening chamber being provided with a discharge aperture in the top thereof on the side of the screen nearest the revoluble disc, and a discharge aperture on the other side of the screen, adjacent to the bottom of the chamber, a valve for regulating or closing the upper discharge aperture, an air inlet for for said chamber discharging adjacent to the revoluble disc and fan blades carried by said revoluble disc, substantially as described.

No. 68,898. Metal Working Apparatus.

(Appareil à travailler le métal.)

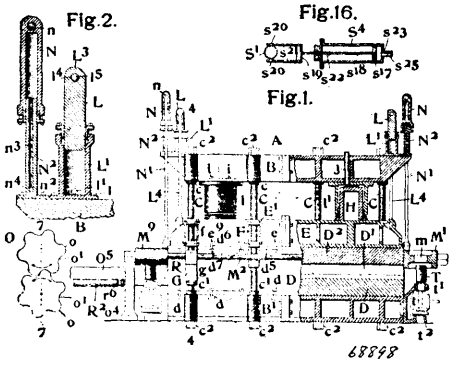

The Merrill Process Steel Company, St. Louis, Missouri, U.S.A., assignee of George Spencer Merrill, 4th October, 1900; 6 years. (Filed 10th January, 1899.)

Claim.—1st. The process of renewing old, worn, rolled or drawn metallic articles in whole or in part, and increasing the average cross sectional area of the part renewed, consisting in first heating the article treated, to a heat not lower than a red heat and not high enough to injure the metal therein; then enlarging the average cross sectional area of the part to be used again beyond the ultimate cross sectional area desired, and next giving the part whose average cross sectional area has been enlarged, the desired shape, and a uniform cross sectional area throughout. 2nd. The process of increasing the cross sectional area of metal rails and analogous articles, consisting in forming in each article treated a series of crimps, and after crimping it, subjecting it to transverse pressure, substantially in the plane of its crimps, while limiting its movement at an angle to the direction in which pressure is applied, and the longitudinal movement of its ends, and so transforming a part of the transverse pressure applied, into longitudinal pressure. 3rd. The process of increasing the cross sectional area of metal rails and analogous articles, consisting in heating each article treated to a heat not lower than a red heat and not high enough to injure the metal therein, forming in each, a series of crimps in substantially the same plane, and subjecting each crimped rail or other article while at a temperature not lower than a red heat, to transverse pressure, substantially in the plane of its crimps, while limiting its movement at an angle to plane of its crimps, and the longitudinal movement of its ends and so transforming a part of the transverse pressure applied, into longitudinal pressure. 4th. The process of increasing the cross sectional area of metal rails and analogous articles, consisting in forming in each article treated a series of lateral crimps in substantially the same plane, and subjecting each crimped article to transverse pressure substantially in the plane of its crimps while limiting its movement, at an angle to the plane of its crimps, and the longitudinal movement of its ends, and governing the transverse flow of the metal therein, and so transforming a part of the transverse pressure applied into longitudinal pressure and increasing its cross sectional area and giving it a substantially uniform size and shape in cross section throughout simultaneously, substantially as described.

No. 68,899. Telephone Switchboard Signal.

(Signal d'échange de téléphone.)

The Bell Telephone Company of Canada, Montreal, Quebec, assignee, Joseph John O'Connor, Chicago, Illinois, U.S.A., 4th October, 1900; 6 years. (Filed 21st March, 1900.)

Claim.—1st. A party line ringing appliance for telephone switchboards comprising a master key having switch contacts operated thereby for changing the cord circuit connections, auxiliary keys having subsidiary switch contacts operated thereby, each of said auxiliary keys being adapted when actuated to operate the master keys as well as its particular subsidiary switch contacts, suitable sources of signaling current being connected with the said subsidiary

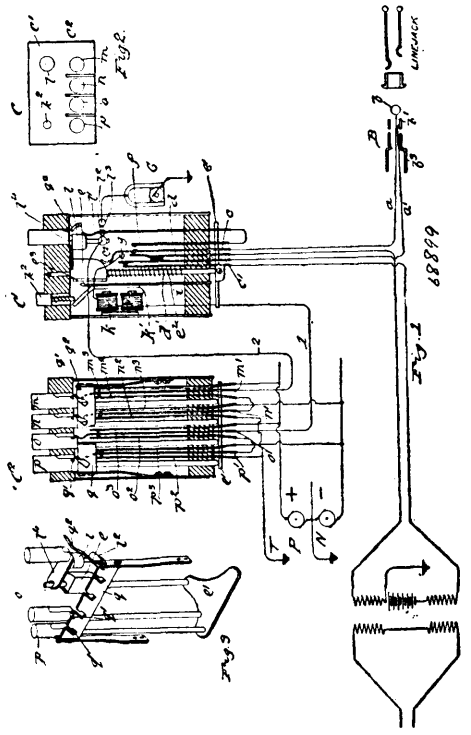

contacts, and interlocking mechanism, brought into play by the depression of either of the auxiliary keys, for preventing the depression of any other auxiliary key, substantially as set forth. 2nd. In a signaling apparatus for telephone switchboards, the combination with a plug for making connection with a telephone line springjack, of a cord circuit whereof said plug is the terminal, a master key for connecting a strand of the cord circuit with a contact associated with the said master key, sources of signaling current, auxiliary switch keys adapted to connect a source of signaling current with the said contact, and means, operated by the actuation of either of the auxiliary keys, for actuating the master key, substantially as described. 3rd. In a signaling apparatus for telephone switchboards, the combination with a conductor adapted to be connected with a telephone line, of a master key and switch contacts actuated thereby for breaking the continuity of said conductor and connecting the severed end thereof, which leads to the plug, with a contact *f*, a source of signaling current G, an auxiliary switch key *l* adapted to connect said source of signaling current with the contact *f*, a mechanical connection between the master key and the auxiliary key, whereby the auxiliary is adapted when actuated to operate simultaneously the master key, and other auxiliary keys for connecting other sources of current with the contatt *f*, substantially as set forth. 4th. In a signaling apparatus for telephone switchboards, the combination with a connecting plug having two contact surfaces for making electrical connection with the two limbs of a telephone line, of a cord circuit having two strands, of which the said contact surfaces are terminals, a master key adapted to break the continuity of the said strands and to connect the severed terminals thereof, which lead to the plug, with contact pieces *f g* of the master key, sources of current of different characters, and auxiliary keys each adapted when actuated to operate the master key and to connect one of the sources of current with one or the other of the said contact pieces *f g*, substantially as set forth. 5th. In a signaling apparatus for telephone switchboards, the combination with a plug for making connection between a switch cord conductor and the springjack of a telephone line, of a master key adapted when actuated to connect the cord conductor with a contact piece of the key, sources of current of differing character, and auxiliary keys each adapted when actuated to operate the master key and to connect one of the sources of current with the said contact piece, substantially as described. 6th. The combination with a plug for making connection with a telephone line springjack, of a cord conductor of which the plug is a terminal, a master key for effecting changes in the cord circuit, subsidiary circuits connected with the master key, and a series of auxiliary keys, each adapted when actuated to operate the master key and to effect changes in said subsidiary circuits, substantially as described. 7th. The combination with a telephone line having a plurality of substations connected therewith, of a signal receiving instruments, one for each substation, each adapted to respond to current of a peculiar or distinctive character, sources of current, a