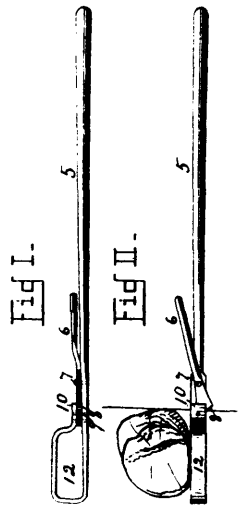

30815 Warner's Wire Stretcher.

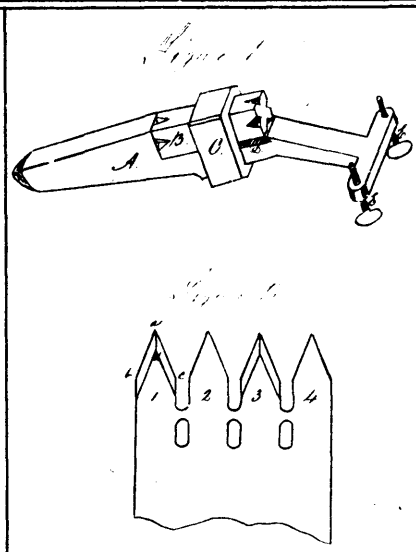

30816 Stewart's Saw Set.

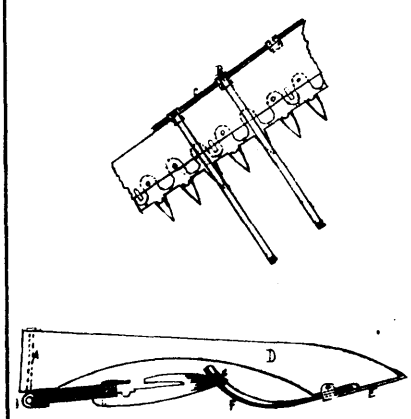

30817 Richmond's Cutter Bar for Reapers, etc.

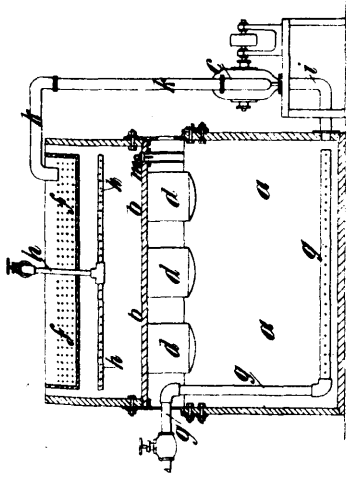

30818 Lee & Bradshaw's Apparatus for Dyeing Textile Materials.

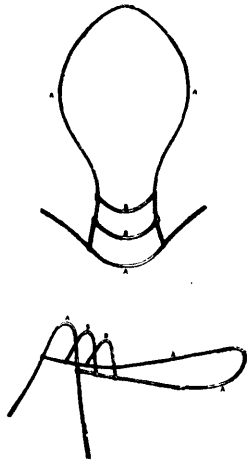

30820 Keen's Saddle-Tree and Panel.

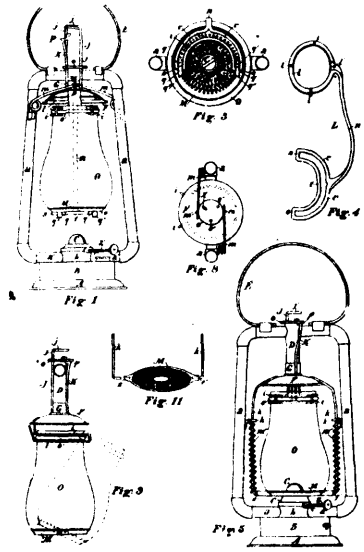

30821 Jewell's Lantern.

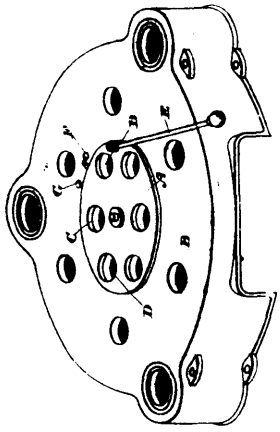

30822 Gurney's Hot Water Boiler.

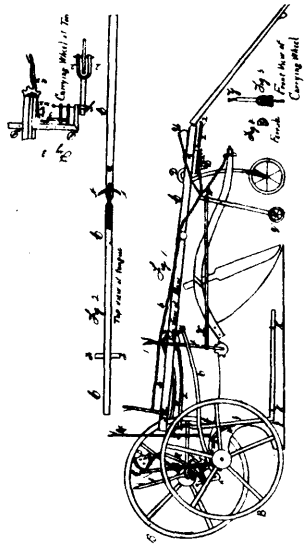

30823 Coon's Sulky Plough.

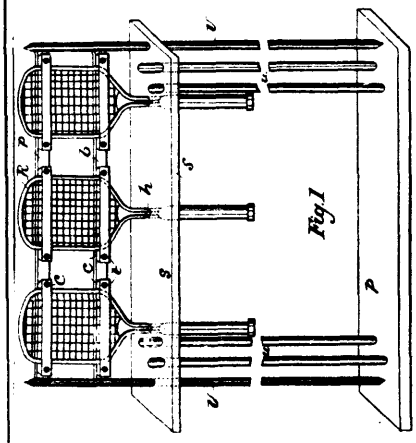

30824 Holmes' Racket Holder and Press.