ON FINGERING.

To produce the stopped notes, the joint of the Left hand fingers must be squared, and the strings pressed down *firmly* and *held* upon the Finger-board, with the *ends* of the fingers just behind the Fret indicated; always keep the fourth finger *above* and *over* the Finger-board.

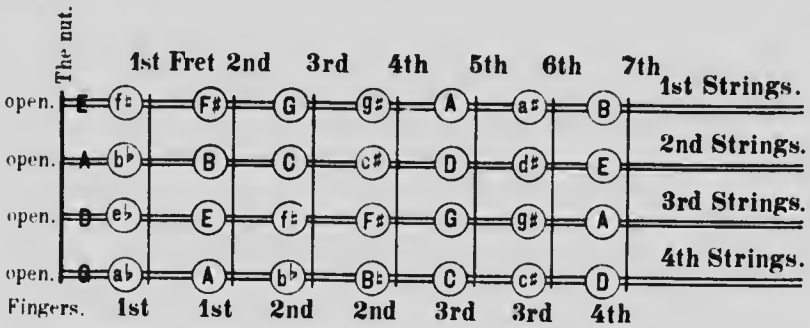

The above diagram shows the relative positions of the notes on the Finger-board, in the *first* position. The capital letters indicate the *natural scale of the* ***Mandoline;*** that is, the scale of G, with one sharp. The notes D, A & E, can be produced in two ways, either open, or with the fourth finger behind the *7th Fret*; the latter should be used in preference to the former, unless the note is marked with an o *(open)*.

THE CHROMATIC SCALE.

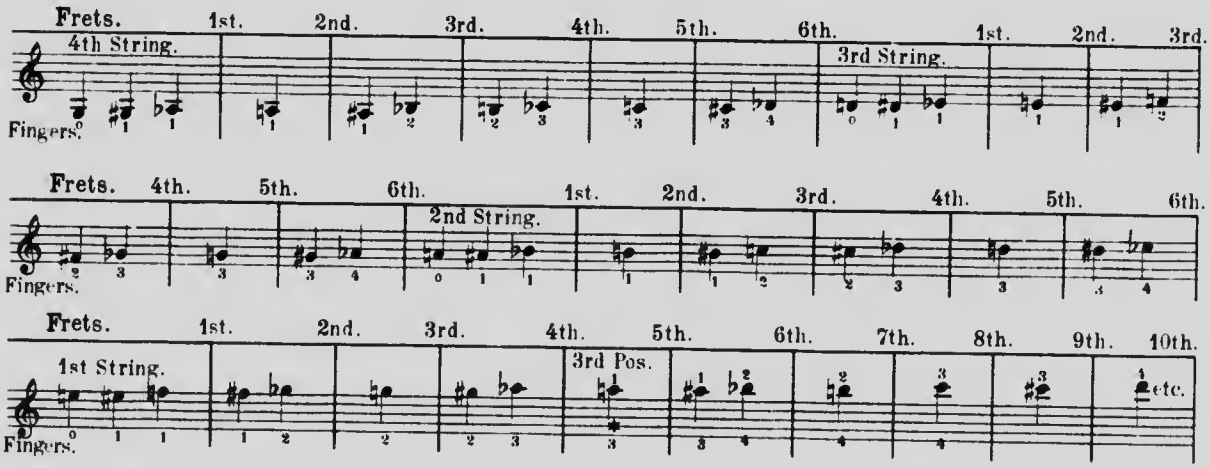

The Student will observe that any semitone can be produced; the above scale may be referred to whenever at a loss for any particular note.

* From this note the hand may be placed in the third position, or in other words, the first finger may take the place of the third finger behind the *5th Fret*, the other fingers following, this change of fingering will be found very useful on all the strings.