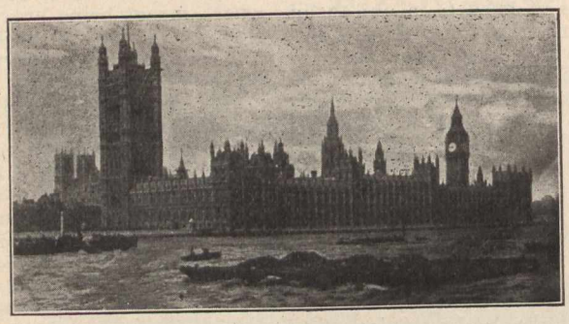

British Houses of Parliament.

GREAT BRITAIN.

Reversing Elastic Fluid Turbine.—George Westinghouse, Pittsburgh, P.A.—16,542.—This invention relates to elastic fluid-pressure turbines, and more particularly to such turbines which are applicable to marine propulsion, and designed to act as reversing engines. The claims are as fol-

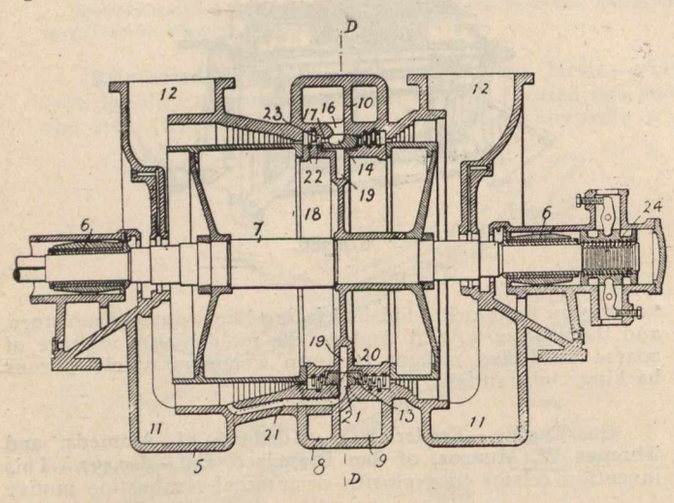

(Fig. 1.)

lows:—"(1). In an elastic fluid pressure turbine having an 'ahead' portion and an 'astern' portion, two intervening seals between said portions and a fluid-collecting chamber common to both seals, the arrangement of a conduit in the tur-

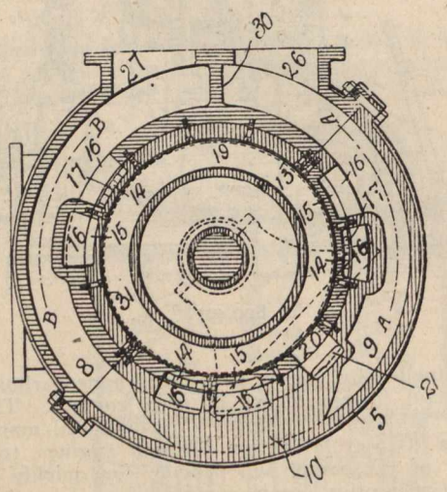

(Fig. 2.)

bine casing communicating with said chamber for conducting the leakage fluid to an operative point of the turbine, substantially as described with reference to the accompanying drawing. (2) For a reversing elastic fluid-pressure tur-

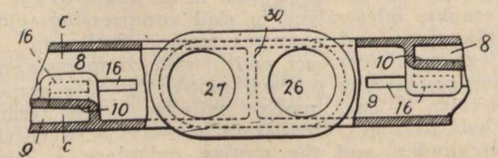

(Fig. 3.)

bine a nozzle ring provided with two steam spaces and a plurality of admission nozzles discharging from each steam space, the nozzles from one steam space discharging in the opposite direction to the nozzle from the other steam space so that the direction of rotation of the turbine will vary according to the space selected for the supply of steam substantially as described. (3) In a reversing elastic fluid-pressure turbine the general arrangement of inlet passages, admission nozzles, collecting chamber and conduit for conducting the leakage fluid to an operative point of the tur-

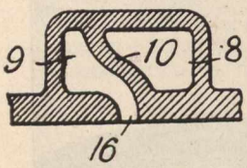

(Fig. 4)

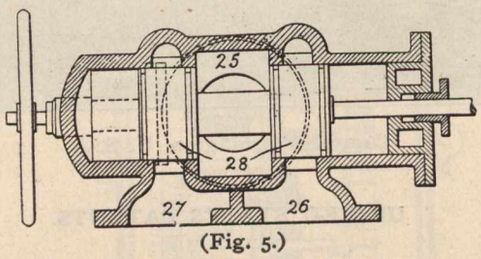

(Fig. 5.)

bine, as described with reference to the accompanying drawings."

Hot-Blast Stoves.—J. Evans and D. Lewis, Merthyr Tydfil.—5,975.—A hot-blast stove according to this invention is supported by pillars or columns, so that there is a space between its bottom or floor, and its bottom or floor has formed through it openings that are closed by suitable doors or covers, and through which the flue-dust can be caused to pass without its being necessary to enter the

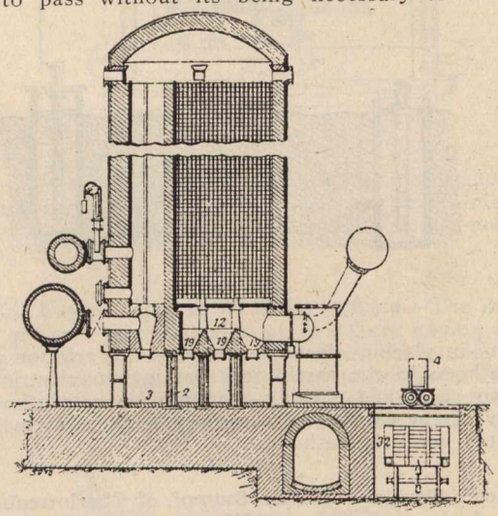

5,975.

stove or to take the dust out from the bottom of the floor by hand in the usual manner. The floor of the stove rests upon a number of cast-iron columns or pillars 2, and is supported by them at such a height above the ground-level 3 as to enable a man and a dust-trolley 4 to pass beneath the floor of the stove. The floor of the regenerative chamber 12 is formed with a number of adjacent hopper-like depressions 19, the bottom of each of which terminates in an opening closed by a door. Each adjacent two hopper-like depressions 19 are separated from each other by only a sharp ridge, so that all dust passes to the openings. Underneath the stove are arranged rails, upon which run the small trolleys 4 that receive the flue-dust discharged through the openings in the bottom or floor of the stove; these rails extend over a dock 32, in which are rails forming a track of ordinary gauge, into which the trolleys 4 discharge.

INDUSTRIAL NOTES.

Sturtevant generating sets, equipped with enclosed, forced-lubrication engines, are being installed by the Canadian Fairbanks Co., Limited, Toronto, Ont.

W. A. Milne & Co. have placed an order with the Smart-Turner Machine Co., Limited, Hamilton, for a side-suction centrifugal pump.

The Smart-Turner Machine Co., Limited, Hamilton, have received an order for a duplex ballast pump from the Collingwood Shipbuilding Co.

The Canadian Machine Telephone Co. are installing their system in Edmonton, Alberta. The complete system will comprise 2,000 telephones, 700 of which will be installed this year.