extending through said slot and serving to secure the arm adjustably to its support, of a second arm, pivotally attached to the forward end of said first mentioned arm having a forwardly projecting stud and an upwardly projecting lug, an adjusting rod threaded in one of said lugs and extending loosely through the other lug, a spring encircling said rod between the lug, a frame adjustably mounted on the stud, and a presser roller journalled in the frames, as and for the purpose set forth. 19th. The combination, in a cigar rolling machine, with rollers for supporting the bunch, of a forwardly and rearwardly adjustably arm, a second arm pivotally mounted on said first mentioned arm, means for adjusting the inclination of the second. arm, relatively to the other arm, a frame carried by the second and adjustable forward and rearward thereon, and a presser roller journalled in said frame, as and for the purpose set forth. 20th. The combination, in a cigar rolling machine, with the rollers for supporting the bunch, of a pivoted arm having a bifurcated front end, a shaft extending across said front end of the arm, adjustable arms 118 pivotally mounted on the ends of said shaft means for holding the latter arms independently in adjustable position, separate frames independently adjustable forward and rearward on said arms 118, and rollers journalled in said frame, as and for the purpose set forth. 21st. The combination, in a cigar rolling machine, with a shaft 15, a carriage thereon, means for driving said shaft, two roller carrying shafts journalled in said carriage, one being slightly above and rearward of the other, gears on the ends of said shafts, a gear on said shaft 15 meshing with each of the other gears, and a roller 20 frictionally engaged with a roller on one of said shafts, of a pair of rollers, 30 and 31 arranged end to end above the lower of said previously mentioned rollers and frictionally engaged with said roller 20, and a pivotally supported arm carrying said rollers, 30 and 31, as and for the purpose set forth. 22nd. The combination, in a cigar rolling machine, with the driving shaft, a second shaft having a lengthened key-way, said shafts being geared together, a worm on the driving shaft, a carriage loosely mounted on said second shaft, and having a lug engaged with the worm, and a gear on said second shaft movable with the carriage and having a key transversing the lengthened key-way, of a pair of rollers mounted on shafts journalled in said carriage gears on the ends of said roller shafts, both of said gears intermeshing with the gear on said second shaft, a third roller frictionally engaged with one of said pair of rollers, a pair of rollers arranged end to end both in frictional engagement with said third roller, a pivoted arm supporting the latter pair of rollers, and connections between the pivoted arm and the carriage, whereby the tilting of the arm first raises the pair of rollers carried thereby and finally turns the carriage upon its shaft 15, as and for the purposes set forth. 23rd. In a cigar rolling machine, means for supporting and rotating the bunch, said means containing a frictionally driven roller, a normally stationary shaft having an eccentrically set cylindrical part on which the roller turns, and means whereby the shaft may be turned in the bearing, as and for the purpose set forth. 24th. In a cigar rolling machine, the combination with bunch supporting rollers, of a roller 20 driven by frictional engagement with one of such rollers, a roller driven by the roller 20, a normally stationary shaft having an eccentrically set cylindrical portion on which the roller 20 turns, and means whereby the shaft may be turned in its bearing, as and for the purpose set forth. 25th. In a cigar rolling machine, means for supporting and rotating the bunch, said means containing a frictionally driven roller, a shaft having an eccentrically set cylindrically portion within the roller and on which the latter turns, a split sleeve supported on the machine and in which the shaft may be turned, and a screw to clamp the sleeve on the shaft and prevent the latter from turning in the former, as and for the purpose set forth. 26th. In a cigar rolling machine, the combination with a movable carriage, rollers 18 and 19 carried thereby and arranged one above and rearward of the other, rollers 30 and 31 arranged end to end, and a pivotally supported arm 36 carrying said rollers 30 and 31, of a roller 20 frictionally engaged with each of said rollers 19, 30 and 31, a normally stationary shaft having an eccentrically set cylindrical portion on which the roller 20 turns, and means whereby the shaft may be turned in its bearing to cause the roller 20 to bear with greater or less pressure upon the rollers 19, 30 and 31, as and for the purpose set forth. 27th. In a cigar rolling machine, the combination with the wrapping mechanism, of a severing knife, an operating lever to which said knife is pivoted, a spring connecting said lever and knife, and a stationary arm adjacent to the cutting point of said knife, whereby the knife will operate to make a draw cut, as and for the purpose set forth. 28th. In a cigar rolling machine, the combination with the wrapping mechanism, of a knife having an elongated slot at one end, a thumb lever having a vertical portion, a pivot for the vertical portion of the lever said pivot extending the elongated slot and the knife and vertical portion of the lever being pivoted together, a spring connection between the knife and lever, and relatively a stationary arm adjacent to the cutting portion of the knife, whereby the knife acts on said arm with a draw action, as and for the purpose set forth. 29th. In a cigar rolling machine, the combination with the wrapping mechanism, and a plate adjacent thereto at the header end of the machine, said plate having a tip forming cavity and being provided with a horizontally projecting arm of a knife having an elongated slot at the end, a thumb lever having a vertical portion pivoted on a stud projecting through said slot into the plate, the knife and lever being pivoted together, a spring connecting the knife and lever together, as described, whereby the knife will operate on the horizontal arm of the plate with a draw action, as and for the purpose set forth. 30th. In a cigar rolling machine, the combination with the driving shaft, the carriage carrying presser rollers, and means for rotating said presser rollers simultaneously with the rotation of the driving shaft, of a worm on said driving shaft and a lug projecting from the carriage, the worm and lug being normally out of engagement when the carriage is at rest at its starting point, whereby the shaft will rotate before the worm is operatively engaged with the lug, as and for the purpose set forth. 31st. In a cigar rolling machine, the combination with the driving shaft, and the carriage carrying presser rollers, of a worm on said driving shaft, and a spring pressed movable lug projecting from said carriage and engaged by the worm, as and for the purpose set forth. 32nd. In a cigar rolling machine, the combination of the pivotally mounted carriage carrying presser rollers, a worm, a spring pressed movable lug projecting from said carriage and engaged with the worm, and means for tilting the carriage to disengage the lug from the worm, as and for the purpose set forth. 33rd. In a cigar rolling machine, the combination of the pivotally-mounted carriage carrying the presser rollers, a projection from the carriage having a grooved way, a lug having an arm movably mounted in said way, a spring engaging one end of the arm and a stop at the other end thereof, a worm engaged by said lug, means for tilting the carriage to disengage the lug from the worm, and means for returning the caraiage to the starting place when the lug and worm are disconnected, as and for the purpose set forth. 34th. In a cigar rolling machine, the combination with the roller carriage, and means for feeding the same, of a wrapper holder, a pivoted lever connected with said wrapper holder, and a stop plate acting on said lever to withdraw and replace the wrapper holder, as and for the purpose set forth. 35th. In a cigar rolling machine, the combination with the roller carriage and means for feeding the same of a wrapper holder comprising a longitudinally movable rod supported in the carriage, a bent wire having one end journalled in the inner end of said rod, a lever pivoted between its ends on a support movable with the carriage and having its upper end adjustably attached to the rod and its lower end bifurcated and bent in reverse directions, and a longitudinally adjustable plate on a fixed part of the machine having a bent end arranged in the path of the lower end of said lever and operating thereon to withdraw and replace said wrapper holder, as and for the purpose set forth.

No. 61,559. Electric Furnace and Method of Operating the Same. (*Fournaise électrique et méthode d'opération.*)

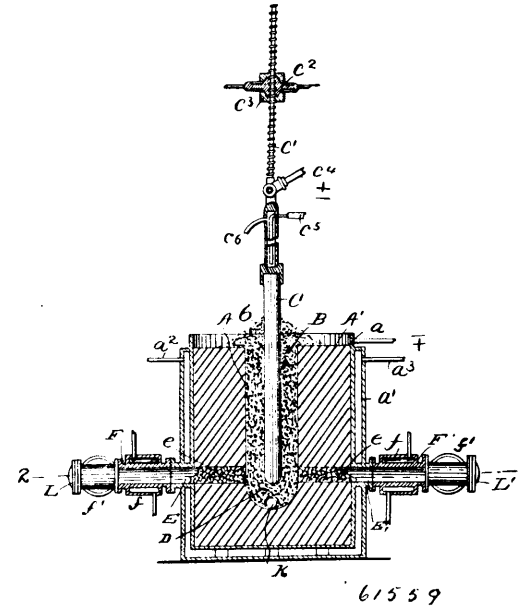

A. H. Cowles, Cleveland, Ohio, U.S.A., 2nd November, 1898; 6 years. (Filed 25th May, 1898.)

Claim.—1st. The method of treatment of ores or other compounds or mixtures of material of low conductivity herein described, which consists in passing an electric current and generating within the mass of the material electrical heat, and in periodically passing gas therethrough in opposite directions, as and for the purpose set forth. 2nd. The combination in an electric furnace, of an electric furnace chamber with gas inlet and outlet flues or passages and a reversing valve connected with the said inlet and outlet flues or passages and adapted to change the direction of the flow of gas through the electrically heated field of the furnace chamber, as and for the purpose set forth 3rd. In an electric furnace, a furnace chamber adapted to be charged at the top and having a central adjustable electrode extending down into the chamber, lateral gas inlet and