No. 68,577. Electrostatic and Diamagnetic Separation. (*Séparateur.*)

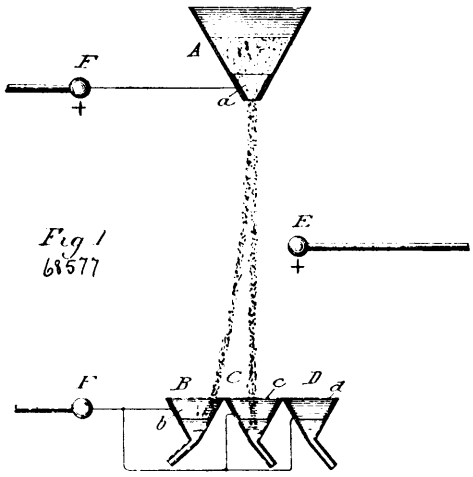

Theodore J. Mayer, Washington, District of Columbia, assignee of Elmer Gates, Chevy Chase, Maryland, U.S.A., 30th August, 1900; 6 years. (Filed 10th July, 1900.)

Claim.—1st. The method of separating from a mixture particles of relatively greater electrostatic capacity than the remainder, which consists in passing the mixture through a field of convective discharge of static electricity, thereby charging said mixture electrostatically, and diverting the particles of greater electrostatic capacity by causing the electrified mixture to pass through another field of convective discharge of static electricity, the direction of whose lines of force intersects that of the first, substantially as described. 2nd. The method of separating from a mixture particles of relatively greater electrostatic capacity than the remainder, which consists in passing the mixture through a field of convective discharge of static electricity, thereby charging said mixture electrostatically, and diverting the particles of greater electrostatic capacity by causing the electrified mixture to pass through another field of convective discharge of static electricity, the direction of whose lines of force intersects that of the first, and whose discharge terminal is located midway between the terminals of the first, substantially as described, 3rd. The method of separating diamagnetic particles from a mixture containing them, which consists in feeding the mixture into a relatively intense part of a magnetic field, simultaneously charging the mixture electrostatically, and subjecting the electrostatically charged mixture to the action of the magnetic field until the diamagnetic particles to be separated have gradually moved out from the mixture into a relatively weak part of the field, and then collecting said particles as heads, substantially as described.

No. 68,578. Trace Support. (*Porte-traits.*)

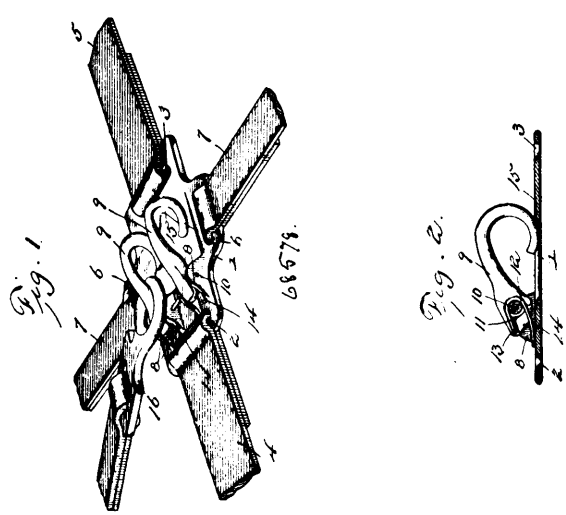

George Schenck, Le Roy, Kansas, U.S.A., 30th August, 1900; 6 years. (Filed 18th August, 1900.)

Claim.—1st. A trace support, comprising a frame, having a guide plate, which is inclined inwardly and downwardly, and a spring actuated hook, pivoted to the frame at a point above the plane of the guide plate, the free extremity of the bill of the hook normally resting upon the inclined guide plate. 2nd. A trace support, comprising a frame, having upstanding bearing ears located at the forward end thereof, an inwardly and downwardly inclined guide plate located at the rear of the frame, and spring actuated hooks, having their shanks pivoted to the bearing ears and above the plane of the guide plate, and the free extremities of the bills of the hooks normally resting upon the inclined guide plate.

No. 68,579. Cream Separator (*Séparateur pour la crême.*)

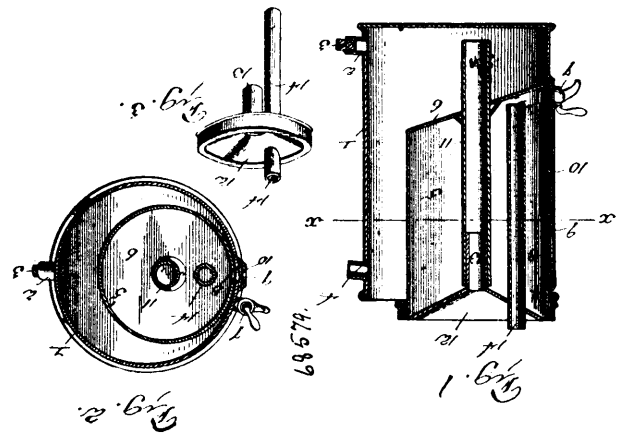

James M. King, Nebraska City, Nebraska, U.S.A., 30th August, 1900; 6 years. (Filed 18th August, 1900.)

Claim.—1st. A cream separator, comprising an outer receptacle, an inner receptacle having a tube or passage open at its upper end to receive water, and communicating through the inner receptacle and with the outer receptacle, a milk tube or passage, carried by the inner receptacle, and discharging at or near the lower end thereof, and means for drawing off the liquid contents of the inner receptacle, and located at or near the bottom thereof, substantially as and for the purpose described. 2nd. A cream separator, comprising an outer receptacle, and an inner receptacle having a dished top or cover, a tube communicating with an opening formed in the top or cover and also opening into the interior of the outer receptacle, a milk inlet tube extending through the top or cover, and means for drawing off the liquid contents of the inner receptacle, substantially as shown and described. 3rd. A cream separator, comprising an outer receptacle, and an inner receptacle having a vertical tube projecting in opposite directions through the bottom thereof, a removable funnel-shaped cover having its spout communicating with the upper end of the tube, and also a vertical tube extending in opposite directions through the cover, and means for drawing off the liquid contents of the inner receptacle, substantially as shown and described. 4th. A cream separator, comprising an outer receptacle, an inner receptacle fixed to one side of the outer receptacle and spaced above the bottom thereof, the contiguous sides of both receptacles being provided with vertically aligned and glass covered slots, a central tube extending in opposite directions through the bottom of the inner receptacle, a removable funnel-shaped cover for the inner receptacle, the spout of the cover communicating with the upper end of the central tube, a vertical tube extending in opposite directions through the cover and terminating at its lower end near the bottom of the inner receptacle, and a valve or spigot located exteriorly of the device, near the lower end of the inner receptacle, and communicating with the interior of the latter, substantially as and for the purposes set forth.

No. 68,580. Knife. (*Couteau.*)

Isaac Hirsch, Chicago, Illinois, U.S.A., 30th August, 1900; 6 years. (Filed 12th July, 1900.)

Claim.—1st. The method of forming the handle and bolster portions of an article of cutlery, which consists in stamping two scales, which fitted together form said portions, out of sheet metal, forming the cutlery blade with a flat tang of the width and outline of the inner edges of the scales, fastening the scales against opposite sides of the blade, to house and contact with the edges of the tang, and then securing the parts together and hermetically sealing all the joints between them with molten metal, substantially as set forth. 2nd. The method of forming the handle and bolster portions of an article of cutlery, which consists in stamping two scales, which fitted together f rm said portions, out of sheet metal, forming the cutlery blade with a flat tang of the width and outline of the inner edges of the scales, fastening the scales against opposite sides of the blade, to house and contact with the edges of the tang, providing a vent